US ARMY
AIR DEFENSE SCHOOL
Fort Bliss, Texas 79916

MARCH 1972

AIR DEFENSE TRENDS

AIR DEFENSE TRENDS
US ARMY AIR DEFENSE SCHOOL
Fort Bliss, Texas 79916

IN THIS ISSUE

Page

Cover 1
Air Defense Trends 2
US Army Air Defense School 3
US Army Air Defense Center and Fort Bliss 3
1st Advanced Individual Training Brigade 4
11th Air Defense Artillery Group 4
Headquarters Command 4
Range Command 4
US Army Air Defense Board 4
US Army Combat Developments Command Air Defense Agency 4
US Army Air Defense Human Research Unit, Human Resources Research Organization 4
Air Defense Trends Editorial Staff 5
Editorial 6
Letters to the Editor 8

US ARMY AIR DEFENSE SCHOOL NOTES
Office of Doctrine Development, Literature, and Plans 13
Command and Staff Department 16
Nonresident Instruction Department 18

NOTES FROM US ARMY AIR DEFENSE CENTER AND FORT BLISS 19

NOTES FROM THE US ARMY COMBAT DEVELOPMENTS COMMAND AIR DEFENSE AGENCY 25

NOTES FROM THE HUMAN RESOURCES RESEARCH ORGANIZATION 27

WILLIAM BEAUMONT GENERAL HOSPITAL (FIFTY YEARS OF SERVICE) 28

AIRSPACE COORDINATION—A FLAW IN ARMY OPERATIONS 31

TALKEYE (A UNIQUE BATTLEFIELD IDENTIFICATION/COMMUNICATIONS SYSTEM) 34

DID YOU KNOW? 42

THE TOW MISSILE SYSTEM 50

MODERN VOLUNTEER ARMY AND THE RESERVE COMPONENTS 54

111030

Page

HISTORY OF AIR DEFENSE 57

SAM-D MISSILE PASSES FINAL TEST 65

WORLD MISSILES 1971 66

THE ALL AMERICAN DIVISION GOES ADA - "ALL THE WAY" 86

1ST OF 44TH STANDS DOWN IN VIETNAM 92

OPERATIONAL LESSONS LEARNED 94

RESISTORS 97

MOVEMENT OF MOBILE HOMES 98

READER'S CORNER
Current Books and Articles of Military Interest 99

INDEX 103

AIRCRAFT RECOGNITION 110

Air Defense Trends is an instructional aid of the United States Army Air Defense School; it is published when sufficient material of an instructional nature can be gathered.

Deputy Assistant Commandant Retires

Colonel John E. Connor, Jr, retired 31 January 1972 after having served as Deputy Assistant Commandant of the US Army Air Defense School since April 1971. Colonel Connor is a native of Dover, Delaware. He graduated from the University of Delaware and later acquired a master's degree in International Affairs at George Washington University. Colonel Connor also attended the Command and General Staff College, Armed Forces Staff College, Army War College, and National War College.

His wartime service includes the Panama Canal Zone, Europe, and Korea. Colonel Connor has been awarded the Legion of Merit with three Oak Leaf Clusters, Bronze Star Medal, Air Medal with two Oak Leaf Clusters, and the Army Commendation Medal.

Colonel Pettigrew Is New Deputy Assistant Commandant

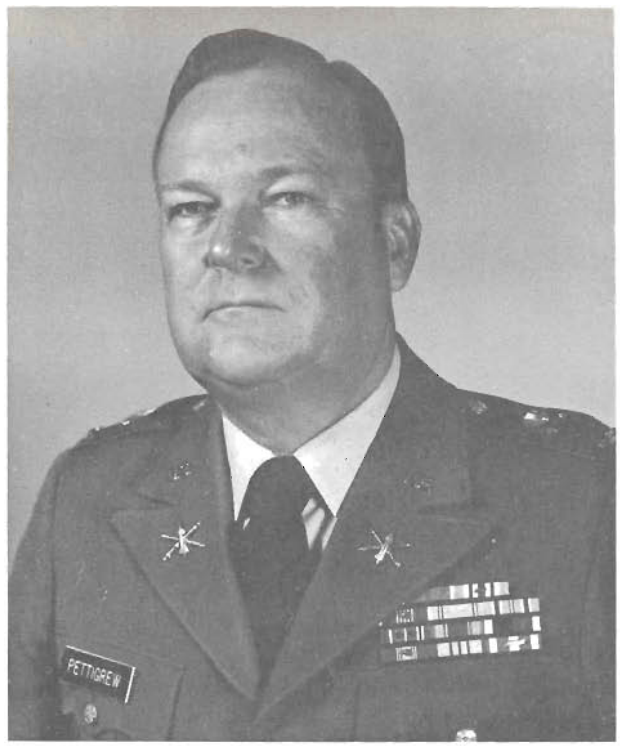

Colonel Dee W. Pettigrew, Jr, was appointed Deputy Assistant Commandant of the US Army Air Defense School on 1 February 1972 after having served as Director, Office of Doctrine Development, Literature, and Plans for 18 months. Colonel Pettigrew entered the US Military Academy after having attended Hendrix College in Conway, Arkansas. He graduated from West Point in the class of 1944 with a commission in the Field Artillery. He later obtained a Master of Science degree in Aeronautics and Guided Missiles at the University of Southern California.

Most of Colonel Pettigrew's experience has been in the field of guided missiles, including membership on the Field Artillery Board, service as a research and development staff officer at North American Air Defense Command, and Chief, Air Defense and Missile Division, Office of the Chief of Research and Development, Department of the Army. He also served as Senior advisor to the Vietnam National Military Academy; Chief, Military Assistance Advisory Group, Republic of Mali; and Chief, Army Section, Military Assistance Advisory Group, Spain. Colonel Pettigrew has been awarded the Legion of Merit, Joint Service Commendation Medal with Oak Leaf Cluster, Army Commendation Medal with Oak Leaf Cluster, and various campaign and service medals.

COVER Consider the relief a forward area gunner confronted with approaching fighter planes would feel if he had a pair of binoculars with identification, friend or foe (IFF), capability. Add to this device a built-in voice communication capability and you have Talkeye, a set of 7x50 field binoculars converted into a reliable IFF and voice communication system by General Dynamics Electro Dynamic Division, Pomona, California. Pictured here is a working version of Talkeye. Refinements are in process. Because it operates on the laser principal, the instrument is called the laser IFF system. In addition to Redeye and Chaparral/Vulcan, the laser IFF system can be employed effectively with the TOW (tube-launched, optically tracked, wire-guided missile) antitank missile and in tank-to-tank and air-to-ground engagements. Some of the facts about the instrument are classified; nevertheless, we are able to provide a substantial report on its structure and employment. Further information about this new and promising development in forward area IFF appears on page 34.

It was not the military power of the barbarian hordes hammering at the gates of Rome which brought down to dust that civilization which had stood for a thousand years. Rome was finished long before the enemy finally attacked. It was finished because the character of its people had deteriorated.

Those who should have been caring most about preserving the integrity of their civilization were more concerned about the pursuit of pleasure. They committed themselves to complacency, laziness, and rich living. They forgot the ideals of courage, industry, and morality which had made Rome master of the known world. When there were rumors of trouble, they assured themselves that it was no concern of theirs—the legions would take care of it—and turned once more to the banquet and the bath.

Rome fell because the individual Roman citizen forgot his own unshirkable moral and physical responsibility for the defense of the state, not only on the battlefield but in every aspect of life.

Let us take heed of history.

—*Wilbur M. Brucker*

AIR DEFENSE TRENDS

An instructional aid of the United States Army Air Defense School, Air Defense Trends is published when sufficient material of an instructional nature can be accumulated. It is designed to keep air defense artillerymen informed of unclassified tactical, technical, and doctrinal developments because it is essential to national defense that all levels of air defense command be kept aware of these developments and their effect on the air defense posture.

Distribution of this publication will be made only within the School, except for distribution on a gratuitous basis to Army National Guard and USAR schools, Reserve component training and ROTC facilities, and as requested by other service schools, CONUS armies, US Army Air Defense Command, Active Army units, major oversea commands, and military assistance advisory groups and missions.

Qualified individuals may purchase copies of Air Defense Trends at 50 cents a copy from the Book Store, US Army Air Defense School, Fort Bliss, Texas 79916. The form below is printed for convenience in ordering.

When appropriate, names and organizations of authors are furnished to enable readers to contact authors directly when they have questions concerning an article.

Unless copyrighted or syndicated, material may be reprinted provided credit is given to Air Defense Trends and to the author.

Articles appearing in this publication do not necessarily reflect the opinions of the US Army Air Defense School or the Department of the Army.

INDIVIDUAL COPIES

☐ Please forward _____ copies of the _____ 1972 issue of Air Defense Trends. Enclosed is 50 cents for each copy ordered.

SUBSCRIPTIONS

☐ Please enter my subscription for the next (1) (2) (3) issue(s) of Air Defense Trends at 50 cents per issue.

Name _____

Street Address _____

City _____ State _____ ZIP Code _____

Make checks payable to the Book Store, US Army Air Defense School.

US ARMY AIR DEFENSE SCHOOL

Commandant . . . . . Major General R. L. Shoemaker

Assistant Commandant . . . . . Brigadier General L. L. Leech, Jr

Deputy Assistant Commandant . . . . . Colonel D. W. Pettigrew, Jr

Secretary . . . . . Colonel G. Heimer

Office of Doctrine Development, Literature, and Plans . . . . . Colonel N. R. Haley

The School Brigade . . . . . Colonel W. J. Monyhan

Director of Instruction . . . . . Colonel J. L. Hayden

Command and Staff Department . . . . . Colonel L. D. Overstreet

High Altitude Missile Department . . . . . Colonel A. M. Kolesar

Low Altitude Air Defense Department . . . . . Colonel R. D. Powell

Missile Electronics and Control Systems Department . . . . . Colonel H. S. Pitzer, Jr

Nonresident Instruction Department . . . . . Lieutenant Colonel W. O. Gray, Jr

Safeguard Central Training Facility . . . . . Colonel B. Spalding

US ARMY AIR DEFENSE CENTER AND FORT BLISS

Commanding General . . . . . Major General R. L. Shoemaker

Deputy Commander . . . . . Colonel R. A. Mazzucchi

Chief of Staff . . . . . Colonel L. G. Churchill

1ST ADVANCED INDIVIDUAL TRAINING BRIGADE (AIR DEFENSE)

Commanding Officer . . . . . Colonel D. E. Mulligan

11TH AIR DEFENSE ARTILLERY GROUP

Commanding Officer . . . . . Colonel L. B. Bjostad, Jr

HEADQUARTERS COMMAND

Commanding Officer . . . . . Lieutenant Colonel F. M. Bashore

RANGE COMMAND

Commanding Officer . . . . . Colonel E. A. Ericsson

US ARMY AIR DEFENSE BOARD

President . . . . . Colonel W. H. Holcombe, Jr

US ARMY COMBAT DEVELOPMENTS COMMAND AIR DEFENSE AGENCY

Commanding Officer . . . . . Colonel R. C. Barlow

US ARMY AIR DEFENSE HUMAN RESEARCH UNIT, HUMAN RESOURCES RESEARCH ORGANIZATION

Chief . . . . . Lieutenant Colonel F. R. Husted

AIR DEFENSE TRENDS EDITORIAL STAFF

Colonel N. R. Haley . . . . . Staff Director

Lieutenant Colonel J. T. Hicks . . . . . Chief

W. E. Sanford . . . . . Editor

Master Sergeant J. H. Marshall . . . . . Circulation

Private G. J. Starkweather . . . . . Illustrator

Terry Carrasco and Genevieve McPherson . . . . . Secretaries

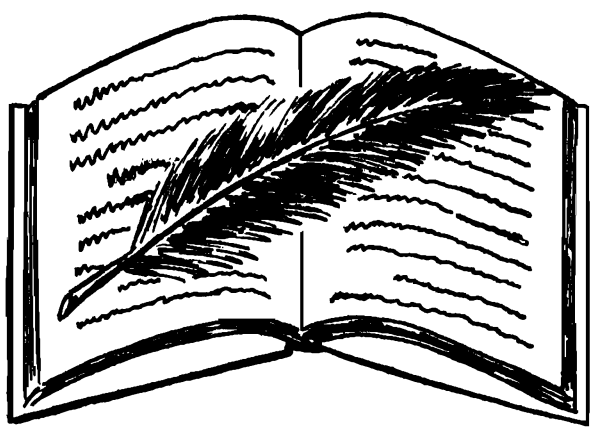

Air Defense Trends seeks your comments on any material published. A different viewpoint or a new line of reasoning may be published to stimulate the exchange of ideas. If you are an authority on a subject, we invite you to write an article and inform our other readers. If circumstances prevent you from writing an article, send in your idea and our editorial staff will assist in developing an acceptable article.

EDITORIAL

Learned men will agree that socially acceptable success must have a basis in knowledge. Enlightened philosophers such as Montesquieu, Voltaire, and Rousseau proclaimed this fact more than two centuries ago. This assertion proves sound whether we examine success in simple undertakings or in more complex endeavors. For illustration, let us consider this abbreviated story.

On a cold wintry day a number of years ago, a son was born to Thomas and Nancy. Let's call him Al.

At about the age of 6, Al became engaged in the relatively simple task of learning to read and write. It was a rather "stumbling" experience for him; but despite certain handicaps, he managed, through perserverance, to muddle through, and the success he experienced opened portals to knowledge that would otherwise have been denied him.

During his formative years, acquiring new knowledge was a great struggle for Al. He was a slow learner, and circumstances prevented his parents from providing many of the things that might have made his task easier. Nevertheless, he was successful in developing his education, for he had an unshakable determination to acquire knowledge in preparation for opportunities that he felt certain would come. He was wise enough to realize that knowledge is the stuff of which success is made. And his attitude was, "I will study and prepare myself, and some day my chance will come."

One day, Al (now a young man) decided to build a large boat. This was a logical notion because he lived near a navigable river. And he did build a boat—a very good one. But first he obtained knowledge in the art from others who had experience. Having been successful at building a seaworthy boat, Al soon acquired knowledge that enabled him to navigate the river, and this in turn led to the development of a successful transportation business.

Al's increasing knowledge, resulting from continuous study, caused him to be drawn into arguments about national and world affairs. He soon found himself speaking publicly about these affairs.

About this time, Al set for himself the goal of securing a highly respected, professional position in the community. After some 3 years of diligent study, he attained his goal at the age of 26.

Success in this venture fired Al to seek an even higher attainment. Undaunted by the toils of the road, he moved up to a position in the legislature of his state.

Following this achievement, Al was subjected to the pangs of defeat when he lost to his opponent in a race for the United States Senate. But he was triumphant even in defeat because the public popularity he acquired during the race transcended the magnitude of the office he had sought.

The encouragement born of repeated success, together with the urgings of an enthralled public following, caused Al to seek a still higher accomplishment.

Today, with the Reflecting Pool on one side and the Potomac River on the other, there stands in Washington, D.C., a magnificent monument proclaiming the knowledge and wisdom of this great man—a man whose successes spanned the "spectrum" of human accomplishments, ranging from the simplest to those of greatest consequence.

We have no way of knowing today whether there are any Abraham Lincolns among us, but we do know that there is a similar determination to succeed among us. We must, then, with energy and perserverance, embark upon the component endeavors that will build the foundation of knowledge necessary to insure success.

—W. E. S.

LETTERS

to the Editor

•I enjoy reading Air Defense Trends every time it is published. I consider the June 1971 issue to be most informative and well organized. I must take issue, however, with a few statements made in the article, "The Negro Soldier, Yesterday and Today," on pages 56 through 65, as well as point out what was not said. The article, having apparently been written by an air defense artillery officer, surprisingly makes no mention of the all-Negro air defense units during and after World War II.

Having served as a White officer with the 99th Coast Artillery (AA) Regiment (an all-Negro, White officer unit) at Camp Davis, North Carolina, in August 1941, I take exception to the statements on page 59, reference the officer strength in Negro units "being 50 percent greater," and the paragraph "During 1942 . . . by dividing them among infantry, engineer, and quartermaster units." Our officer strength in the 99th was standard TOE strength—the same as any White unit. We had some darn fine all-Negro AA units already organized and operational in 1941. Besides the 99th at Camp Davis, I seem to recall the 96th, 97th, and 98th being there and also being all-Negro. I also recall a 54th Coast Artillery Regiment (155-mm gun) being there and Negro also. Also, I think we had an all-Negro barrage balloon outfit, but I don't recall its designation.

To reminisce, I clearly remember the 99th Regimental Band swinging through the regimental area to the tune of "When the Saints Go Marching In" instead of the usual military marching music. Even at the retreat parades, marching was done to popular swing tunes and the troops really marched. As for gun drill with the 90-mm's and 37-mm's, the crews were tops. And as for motor marches, those drivers could really wheel the "deuce-and-a-half's" and artillery tractors. The 99th was sent to the Caribbean, Trinidad, or Antigua as I recall, but I don't know where the other units went.

Later, I recall running into the 450th AAA Automatic Weapons Battalion (40-mm, towed) at Eileson AFB, Fairbanks, Alaska, in 1951-54, another all-Negro antiaircraft (AA) unit. They referred to themselves as the "Foe-Five-an a Rolling Oh" and didn't like it too well when the White outfits, the 93d and the 502d (both 120-mm outfits), referred to them as the "Four-Nickle-Nuttin." But, as with other things, at 50° to 70° below zero, the color of a guy's

skin doesn't seem to matter when there's a job to be done, such as defending an airbase from attack across the North Pole. As for the "banana belt" down around Anchorage, the 30th AAA (40-mm, towed) Automatic Weapons Battalion, another all-Negro AA unit, was doing its job there.

So, I'm surprised that Major Revels didn't give the Negro AA units their fair share of the history of the Negro in the US Army. I certainly think they earned it. I'm sure that there were other all-Negro AA units during World War II that research would have revealed, but I would have been satisfied with even a generalized mention of the Negro AA units, especially in an article such as this, appearing in an air defense publication.

OLIVER A. KUSSEROW
AD Arty - LTC (Ret)
USACDCADA
Fort Bliss, Texas

•Reference Major James W. Revels' article, "The Negro Soldier, Yesterday and Today," which appeared in the June 1971 issue: The article leaves the impression that no Negro soldiers were awarded the Medal of Honor for early wars. Fairfax Downey, The Buffalo Soldiers in the Indian Wars, McGraw-Hill, 1969, lists 10 soldiers of the 9th and 10th Cavalry and 24th Infantry who received the Medal of Honor. More than half were won in New Mexico and Arizona between 1879 and 1890.

MILTON C. GRINSTEAD
MAJ, Sig
Chief, Television Division
US Army Air Defense Center and Fort Bliss
Fort Bliss, Texas

The response to our 1971 canvass of subscribers was abundant, informative, and rewarding. Here are some typical comments.

—Ed.

•I feel that Air Defense Trends is an outstanding magazine for young Air Defense Artillery officers and career Air Defense Artillery officers.

4th Battalion, 43d Artillery
APO Seattle 98789

•We in the Air Defense Directorate use Trends for reference as well as general interest. We appreciate your effort.

Air Defense Directorate
ACofS for Force Development
Washington, D.C. 20310

• This publication has materially assisted this headquarters in keeping abreast of the latest trends and developments in air defense. Several articles have been used as instructional material and as part of briefings for VIP's.

164th Artillery Group (AD)
Miami, Florida 33127

• We find this a very good research document with respect to characteristics and capabilities of air defense weaponry.

Headquarters NORAD (NPPL)
Ent AFB
Colorado Springs, Colorado 80912

• Historical section and current Soviet weapon systems development and deployment very good.

69th Artillery Group
APO New York 09801

• As a NATO organization, we find the information available in Trends very beneficial to members of other services and nations assigned here.

Allied Sector Three (4ATAF)
APO New York 09012

• Air Defense Trends greatly aids infantry units to increase their general knowledge and interest in air defense operations. The publication has been of use in enlisting support for section operations and serves as an interesting way of communicating developments in air defense to those who are removed from the mainstream of information.

AD Section (Redeye)
1st Battalion, 38th Infantry
2d Infantry Division
APO San Francisco 96224

• Very informative to officers and men interested air defense operations.

336th Ordnance Battalion
Little Rock, Arkansas 72202

• I think the magazine is wonderful; I really like those far-out, mind-enlarging articles by CDC.

Advisory Team 15
Duy Xuyen District
APO San Francisco 96349

• An excellent publication—only comment would be that we'd like to see it come out more often—a lot of excellent material.

US Army Instructor Group (SR ROTC)
Oregon State University
Corvallis, Oregon 97331

• The copy we receive is placed in the reading file—mandatory reading—so everyone on the Board sees it.

US Army Maintenance Board
Fort Knox, Kentucky 40121

• An ideal tool which is used to keep our USAR units updated on air defense artillery.

USA Adv Group (USAR)
Kansas City, Kansas 66112

• We rely heavily on Air Defense Trends to keep us up to date on air defense artillery matters both for our own prefessional benefit and the Iranian Armed Forces we advise. Keep up the good work.

Chief
ARMISH-MAAG
APO New York 09205

• Air Defense Trends is a great help in keeping up to date on air defense matters at the college. It is read by all artillery students.

Canadian Land Forces Command
& Staff College
Fort Frontenac
Kingston, Ontario

• The University of Texas is branch oriented and has an Air Defense Artillery branch. Copies of Air Defense Trends are given to each cadet (future air defense artillery officer) enrolled in the air defense program.

USAIG (ROTC)
University of Texas
Austin, Texas 78712

• Air Defense Trends is always useful to our research members. We hope to read more operational and training matters in the publications. We await the next issues. Thank you.

Research Department AAA School
Ground Self-Defense Forces - Japan
Chiba-ken, Japan 280

• More pictures and more characteristics of the equipments needed.

French Liaison Officer
Fort Bliss, Texas

• Wish to hear some statistical records of actual effectiveness of worldwide surface-to-air weapon systems. By that, we mean the actual knockdowns of aerial targets by various air defense missile systems developed by different countries and being used in those troubled areas such as the Mideast, Vietnam, etc., in recent years. Statistic records of ASP's of various weapon systems by different countries would also be interesting.

Chinese Liaison Officer
Fort Bliss, Texas

USAADS Notes

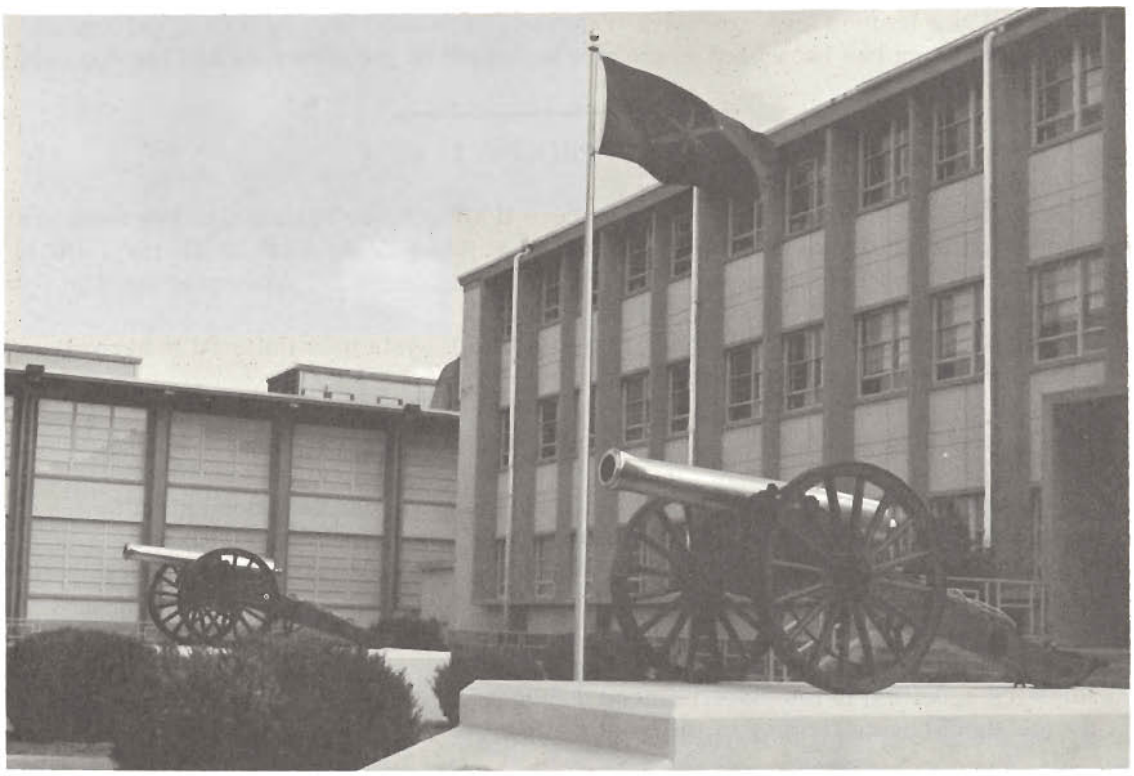

Hinman Hall

OFFICE OF DOCTRINE DEVELOPMENT, LITERATURE, AND PLANS

MISSILE SITE RADAR IMPROVED

A design improvement expected to save approximately $2.5 million in the missile site radar (MSR) program has resulted in a special citation for two Raytheon Company engineers.

The engineers, Robert T. Williamson and Christo J. Georgopoulos, received commendations recently from the Defense Contracting and Supply Agency, Boston, Massachusetts, for their cost reduction improvement which is being used on two MSR's currently under construction by the company.

The MSR, a large phased-array radar, is a part of the Safeguard ballistic missile defense system.

The design improvement involved a new technique called switching alinement, which, when used with power-type transistors, improved switching times of the elements used in the phased-array radar by a factor of two.

Switching time specifications in the MSR using prior circuitry required expensive power transistors costing about $17 each.

With the new method less expensive transistors are used with no loss in performance. A patent application has been filed on the new technique by the inventors and the company.

REDEYE IN-PROCESS REVIEW

The system development plan for the Redeye II air defense system was reviewed and approved at an in-process review (IPR) conducted at Redstone Arsenal, Alabama, late in August 1971. The voting members of the IPR recommended to Department of the Army that:

- Priority 1 engineering development of the Redeye II system be initiated in accordance with the system development plan.
- The system development plan be modified as necessary throughout the development.
- Development be initiated for a night vision device which can be fielded simultaneously with the weapon and which will provide maximum capability within the development time frame of Redeye II. However, nonavailability of this device should not delay fielding of the basic weapon.
- Development be initiated for an identification, friend or foe, device with the characteristics specified in the materiel need document. However, nonavailability of this device should delay fielding of the basic weapon.
- To effectively meet the development urgency, an Army project office with active Marine Corps representation be immediately established.

Redeye II system is proposed as the replacement for the currently deployed basic Redeye air defense weapon.

TRICAP DIVISION TESTS NEW COMBAT CONCEPTS

A new division has been formed which has a triple capability—armor, airmobile infantry, and air cavalry. It is an experimental division which will be maintained at a high state of readiness so that the division can meet NATO or other worldwide commitments. The division has been named the 1st Cavalry Division (Tricap)—for triple capability—and is located at Fort Hood, Texas.

The Tricap division is using the assets of the 1st Armored Division (Airmobile) but still flying the colors of the 1st Cavalry Division. The colors of the 1st Armored Division were transferred to the 4th Armored Division (now located in Europe), whose colors were then inactivated.

The test division consists of an armored brigade, airmobile infantry brigade, air cavalry combat brigade, and necessary combat support and combat service support units.

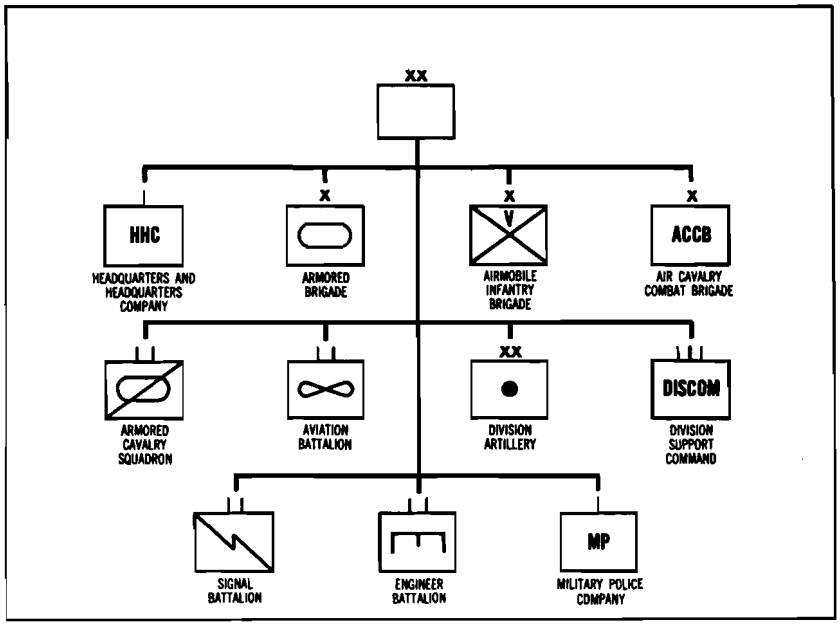

Organized as a balanced, quick-reacting force, the experimental division will be tested under supervision of Project MASSTER (Mobile Army Sensor Systems, Test, Evaluation, and Review).

The division will test the combination of the three brigades, develop concepts and tactics for their employment, and use new materiel now in the testing stage of development.

The division is authorized approximately 330 aircraft and has a strength of about 13,000. Reorganization of the first units began in the spring of 1971. Training began in April 1971 with testing starting in August 1971 and scheduled to continue into 1974.

Organizational changes and improvements will be made over the next 2 or 3 years based on experience gained during the tests. The organization of the armored brigade, airmobile brigade, and support units is similar to those found in other active divisions.

The air cavalry combat brigade, however, is a new organization which eventually will consist of an aerially mounted, combined arms team of attack helicopters, air cavalry, airmobile infantry, signal, engineers, and selected combat service support units when organized for independent operations.

Testing of the division is under the direction of Project MASSTER (Mobile Army Sensor Systems Test, Evaluation, and Review), a special project begun in 1969 to test doctrine, concepts, and materiel that might be used on future battlefields.

COMMAND AND STAFF DEPARTMENT

DR. RICHARD L. HALEY ADDRESSES 1181 GRADUATES

Doctor Richard L. Haley presents diploma to Captain Robert Dopher, USMC, honor graduate.

Dr. Richard L. Haley, Scientific Advisor to the Director of Missiles and Space, Office of Research and Development, Department of the Army, recently addressed the graduating class of the Guided Missile Systems Officer Course at the US Army Air Defense School, Fort Bliss, Texas.

The former manager of NASA's Nimbus weather satellite program told the class of officers that their newly acquired knowledges and skills in missile science are in demand in most of the top jobs in the Army's research and development. He added that the Army needs the professionalism of the graduates.

Dr. Haley, a graduate of the Guided Missile Systems Officer Course during the early years of Army missile development, pointed out the great strides made in the space and missile field and briefly discussed trends in Army research and development in this area.

Brigadier General Lloyd L. Leech, Jr, Assistant Commandant of the Air Defense School, and other prominent School officials attended the graduation. Also on hand were the families and friends of the graduating class members.

After his talk, Dr. Haley presented the Association of the United States Army plaque to Captain Robert J. Molepske, distinguished graduate of the 33-week course.

FIELD TRAINING EXERCISE

The field training exercise for the Officer Basic Course (2-44-C20) has undergone its first major revision in several years. This revision was brought about with the introduction of a new program of instruction incorporating the "school of the soldier" concept.

The field training will allow the student to put into practice much of the material presented in the classroom. The exercise will last 3 days and 2 nights during which emphasis will be placed on leadership situations that will cause the student to react. It is intended that the field training exercise will improve the capabilities of the junior officer to handle problems with which he will be confronted during troop duty, and improve his proficiency in

basic military skills. Some of the subjects to be included during the field training exercise are map reading; field sanitation; escape and evasion; nuclear, biological, and chemical warfare; and perimeter defense.

NONRESIDENT INSTRUCTION DEPARTMENT

REDEYE CORRESPONDENCE COURSES

Redeye, the all-arms weapon, is now an organic weapon in all divisions of the Active Army.

WHAT DO YOU KNOW ABOUT REDEYE?

Do you know its characteristics, capabilities, and employment techniques? The Nonresident Instruction Department, US Army Air Defense School, offers four correspondence subcourses on the Redeye weapon system.

Subcourse 560, Redeye Employment

This one-lesson subcourse provides instruction on the tactics and techniques of the employment of Redeye.

Subcourse 568, Introduction to Redeye

This one-lesson subcourse provides basic instruction in Redeye system characteristics, capabilities, operation, and major components; target engagement procedures and firing techniques; organization and mission of the air defense section (Redeye); organization, mission, and emplacement of the Redeye team; command and control; communications; and rules for engagement. These two subcourses provide general instruction on Redeye and the tactics and techniques of employment. For the Redeye gunner and missile system controller (air defense section leader), more detailed instruction is provided in the following subcourses:

Subcourse 570, Redeye Gunner

5 lessons and examination — 12 credit hours

Subcourse 572, Redeye Missile System Controller

5 lessons and examination — 15 credit hours

Learn more about Redeye. Enroll in one of the foregoing subcourses by completing an enrollment application (DA Form 145) and submitting it through your unit commander to:

Commandant
US Army Air Defense School
ATTN: DNRI - Box 5330
Fort Bliss, Texas 79916

Notes From
US Army Air Defense Center and Fort Bliss

DEPARTMENT OF DEFENSE TO REORGANIZE GLOBAL UNIFIED COMMAND STRUCTURE IN 1972

A worldwide reorganization of the unified command structure of United States military forces has been announced by [former] Deputy Secretary of Defense David Packard. The reorganization follows Secretary of Defense Melvin R. Laird's March 1971 Defense Report to Congress providing for modifications to the present structure and bringing responsibilities more in line with requirements imposed by national policies and commitments.

The changes, effective 1 January 1972, will realine and adjust the missions and responsibilities of five of the seven unified commands. The major changes will be:

Strike Command—Middle East, Southern Asia, and Africa South of the Sahara (MEAFSA)—will be disestablished. In its place at MacDill Air Force Base, Florida, the US Readiness Command will be established. The new organization will be an austere headquarters to control US-based major combatant general-purpose forces not assigned to other unified commands. Its general responsibilities will be to provide a reserve of combat-ready forces to reinforce other unified commands and assist the Joint Chiefs of Staff in joint-training requirements and doctrine.

Alaskan Command at Elmendorf Air Force Base, Alaska, will retain responsibility for US forces on the continental landmass of the State of Alaska as well as certain coastal islands—less the Aleutian Islands and the islands in the Bering Sea.

Atlantic Command at Norfolk, Virginia, has the responsibility for those US military forces and elements in the Atlantic Ocean, the Caribbean Sea, and the waters around Central and South America and Africa.

European Command, with headquarters at Stuttgart, Germany, has the responsibility for those US military forces and elements in Western Europe, including the United Kingdom, Mediterranean Sea area, and Middle East landmass to the eastern border of Iran, the Red Sea, and Persian Gulf.

Pacific Command, at Camp Smith, Hawaii, has the responsibility for those US military forces and elements in the Pacific Ocean, Bering Sea, Indian Ocean, Japan, Korea, the countries of Southeast and Southern Asia, and all islands in assigned water areas.

The responsibilities of the US Southern Command, Continental Air Defense Command, and the Strategic Air Command (a specified command) are not changed.

—Washington (AFPS)

IMPROVED RADAR

The co-designer of the missile site radar for the Safeguard system, David K. Barton, has recently collaborated in the invention of an improved angle discrimination radar receiving system. Mr. Barton is a consulting scientist at the Raytheon Company involved in developing military electronic equipment, and in this connection has authored two books and more than 30 papers on radar and atmospheric propagation that have military application.

RESEARCH AND DEVELOPMENT'S SEVEN NEW INITIATIVES

Lieutenant General William C. Gribble, Jr, Chief of Research and Development, Department of the Army, has described the Army's new initiatives program designed to exploit new ideas and to expedite on-going projects:

IMPROVEMENTS FOR THE INDIVIDUAL SOLDIER

The plan for a smaller, modern Army in the near future requires that we achieve new efficiencies and effectiveness in the management and productivity of our fundamental resource—the individual soldier.

We are increasing our research and development effort in several areas dedicated to improving the lot of the individual soldier—his safety, prestige, effectiveness, comfort, and survivability. For example, efforts have been accelerated to provide the soldier with better protective equipment, such as body armor and a new type of helmet. Battlefield safety and combat effectiveness will be improved by the development of improved equipment for detection and neutralization of mines and boobytraps. Our focus is on all aspects of the military life of the soldier in garrison as well as in the field. Our new efforts include improved food and supply service systems and extend to improvements in nonmateriel matters, such as improved manpower management practices, incentives, and rewards that increase the attractiveness of military service to capable men. Further, our expanded research and development program for the individual soldier is characterized by the systematic integration of the numerous separate but interacting topics that impact on the soldier. By this I mean the Army is viewing recruiting, training, career management, facilities, and family services in their totality as the professional soldier does. To do this, we propose to create a small, high-caliber, new institute that will examine these topics, as viewed by the individual soldier, and their impact on him.

FORWARD AREA AIR DEFENSE SYSTEMS

There is an urgent requirement for improvements to existing forward area air defense systems to complement SAM-D. When designed, our current weapons were equal to the threat of the times and were the best that technology could then give us. Now the threat has increased; but so has technology, which can now give the required new capability. Evaluations are now underway to determine the possibility of improving Chaparral and Vulcan.

DYNAMIC DEFENSE

"Dynamic defense" is our next new initiative. Since we now hold the ground over which we may have to fight, we are in a position of being able to prepare that ground prior to the advent of hostilities. A technological base to accomplish this program has already been established. Our FY 72 efforts will primarily be concept formulation, utilizing this base.

AIRCRAFT ELECTRONIC WARFARE (EW) PROTECTION EQUIPMENT

The fourth new initiative consists of efforts to increase the ability of our aircraft to successfully operate against modern air defense weapons.

TERMINAL HOMING

Terminal homing gives the Army capability it has never had before. We have always talked about our desire to have a first-round hit capability; with terminal homing, we now have a means of achieving it.

Until now the most practical way to defeat moving, hard-point targets, such as tanks and armored personnel carriers, has been with line-of-sight, surface-launched, short-range weapons. Faced with the large armored threat in Western Europe, it would be preferable to employ indirect fire, surface launch, with the attendant advantage of reduced vulnerability and longer range, and to use attack helicopters armed with "fire and forget" missiles to reduce the aircraft exposure time to a minimum. Terminal homing provides a means to do both. Terminal guidance offers the chance to deliver nonnuclear munitions to great ranges with extreme accuracy (and also to deliver nuclear warheads directly on their intended targets).

INTEGRATED BATTLEFIELD CONTROL SYSTEM (IBCS)

In recent years, the Army has made significant improvements in its capabilities for firepower, mobility, information gathering, communications, and combat service support. However, the ability to integrate and control these functions of land combat has not kept pace. The task of integrating and controlling the above functions is called "command and control."

Our tactical operations centers which aid commanders in performing their command and control are now essentially manual. Modern technology—particularly in the area of automatic data processing—can provide a much-improved capability to integrate and control the functions of land combat. The Army has been in the process of defining the integrated battlefield control system, or IBCS. IBCS is defined as the structured framework of personnel, organizations, concepts, doctrine, and equipment integrating the functions of combat into a coherent operation.

The purpose of an IBCS is to facilitate decision-making for the effective use of combat power.

AERIAL SCOUT

Currently, the Army's tactical airmobile capability is degraded because the aerial scout, the light observation helicopter (LOH), is limited in its performance of several elements of the scouting mission.

The scout is limited in its ability to navigate tactically at low level. Target acquisition is now limited essentially to those targets acquired by the unaided vision of the crew members. The aerial scout is generally unable to rapidly and accurately locate his own position and, more importantly, to hand off to a gunship the location of a target. The scout currently designates targets through the use of smoke or by passing estimated coordinates, a system with obvious limitations. The scout's mission performance is severely lessened by conditions of reduced visibility, and there is concern about the scout's survivability in a mid-intensity conflict.

In this seventh and last new initiative, we are focusing on the incompatibility of the scout and the gunship by concentrating on improving the scout. This new initiative improves the LOH mission performance as a day/low-visibility/night scout.

—Statement before the Department of Defense Subcommittee, Committee on Appropriations, U.S. Senate, First Session, 92d Congress.

—Command Comment No. 78

SOI AND SSI OBSOLETE TERMS

The term, signal operation instructions (SOI), has been changed to communications-electronics operation instructions (CEOI) and the term, standing signal instructions (SSI), has been changed to communications-electronics standing instructions (CESI). The newly adopted terms and abbreviations appear in AR 310 50, Authorized Abbreviations and Brevity Codes.

AN/TSQ-73 NAMED MISSILE MINDER

The Army's latest command, control, and coordination system AN/TSQ-73, now under development with Litton Industries as the prime contractor, has been named Missile Minder. The AN/TSQ-73, which includes both brigade/group and battalion level systems, will replace the AN/MSG-4 (Missile Monitor) system currently deployed overseas.

AVENUES OF APPROACH

The term, route of approach, as formerly used in discussion of Hawk defenses, has been changed to avenue of approach and is so used in FM 44-1 and FM 44-96. Hawk deployment, designed to counter the probable enemy low-altitude threat, is based largely on terrain factors which led to the adoption of this term. In discussing Nike Hercules defense planning,

the term, direction of attack, is used. When used as modifiers, both terms are hyphenated; for example, avenue-of-approach B; direction-of-attack line.

AIRSPACE COORDINATION ELEMENT

The airspace control element in tactical operations centers (FATOC, CTOC, and DTOC) has been renamed airspace coordination element (ACE). This change, adopted by US Army Combat Developments Command Institute of Combined Arms and Support, will appear in the next revision of FM 101-5, Staff Officers' Field Manual—Staff Organization and Procedure.

REVISION OF FM 44-96

FM 44-96, Air Defense Artillery Employment, Hawk, March 1971, has been distributed recently. Major revisions to the text include updating Hawk organizations, command and control, communications, employment concepts, RSOP, active and passive defense of Hawk units, and USSTRICOM ADA battalion organization. Incidentally, this is the first field manual to use illustrations on the cover.

REDEYE NOMENCLATURE

The Redeye tracking head trainer, Redeye training set, and moving target simulator have been type classified standard A, resulting in the "X" being dropped from their model numbers. The new usage will be Redeye tracking head trainer M49E3, Redeye training set M76, and moving target simulator M87. The Redeye system in the field, formerly XM41E2, is now designated M41.

ARADCOM REORGANIZATION

ARADCOM now has two regions (1st and 6th) and a separate brigade (31st Artillery Brigade (Air Defense)) with a total of 52 Nike Hercules fire units and 16 Hawk fire units in the remaining 11 defenses. The 2d ARADCOM Region was inactivated and the area of responsibility for 1st ARADCOM Region has been expanded to include the units formerly in 2d Region. The 40th Artillery Brigade (Air Defense), stationed at Presidio of San Francisco, is redesignated 13th Artillery Group (Air Defense). The expanded 1st ARADCOM Region includes three brigades and three groups; the 6th ARADCOM Region includes three groups.

IMPROVED HAWK MISSILES

At White Sands Missile Range, New Mexico, the US Army is taking a close look at the performance of its Improved Hawk missiles. In a series of reliability demonstration tests recently completed, 17 rounds of the advanced air defense missile were fired and 16 successes were scored against Firebee drones. Missiles destroyed targets flying at both low and high altitudes and at near minimum and maximum ranges. Used in the tests were the first Improved Hawk production missiles delivered to the Army by Raytheon Company under

the certified missile round concept. That concept provides greater reliability because missiles go directly from the production line to the launchers—no maintenance or test equipment is required.

Improved Hawk, which was introduced in 1964, features a new guidance section, larger warhead, and improved motor propellant. The US Army Test and Evaluation Command (USATECOM) is conducting the tests with Improved Hawk missiles with support from USAMICOM. Hawk is in operation with Army and Marine Corps units overseas and is poised on launchers in the United States.

Notes From the US Army Combat Developments Command

DOCTRINE

The US Army Combat Developments Command Air Defense Agency has been deeply involved in the controversial subject of "airspace coordination." The increased activity in this area began with a 6 November 1970 Air Defense Center Team position paper which recommended: " . . . that Department of the Army assign the Army air traffic coordination mission (less terminal control) to the Air Defense Artillery . . . ." The Agency has subsequently taken two major actions:

- Preparation of a coordination draft of an "Army Airspace Coordination Handbook" that was submitted for worldwide review and eventual publication as a Department of the Army field manual, FM 44-10 (Test). The Handbook provides step-by-step procedural guidance for all persons and facilities having some involvement in airspace coordination in the combat zone. To date, field acceptance has been excellent.

- Development of a graduated set of proposed concepts for using near-future air defense artillery (ADA) materiel to serve in both the air defense and the airspace coordination roles. The concepts are presently undergoing selective field review. The proposed concepts range from adding an air traffic controller at selected FAAR's (forward area alerting radars) to extend the current Army traffic regulation capability, to totally combining the ADA and Army air traffic regulation systems into one by exploiting ADA radar coverage at all levels and employing a modified AN/TSQ-73 air defense control and coordination system to perform both system functions.

STUDIES

The Agency recently began work on a major study effort entitled "Field Army Air Defense Systems (FAADS)." The purpose of the FAADS study is twofold:

- Determine the minimum short-range air defense (SHORAD) capabilities required to complement SAM-D and develop a recommended program for improving the current

SHORAD capability to meet the future requirements. Use of cost-effectiveness techniques of analysis will be emphasized.

- Determine the doctrinal, organizational, deployment, and employment concepts required to maximize the effectiveness of the air defense weapons and control systems during the study time frame.

The study "Concepts and Doctrine for Air Defense of the Division Area (DIVAD)," previously reported in Air Defense Trends, has been approved by US Army Combat Developments Command, and wide distribution of the January 1971 final draft of this study has been accomplished. The study is recommended for its in-depth coverage of division air defense command and control, warning, and airspace coordination.

Notes From the Human Resources Research Organization

The Army's principal training research and development agency, the Human Resources Research Organization (HumRRO), celebrated its 20th anniversary in August 1971.

Originally organized as the Human Resources Research Office by George Washington University, this nonprofit corporation has sought to improve human performance in organizational settings through behavioral and social science research, development, consultation, and instruction.

HumRRO has been at Fort Bliss since June of 1954 when, with a staff of three, it established a job sample proficiency test for M33 radar mechanics. Now known as HumRRO Division No. 5, it has a staff of 17 including its Director, Dr. Albert L. Kubala.

HumRRO Division No. 5's best known efforts at Fort Bliss are its work unit HAWKEYE in which it developed a new program of instruction for Hawk continuous-wave radar mechanics. The Low Altitude Air Defense Department of the US Army Air Defense School currently uses data from HAWKEYE research in several of its courses. Benefits from the HAWKEYE research include reduced student attrition, reduction of schooling, increased proficiency of graduates, and a cost savings of some $4,000 per student.

Other work of a general nature being conducted by HumRRO Division No. 5 includes research in detection and recognition of air targets, developing of prototype individualized instructional materials to allow air defense artillery students to learn at their own pace, and the development of a procedure and related materials for training and evaluating Army instructors, thus improving their classroom effectiveness. HumRRO at Fort Bliss also performs technical advisory services for units on post.

Specific work units planned for FY 72 include those listed in the September 1971 issue of Air Defense Trends and Exploratory Research 90 (ER-90). This project has the objective of determining the feasibility of developing a method of identifying the characteristics of training equipment families that produce maximum transfer of skills for US Army Security Agency operators.

HumRRO Division No. 5 has provided two consulting reports to the US Army Safeguard System Evaluation Agency, White Sands Missile Range. The reports are entitled "Human Engineering Evaluation of the Safeguard L-Shaped Console" and "Manual Action Performance Requirements for Safeguard System Command and Control Positions."

Testing has been conducted to obtain preliminary data concerning the effectiveness of several types of optical aids for visual detection. Testing included the use of US Government issue 7x50 binoculars, a 2-1/2 to 8x35 zoom scope made in Japan, a 7x50 binocular modified to reduce the amount of luminance transmitted to the eye, a 7x35 wide-angle binocular, and a 1.5 to 12 power Zoom Sighting System manufactured by the DynaScience Corporation. This optic, obtained on loan from Project MASSTER, consisted of the basic optical unit of the XM 76 Anti-oscillation Sighting System.

These preliminary tests were concerned with evaluating the relative effectiveness of five optical aids for target detection. The results suggest that the medium-power (7x) binoculars are more effective than low-power aids under illumination levels that approximate dark to overcast sky conditions.

William Beaumont General Hospital (Fifty Years of Service)

Brigadier General Robert M. Hardaway III, M.D.
Commanding General
William Beaumont General Hospital

Brigadier General Hardaway.

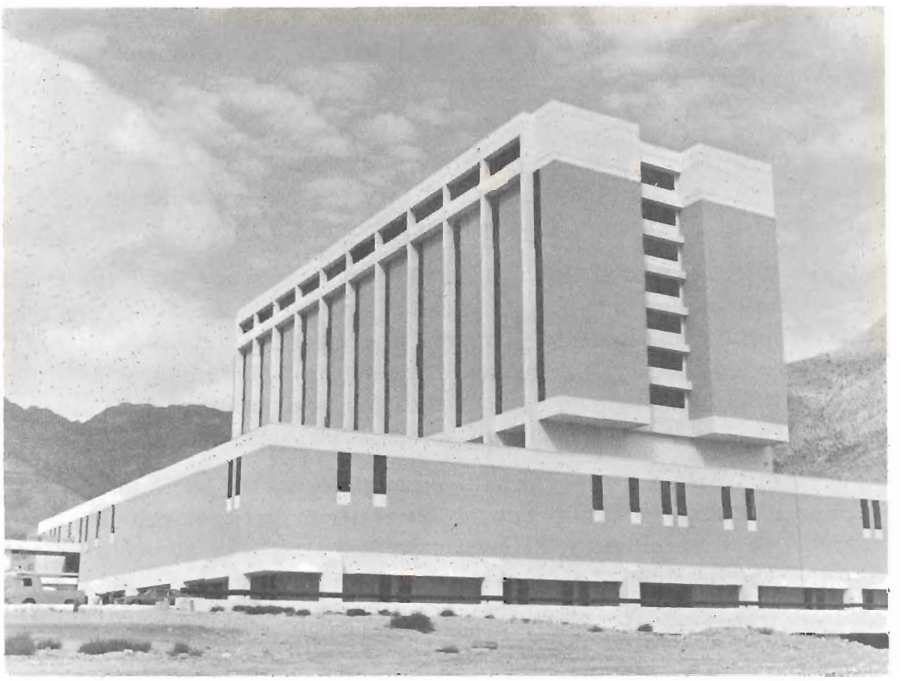

The new William Beaumont General Hospital.
By the summer of 1972 this ultramodern facility will be fully operational.

Editor's Note:

Practically every air defense artilleryman, or some member of his family, has received or will receive medical treatment at William Beaumont General Hospital. Being thus involved, certainly all air defense artillerymen will be interested in this report by General Hardaway.

A half century ago (1 July 1921) William Beaumont General Hospital (WBGH) opened its doors to patients for the first time. It was named after a Regular Army medical officer who in the early days of the 19th century, while stationed at a remote frontier Army post, performed the world's first scientific studies of enzymes and became the first world-renowned American physician.

The hospital was isolated in the Franklin Mountain foothills, surrounded on all sides by desert, and several miles north of the city of El Paso—then with a population of 77,000.

Fifty years later, while the external aspects of the hospital buildings would look familiar to those present in 1921, almost everything else has changed beyond recognition. Instead of being isolated, the hospital is now surrounded by a metropolitan area approaching a million people. Instead of two medical officers, we now have 178; instead of six nurses, we now have 169; instead of 30 enlisted men, we now have 733 enlisted men and women, in addition to more than 800 civilian employees.

Instead of mustard plasters, castor oil, and amputation saws, we now diagnose and treat patients by organ scanners and nuclear medicine. More than 80 percent of the medicines we use today was not available even 30 years ago.

We save the lives of heart attack victims by cardiac monitors and cardiac massage. We save limbs by repairing or replacing arteries. We study illnesses in the Army's only automated computerized medical laboratory. We save patients suffering kidney failure with artificial kidneys. We recently succeeded in repairing a ruptured heart due to a heart attack, the first time in medical history that this feat has been accomplished.

We are now caring for more than 700 inpatients and nearly 3,000 outpatients every day. We have trained thousands of enlisted technicians and hundreds of physician and nurse specialists. More than 80,000 babies have been born at William Beaumont General Hospital—this is more than the entire population of El Paso 50 years ago. More than 315,000 inpatients have occupied the wards of William Beaumont General Hospital—almost the equivalent of the entire population of El Paso today.

As stated previously, only the exterior appearance of the buildings has remained relatively unchanged. There are those who would say that they look every bit of their 50 years. But this, too, is changing. Above us rises the new 611-bed, $17.5 million, high-rise William Beaumont General Hospital—a landmark for the entire area, and the largest and most modern of all the newly constructed Army hospital buildings. Now ahead of schedule in construction, this beautiful building will be our home for the second half of our first century.

This new facility will greatly enhance our capability to carry out the three principal missions we perform. First, of course, is patient care. Along with active military personnel and their dependents, 16,000 others consisting of retired members and their dependents require medical service. Also, William Beaumont General Hospital serves as the Veteran's hospital for the El Paso area; referral hospital for all military hospitals in Arizona, New Mexico, and West Texas; evacuation hospital for patients from overseas; and medical facility for the Apache Reservation, La Tuna Federal Correctional Institution, and NATO personnel receiving training at Fort Bliss.

Second, we are engaged in extensive medical research employing a large and sophisticated research department. Many of the newest items of equipment are in use, including some that are not in use anywhere else in the nation.

Finally, we are engaged in a comprehensive training program. A constant contingent of 75 resident physicians and dentists, 25 interns, and 200 other medical personnel pursue courses related to their professional specialties.

Expansion of the home and hospital dialysis program for patients requiring the service of an artificial kidney, and application of cobalt and deep X-ray therapy are two very important functions of the new hospital.

Medical service and related scientific progress over the years have been a genuine source of pride at William Beaumont General Hospital, and we look forward to even greater progress in the next 50 years.

Come on troopers, where are those comments from the field? How about those letters to the editor and contributions to "Guided Missile Lore"? This is your publication, so let's keep things rolling. The address to contact is on page 109 of this issue.

Airspace Coordination–A Flaw in Army Operations

Lieutenant Colonel Joseph T. Hicks
Office of Doctrine Development, Literature, and Plans
US Army Air Defense School

"I have only been in aviation 3 years and have witnessed two midair collisions. The reasons for both were the same: an aircraft being in an area where it didn't belong, and inattention." Those were the words of CW2 Randall B. Cassels in an article written by him which appeared in the July 1971 issue of US Army Aviation Digest. Let me briefly relate how this midair collision happened.

CW2 Cassels while stationed in Vietnam was preparing his "C" model UH-1 gunship for a scheduled mission. At the scheduled hour he and other pilots, crewmembers, and participating personnel were on their way. The object of the mission was to get on the ground, surround a village, and capture it. Landing zones (LZ) were situated to cut off the enemy escape routes into the woods.

The mission progressed nicely, and it looked like everyone would be "home" by 0100. They knew that cold beer and hot chow would be waiting, and they were doing their best to make things go smoothly and quickly.

At last came the welcome radio call from flight lead that the pickup zone (PZ) was clean and that the last inseration was in the air. Two of their best pilots were flying lead and were doing an excellent job. Both had less than 30 days left in-country. As the flight came in on short final for the LZ, there was a tremendous explosion, followed by a terrified voice screaming over the radio----------"Midair! Midair!----------lead has had a midair collision!"

After several minutes of stunned confusion, an aircraft check was made to determine who had collided with the lead aircraft. One of the command and control (C&C) ships had given a light fire team (LFT), which was not associated with the mission, permission to reconnoiter the area of operation (AO). The wingship in the LFT apparently had not seen the flight, and the two aircraft collided. There were no survivors.

CW2 Cassels stated that he has related his story "because witnessing two midairs is enough to last a lifetime . . . enough to make me constantly aware of and alert to the danger involved flying in crowded airspace."

Since the early 1960's there have been 56 or more midair collisions involving Army aircraft, and this is cause for definitive action to make the skies as safe as possible for our pilots, machines, and passengers. Ground combat has become three dimensional, contributed to largely by the helicopter. The introduction of maneuver into the dimension formerly reserved for fixed-wing assets and artillery projectiles has made airspace coordination a critical factor of command.

It should be clear that one of the most significant problems we are faced with in the Army today is airspace coordination and management. The lack of a unified Army approach to the solutions of this problem constitutes, in my opinion, one of the most serious deficiencies in our current concept of operation.

The systems which have been developed and used in Southeast Asia have functioned under the unique circumstance of complete air supremacy. It is doubtful that procedures we have followed there would be adequate if hostile air activity entered the picture.

To prevent conflicts, the force commander must be responsible for the coordination and control of his assets operating in the airspace over his area of responsibility. These assets, which include small arms, field artillery, air defense artillery, Army aviation, and supporting aerial vehicles of other services, must be immediately responsive to the needs of the commander. The force commander must minimize mutual interference between assigned, attached, and supporting airspace users to exploit their full capabilities.

Present doctrine lacks cohesion, and procedures for control and coordination of airspace users are restrictive and impact adversely on operations of the ground force commander. Army doctrinal manuals normally reflect airspace control or coordination from a proponent's point of view and fail to consider all airspace users and how they interact with each other. The lack of agreed upon joint doctrine between the Army and Air Force apparently is the reason given for the Army's procrastination to attempt to solve its airspace coordination problem. General Palmer, the Army Vice Chief of Staff, stated at the 1971 Air Defense System Program Review: "I think we are on the right track on that one: tying airspace control to air defense; air traffic management to fire support coordination—all of

that together. Well, gentlemen, we have got to get our own house in order if we are going to get anywhere with getting joint agreements with the Air Force."

Staffs at several installations, activities, and agencies have given considerable thought to the problem of airspace coordination and have conducted studies and given presentations on their findings. The Air Defense Center Team at Fort Bliss, Texas, formally recommended in 1970, as an initial step toward an integrated system of complete airspace coordination over the combat zone, that the mission of air traffic control be assigned to air defense artillery. While there was agreement that something must be done, the reactions of most who commented on the proposal were mixed, with perhaps a majority taking a position against having a single Army agency charged with the assignment of this responsibility. There appears to be a fear that the air defense artillery (ADA) will not be sufficiently responsive to the needs of the commander. I believe this fear to be unwarranted. At about the time the Air Defense Center Team proposal was forwarded, an in-depth study was initiated by the US Army Air Defense School (with participation by Center Team members) to identify problems associated with all aspects of airspace management and coordination. The end result of this study was to establish an Air Defense Center Team position regarding the role of ADA in providing effective coordination of the use of airspace over the field army.

The average ground commander has not operated against an enemy air threat, but our ADA weapons can be a threat to our own aircraft, and this danger to our aircraft will increase when an enemy occupies the same airspace. Now is the time to work out procedures because the airspace in the future will undoubtedly become more crowded. We must have workable procedures prior to becoming involved in a midintensity war. Air defense artillery has radars deployed throughout the field army area which are manned on a 24-hour basis, currently works closely with the Air Force, and must keep track of airspace users in any event to distinguish between friend and foe. In consideration of these reasons, and as the most cost-effective means, Department of the Army should assign the airspace coordination mission to the air defense artillery in order to dispatch the intra-Army problem with haste. Then, the major interservice problem can be approached from a unified position.

Talkeye (A Unique Battlefield Identification/Communications System)

Until the forward area alerting radar (FAAR) is fielded, forward area air defense units are without individual forward area weapons (FAW) identification, friend or foe (IFF), capabilities. Forward area air defense systems are dependent on rear echelon radar IFF systems for transmission of target information. Rear echelon radar systems, however, are restricted and less effective against low-level, terrain-following attack aircraft. Presently FAW systems rely on visual acquisition of targets for initial detection and identification. Command and control of forward area systems, and the transmission of the description of the total tactical situation, are accomplished by time-consuming voice communications networks. The delays involved in handling target information may be highly detrimental to FAW system effectiveness. However, to close this gap in forward area IFF, General Dynamics Pomona Division has developed a laser communications device incorporated in standard military binoculars (fig 1). The device, called "Talkeye," provides a short-range, interference-free, secure communications network. This article presents some new concepts in the use of laser techniques in the areas of hand-held IFF and communications systems.

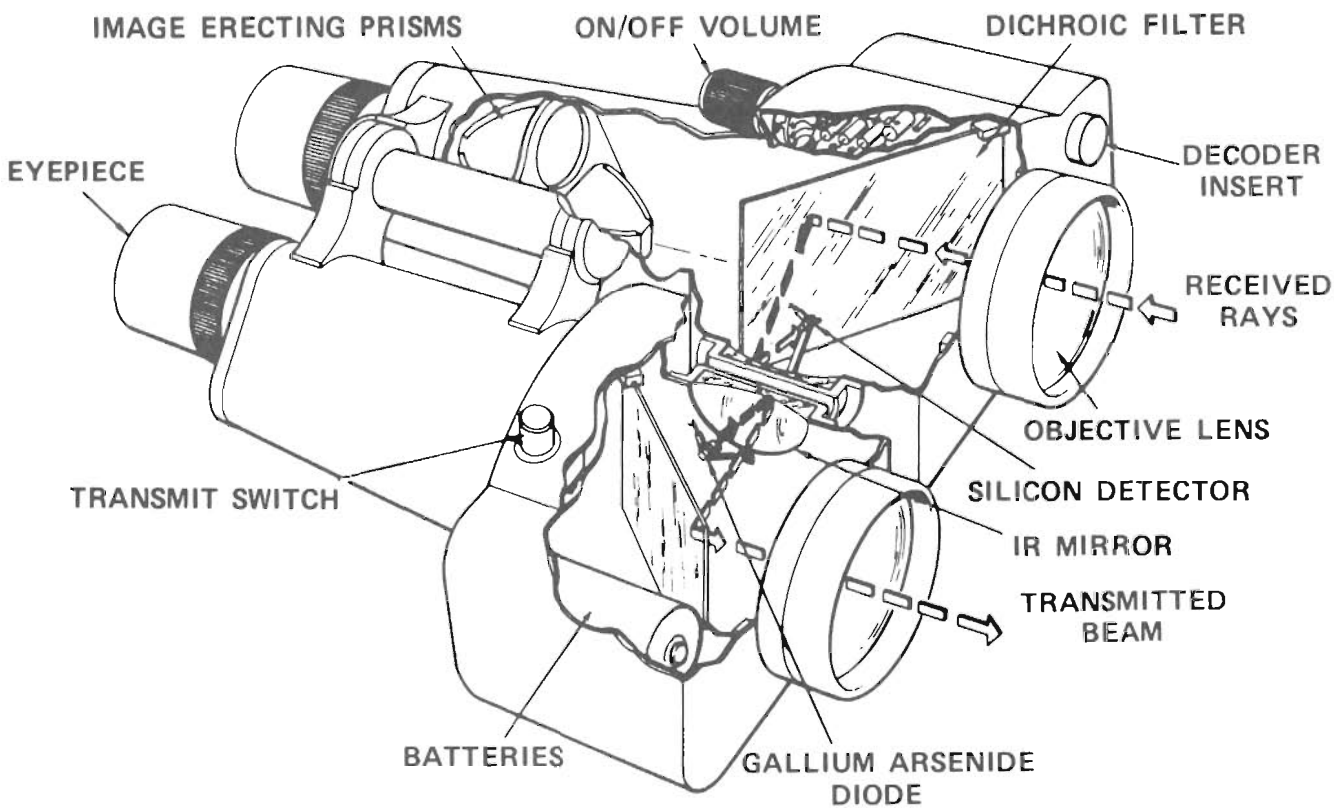

Figure 1. Laser IFF/communications binoculars.

FORWARD AREA TACTICAL SITUATION

Forward area weapon systems must be properly equipped to cope with the known tactical situation. The tactical threat encompasses various types of assault aircraft, from those of low-velocity to those making high-velocity penetrations. The logical attack mode is low-level assault, employing terrain masking and altitudes below rear echelon radar capabilities. The initial target detection often can be attained by forward observers and FAW systems personnel. The man-portable laser IFF system provides FAW personnel with the means to individually identify the target and handle the tactical situation.

LASER IFF/COMMUNICATIONS SYSTEM

The laser IFF system (fig 2) was designed with due consideration given to the RF transponder equipment already existing on military aircraft; however, the desired selectivity in challenging an aircraft is not possible in a truly man-portable antenna at L-band. Higher frequency; i.e., shorter wavelength, is required to produce a beam narrow enough to insure that challenge/reply involves only a single aircraft.

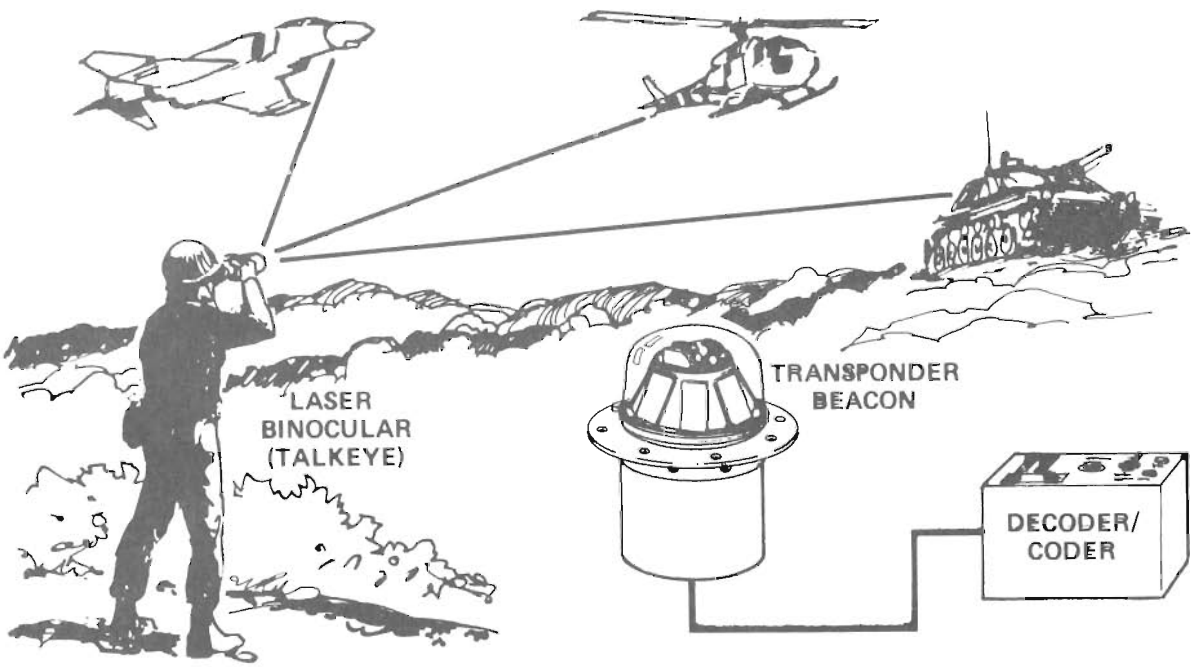

Figure 2. Laser IFF system link.

The interrogator electronic circuitry is built into binoculars and produces a challenge beamwidth of 0.5°. A receiving beamwidth of 2° is used. Most forward area weapon teams carry binoculars, and the additional weight of approximately 1 pound for batteries and electronics is hardly noticeable. The interrogator can be incorporated into weapon sights as part of the actual weapon if so desired.

The transponder beacon located on the vehicle to be identified is housed in a typical anticollision light housing with a small control panel placed appropriately near the operators. The transponder beacon is inactive until properly challenged by code, after which it replies for a brief time to insure reception of the coded reply by the interrogator.

The interrogator electronics of the laser IFF can be incorporated into a laser illuminator and employed as shown in figure 3. The objective lens of the sight can serve as the collecting lens for the reply laser beam which then is diverted into a detector by a dichroic (two-color) mirror. The additional weight involved amounts to less than a pound.

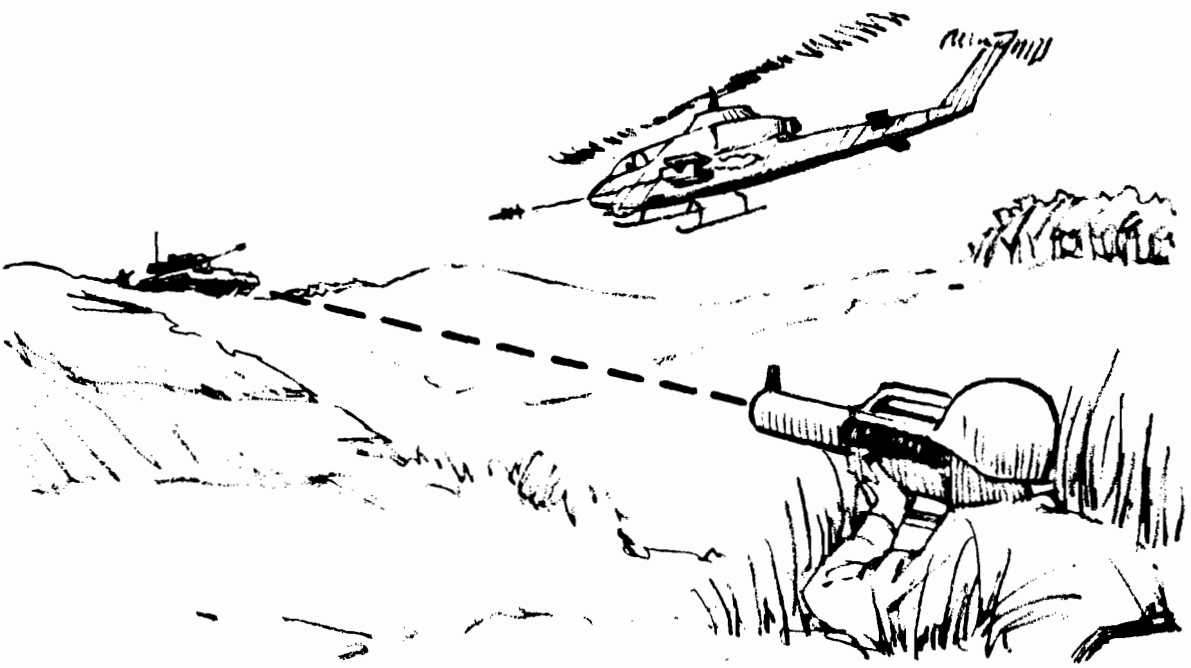

Figure 3. The laser illuminates a target which is picked up by a sensor in the helicopter.

The laser IFF can also be readily incorporated into such weapons as TOW, the tube-launched, optically tracked, wire-guided missile. Additional uses in battle areas include identification and/or secure communication with patrols, command posts, forward area observers, and vehicles. "Hellfire," employing helicopters, is an example of an air-to-ground weapon system which can benefit from long-range IFF. Many such airborne weapons have effective ranges which exceed the available means to identify. Delays in engagement result, and preferred battle positions are compromised. The laser IFF system can measurably add to the overall weapon system effectiveness.

Voice communication is a secondary feature of the man-portable IFF system. Voice communication to the vehicle is possible with the current design or from binocular to binocular.

The long-range weapons employed by tanks make identification of friend by an electronic system very desirable. The Talkeye interrogator can be incorporated into the tank weapon sight with specific light and tone indicators provided for "friend" identification. The transponder beacon attached to friendly tanks provides omnidirectional reception and reply for IFF operation with both ground-based and airborne interrogators.

THE INTERROGATOR

Figure 4 is a block diagram of the communication interrogator. In the transmitter, voice information modulates the repetition rate of a local 8,000-pulse-per-second carrier generator. The pulse-forming network shapes the pulses into 50-nanosecond pulses which a high-current pulser drives through the laser diode. For IFF operation, the microphone is switched off and an encoding network switched on.

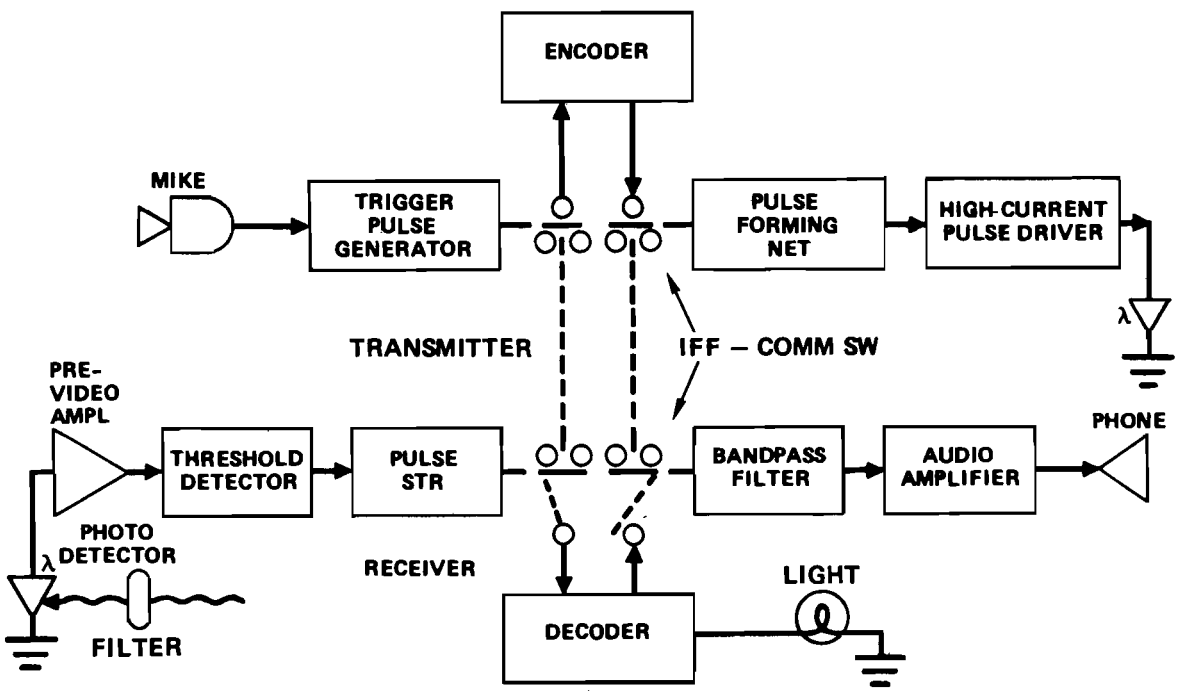

Figure 4. Laser IFF/communications interrogator.

In the receiver, the laser power signal is received at the photodiode and converted linearly into a corresponding signal current which drives a current-mode, low-noise, wideband preamplifier. Further signal amplification brings the signal magnitude to the level of the threshold detector. The narrow pulse thus is detected, stretched out, and integrated to receive the voice modulation.

For IFF operation, the detected pulses are fed into a pulse decoder where the information is recovered.

THE TRANSPONDER

The transponder beacon is shown in an existing anticollision light housing (fig 5). The transponder must be capable of receiving over a complete hemisphere. This is accomplished by an array of silicon detectors (covered with narrow-band filters to shut out the background) oriented to provide a near uniform detection area for any angle of view within the hemisphere. An eight-detector array was selected to provide a sufficient detector area for the range specified.

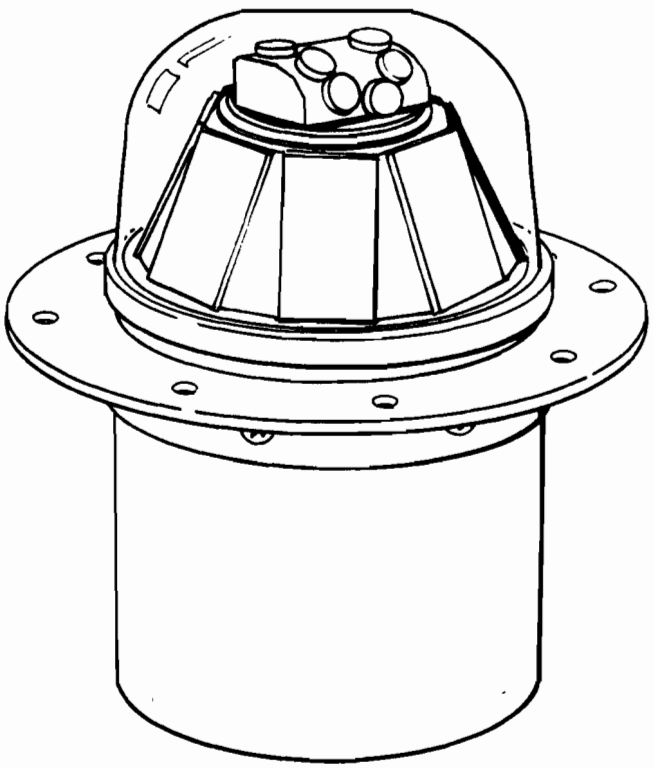

Figure 5. Transponder beacon.

The inner cylinder contains the pulser circuit with an array of six laser diodes mounted on top. Each diode generates 35 watts peak power. The cylinder rotates at 0.5 revolution per second so that the fan beam generated by the diode array will sweep a hemisphere in 2 seconds.

Functional Operations:

The laser interrogation beam is received and tested by the decoder as to the proper code.

If the code is acceptable, the proper reply pulse code is generated by the coder and the transmitter (pulser-diodes) transmits this code continuously for a specific number of seconds and then turns off.

Indicator lamps, interrogation and reply, alert the operator to IFF activity.

The preamplifiers are packaged in a sealed case on the rear of the detectors with the rest of the receiver circuits in the lower metal housing. The coder-decoder and audio circuits are packaged in the control panel.

The circuitry for the transponder (fig 6) is similar to that of the interrogator. The background filter passes the laser energy to the detector. A threshold circuit is adjusted to reject receiver and background noise. The arrival of pulses is detected, and status lamp INTERROGATION is lighted. If the proper code is decoded, status lamp REPLY is lighted and a timer controlling the transmitter is activated.

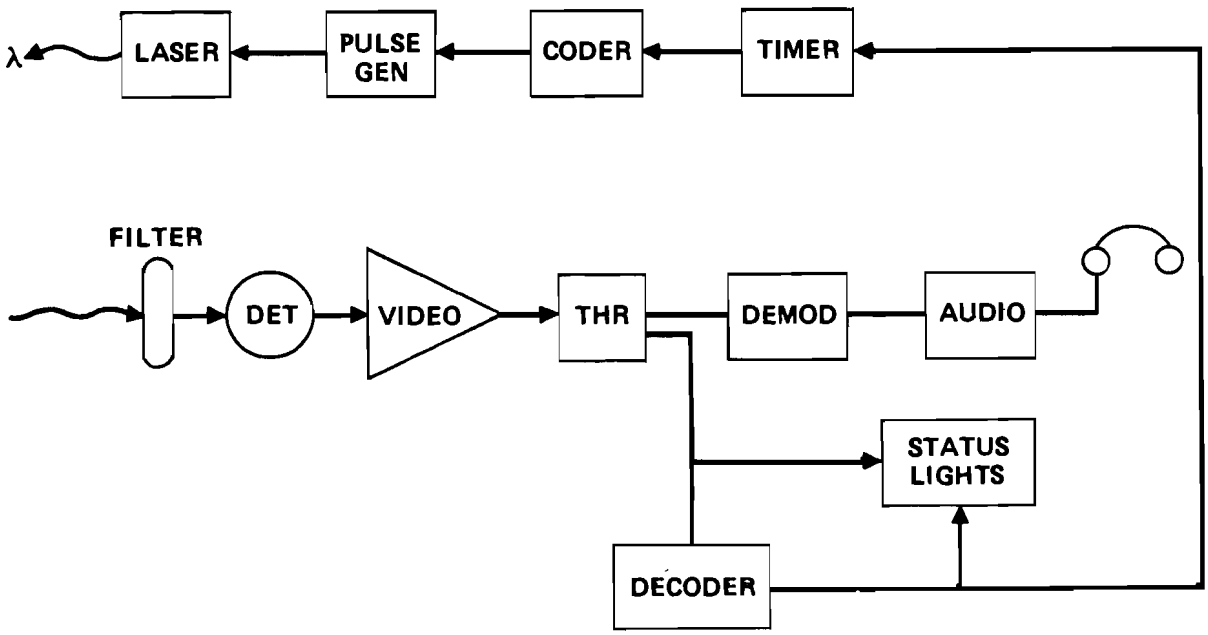

Figure 6. Transponder block diagram.

Voice communication can be received by the transponder and injected into the vehicle audio system. The ability to transmit voice in reply is possible, but the communication to any one spot is discontinuous due to the sweeping fan beam. Directional, continuous voice transmission is possible but adds to the sophistication and cost of the system. Techniques to incorporate voice communication from the transponder are being studied.

Three transponder beacons (one coder-decoder) are proposed for most low-wing aircraft. The stores carried on the pylons would give blockage to a single beacon located on the fuselage. Pylons are described as attachments to aircraft that facilitate carriage of ordnance, fuel tanks, engines, and accessories. A single beacon on the fuselage will probably suffice for high-wing aircraft.

The outer pylons offer the prime transponder beacon locations for covering the lower hemisphere due to ease of mounting and available cable runs. The beacon requires a

three-wire cable (input, output, and power) with appropriate grounds. These wires are probably available as spares in existing cable runs to the pylons.

The transponder beacon is small and lightweight and would be easy to install on the aircraft.

The installation of beacons on helicopters is relatively simple. Helicopter design permits easy access to mounting locations and cable runs. Coverage would probably be about 98 percent.

The beacon designed for tank-type vehicles would provide a coverage of -30° to +60° in elevation and 360° in azimuth. The elevation coverage can be extended to +90° to insure IFF performance with challenging aircraft. The beacon would be mounted on a telescopic support. The retracted position would provide mechanical safety when traveling through dense foliage. The extended position would insure a good vantage point for total coverage regardless of tank attitude.

SUMMARY

This article has addressed the forward area air defense weapons IFF problems. Considerations for battlefield IFF have also been treated. The detailed description of the laser IFF/communications system, using Talkeye binoculars for some of the applications, has shown a simple, yet effective man-portable IFF solution to specific problems.

This laser IFF system has application for all three modes: ground-to-air, air-to-ground, and ground-to-ground. The IFF range is compatible with the weapon needs and visual detection capabilities.

Secure communication is an important secondary feature of this proposed system. Communication can be utilized in such roles as directing aircraft into dangerous tactical locations, directing tank movements, and communicating with remote groups.

The man-portable laser IFF system is configured for use by the Redeye, Chaparral, and Vulcan forward area weapon teams. The binocular interrogator gives these teams an IFF capability within their existing equipment; however, the interrogator can be incorporated into the actual weapons if this approach is desired.

The laser IFF/communications system also can be incorporated into other optical devices such as space-stabilized binoculars and night vision scopes.

Continued development of the system will result in instruments with configurations similar to those shown in figures 7 and 8.

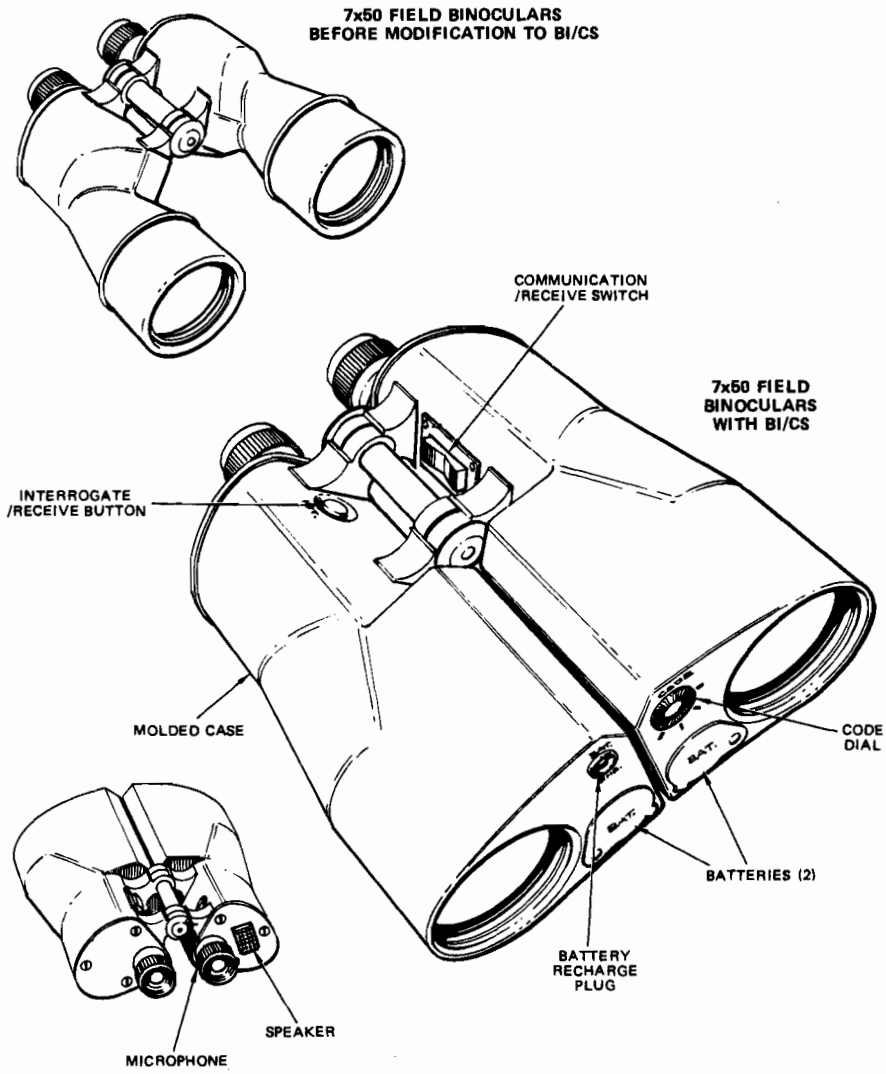

Figure 7. Advanced configuration.

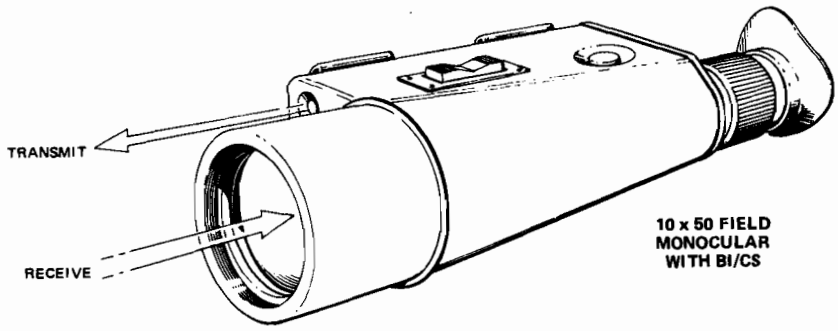

Figure 8. Monocular configuration.

Did You Know?

Watch this space in each issue of Air Defense Trends for information emanating from the Air Defense Artillery Branch, Office of Personnel Operations, Department of the Army. Questions may be directed to the appropriate action officer whose name and telephone number appear at the end of the related topic.

The information herein is the Air Defense Artillery Branch interpretation of current policies and programs. It is not an official Department of the Army publication.

—Ed.

OFFICER ASSIGNMENTS

Attention Colonels

Both the name of and the telephone number for the air defense artillery colonels assignment officer have changed. LTC Charles C. Scott is now assigned to that position, and the telephone numbers are OX3-1470 or 3-1471. (LTC Eye, OX3-1426)

Acknowledgement of Receipt of Preference Statements

The Branch has recently initiated a policy of acknowledging receipt of preference statements. We feel that this will be a valuable service to our officers because they will know that their latest preference statement is being considered when determining their next assignment. To acknowledge receipt promptly and keep the additional clerical workload to a minimum, DA Form 209 (post card), Delay, Referral, or Follow-up Notice, will be used. (LTC Lambert, OX3-1370)

Placing Priorities in Early Career Development

DA Pamphlet 600-3 describes the first 8 years of commissioned service as the basic military development period. Particular emphasis during this period is placed on troop duty and experience with air defense artillery units. It is a critical period in the development of an officer, and when you are considering your career needs and personal desires, you must keep these thoughts in mind. There is a time and a place in an officer's career for civil schooling or entry into a specialist program, but generally you should consider these only after you have satisfactorily accomplished your own professional development at the unit level. The often-mentioned milestones of branch material troop experience, command, and graduation from the advanced course are the vehicles through which this professional development is achieved. Before contemplating civil schools or any of the specialist programs, the junior officer must insure that he has successfully passed the developmental milestones. (MAJ Williams, OX3-1177)

Timing of Assignments

Numerous letters and telephonic requests are received daily by the Branch seeking assignment information. In many instances we are unable to provide exact information

because we have not received our requirements for the period that coincides with the officer's availability month. The following is an explanation of the timing of assignments worldwide:

CONUS requisitions are received at Branch bimonthly and are for a time frame 4 to 5 months in the future. These requisitions are normally filled with officers returning from overseas. The following table depicts the CONUS requisition cycle, and by determining your availability month, after allowing for leave and travel, you can determine the month during which your assignment is being finalized.

Requisition for title month	Due in ADA Branch
January - February	September
March - April	November
May - June	January
July - August	March
September - October	May
November - December	July

Oversea requisitions are received at Branch monthly and are for an 8-month future time frame.

Requisition for title month	Due in ADA Branch
January	May
February	June
March	July
April	August
May	September
June	October
July	November
August	December
September	January
October	February
November	March
December	April

After each assignment has been determined, it is our practice to mail a short personal letter with an information copy of the request for orders to each officer. The officer should receive orders through his unit personnel officer shortly after receipt of this letter. If he does not, then he has an official document that he can present to his personnel officer to receive orders. (LTC Stoudemire, OX3-1370)

EDUCATION

Undergratuate Schooling for Warrant Officers

The Army has established the educational goal for warrant officers of an associate degree as a minimum. To assist them in achieving this goal, separate civil schooling quotas have been established for warrant officers in two undergraduate degree programs—the Degree Completion Program (DCP) and the Officer Undergraduate Degree Program (OUDP).

Complete details concerning these programs are contained in paragraph 11c, AR 621-5 (as changed by Change 8), and chapter 4, AR 621-1, respectively.

Quite often when a highly competitive warrant officer is asked why he has not applied for civil schooling, the reply is to the effect that he has not been able to acquire sufficient credits. What credits? Admission to most colleges that award an associate degree requires only a high school diploma or equivalent. The 2 calendar years authorized for study under the OUDP is more than ample to meet the 2 academic years (about 18 months) required to complete work for an associate degree. In short, a warrant officer who meets the eligibility criteria of the regulation should investigate the possibilities of submitting an application regardless of whether he has earned any college credits.

For those warrant officers who set their sights higher on a baccalaureate degree (and we encourage this), the road to degree completion may not be as long as envisioned. Again, the 2 calendar years of the OUDP represents between 2-1/2 and 2-3/4 academic years. Many schools, through their college of continuing studies, offer constructive college credit for military schooling and experience. To achieve the equivalent of 1 academic year of credits through this means is not rare. Thus, based on 4 academic years of schooling to complete degree requirements, it is practical for an officer with one-half year of college credits (15 to 21 semester hours) to consider applying for full-time civil schooling.

(LTC Myers, OX3-1390)

Warrant Officer Career Development Courses

Planning for the conduct of our warrant officer career development courses is in the final stages. Both the intermediate and advanced courses will be taught at the US Army Air Defense School, Fort Bliss, Texas. The first intermediate course is tentatively scheduled to begin on 8 February 1972 and close on 10 July 1972. A Department of the Army board will select approximately 30 warrant officers with between 5 and 13 years of warrant officer service to attend. The selection will be based on an evaluation of the individual's overall record with particular emphasis on manner of performance and future potential to the service. There is no requirement to submit applications.

The advanced course is expected to be scheduled for FY 73. The input will be 30 students with 13 or more years of warrant officer service. Selection criteria will be the same as the intermediate course. DA Pamphlet 600-11 lists other general information pertaining to both courses. (LTC Forte, OX3-1375)

PERSONNEL ACTIONS

Adverse Efficiency Reports

AR 623-105, Officer Efficiency Reports, requires that adverse ER's be forwarded to the rated officer for comment. However, adverse reports are very rigidly defined in that regulation, and it is entirely possible that, although an ER does not qualify as adverse in the strictest sense of the regulation, it may in fact contain derogatory comments and ratings. If, after review of an efficiency report, an officer feels that it is unfair or improper, he may appeal the report. Appeals are only advisable, however, if an officer can provide

substantive evidence to support his claim. A frequent misunderstanding exists on the processing of adverse efficiency reports. When these reports are forwarded by the indorser to the rated officer for his comments, the rated officer's comments do not constitute an appeal. Appeals (reclamas) are submitted and processed separately in accordance with paragraph 1-2e, AR 623-105. In any case, before making the decision to request a special efficiency report review, an officer should telephone or visit his career branch, review his records, and seek advice. Branch personnel management officers can recommend on the advisability of submitting a reclama.

Obtaining Copies of Efficiency Reports

The career branches of Officer Personnel Directorate are authorized to provide officers copies of individual efficiency reports only when such action is in furtherance of the branch's career guidance and management responsibilities. However, The Adjutant General, Department of the Army, will, for the fee prescribed in AR 37-30, reproduce and provide an officer a copy of one or more of his efficiency reports when:

- The officer is retired or his application for retirement has been received for processing by Headquarters, Department of the Army.

- The officer, if on active duty, or his deputized representative appears in person at an authorized location. These locations are:

Personnel Records Division, The Adjutant General's Office Building, 3511 South Carlyn Spring Road, Falls Church, Virginia 22041. Normal duty hours are from 0800 to 1630, Monday through Friday. Advance notice is required to insure availability and completeness of the file. For active duty officers, the advance notice is 4 workdays; for separated officers, it is 2 workdays.

US Army Administration Center, 9700 Page Boulevard, St. Louis, Missouri 63132. Normal duty hours are from 0730 to 1600, Monday through Friday. Advance notice requirements are the same as those required by TAG.

Exceptions to the requirement to appear in person may be granted when the officer needs a copy of a report in connection with an official personnel action and no other individual whom he can deputize is available. Officers assigned to career branches, to the Adjutant General's Office, Headquarters Department of the Army, and to the US Army Administration Center may not be deputized to obtain copies of reports for officers. Written requests for copies of reports required by an officer on active duty in connection with an official personnel action; e.g., ER appeal, should be submitted to The Adjutant General, ATTN: AGPF, Headquarters, Department of the Army, Washington, D.C. 20315. Requests from officers not on active duty should be addressed to the Commanding General, US Army Administration Center, 9700 Page Boulevard, St. Louis, Missouri 63132. No fee will be charged for reports required for an official military personnel action. (MAJ Riley, OX3-1375)

BRANCH STRENGTH

The latest strength of the Air Defense Artillery Branch is:

Colonels - 295	Captains - 1,770
Lieutenant colonels - 816	Lieutenants - 1,418
Majors - 928	Warrant officers - 899

Total 6,126

ENLISTED PERSONNEL MANAGEMENT

Office of Personnel Operations (OPO)

Senior grade, special category, and intelligence enlisted personnel should know the importance of the OPO Military Management File to their careers. This is the copy of their 201 file kept at the Enlisted Personnel Directorate in the Pentagon for use in making assignments, promotions, and other personnel actions. It is clear that keeping this file complete and up to date is crucial to a soldier's career, and there are several things a soldier should do to keep his file accurate.

First, he should make sure that his 201 file at unit level is complete and up to date, and that changes in his status are dispatched up the chain of command so as to reach the OPO Military Management File.

Second, soldiers in grades E-7, E-8, and E-9 should visit OPO's Senior Enlisted Control Division, room 1C724, to review their files personnaly whenever they are in the Washington, D.C., area. In lieu of a personal visit, an officer or fellow senior grader may be authorized in writing by a soldier to check the file. The authorization must be signed by the soldier whose file is to be checked, since access to personnel records is strictly controlled.

Third, the soldier should make sure his name, grade, SSN, and PMOS are on every piece of correspondence sent to DA for inclusion in his file, including photographs. Check chapter 3, section IV, AR 600-200, for the right attention line for mailing to OPO because the attention line depends on the MOS of the soldier concerned.

These documents form the nucleus of the OPO Military Management File:

- Current Enlisted Qualification Record (DA Form 20)
- Photograph (AR 640-30)
- Copy of letters of recommendation, commendation, and appreciation
- Copy of MOS evaluation data reports (EPEECO Form 10)
- School transcripts or certificates
- Any other document which may have a bearing on promotion, assignment, education, evaluation, etc.

Of particular importance are the preference statement and the evaluation data reports. Soldiers have a personal responsibility to submit their preference statements and to make sure that MOS evaluation tests are taken on schedule. However, both of these items are among those most often missing or outdated.

Recently, promotion activities were taken over from Enlisted Personnel Directorate, Office of Personnel Operations, by The Adjutant General. But it should be noted that the data which centralized promotion boards consider still come primarily from the OPO Military Personnel Management File.

In summary, soldiers should remember that every action by the Department of the Army affecting them—assignment, promotion, reclassification, qualitative screening, education, qualification, and evaluation—starts with a review of the OPO Military Management File.

Emphasis on Quality

The fact that the Army is currently directing much effort toward achieving its goal of being a truly volunteer organization by no means implies that anything short of a highly professional, quality Army will be acceptable. There may currently be some confusion among enlisted personnel as new policies are arriving in the field. It may appear at first glance that some of the new policies are inconsistent. Why, for example, is the Army seeking higher enlistment rates while, at the same time, it is invountarily releasing other personnel. The answer, of course, lies in the need to place decreased reliance on the draft as the primary source for younger soldiers while concurrently attempting to phase the overall Army strength down to lower authorized levels.

The Qualitative Management Program, announced in Change 41, AR 600-200, is a major feature of the new program. The first phase of this program extended to 30 June 1971 with the second phase commencing on 1 July 1971. The total impact of this program will have a far-reaching effect on the enlisted force. With career tenure governed by a combination of time in grade and time in service while qualitative screening of the enlisted force continues, personnel with a history of mediocre performance will no longer be retained in the Army. Complement this with the recent announcements raising promotion and reenlistment criteria and one soon gets the message that professionalism and discipline would not be compromised. All of these new policies point to the fact that the "automatic reenlistment environment" is a thing of the past.

Since under the new programs an individual must establish and maintain his military and technical performance and qualifications at a level which will insure his tenure as a career soldier, the logical question uppermost in the minds of most career soldiers is "How am I rated among my contemporaries, and how can I stay on top?"

The answer to the first part of the question lies partly with the Enlisted Evaluation System set forth in chapter 5, AR 600-200, and the Enlisted Efficiency Report and Rating System set forth in chapter 8, AR 600-200. The former provides an objective measure of the technical knowledge of an individual in his military occupational specialty code, while the latter is a subjective evaluation by the individual's supervisor of his job performance and potential. Both are given appropriate weight and together serve to determine if minimum qualifications have been met. They also rank the individual among his contemporaries

by grade and MOS. Placing consistently low can deny an individual the opportunity to compete for promotion, reenlistment, and other career opportunities.

This, then, brings us to the final point of which commanders, personnel managers, and enlisted personnel should be continuously aware. For an individual to be in the best possible position to compete in this highly competitive environment, he must be placed, within Army requirements, in a career field and MOS best suited to his prior experience, aptitudes, and potential. He must then be allowed to develop this potential to the maximum. Only then do both the Army and the individual benefit. The commander's responsibility to accomplish his mission is well understood and fully appreciated. However, now more than ever before, commanders and personnel managers must assess the potential impact on the careers of their personnel prior to any reclassification action between career fields or MOS. Additionally, misutilization of personnel, whether through malassignment or mismanagement, may seriously jeopardize an enlisted man's career in that personnel not actively engaged in the application of their primary skills tend to lose these skills. This places them at a disadvantage with their contemporaries during annual MOS testing. They may even fail to achieve the minimum score necessary to verify their PMOS. Failing to verify twice consecutively results in mandatory reclassification action, while three consecutive failures to verify an MOS can result in elimination from the service as set forth in chapter 2, AR 600-200.

In addition, a low score will have a tremendous impact on the individual soldier in many other areas. For example:

- A score below 70 in the preceding 12 months bars reenlistment. (To reenlist a soldier must have been tested in the preceding 12 months unless specifically exempted by HQ, DA.)

- A score below 100 is a bar to promotion qualification.

- A score below 70 is a bar to the award of specialty pay.

- A score below 130 (Combat Support MOS) or 120 (Combat MOS) is a bar to the award of superior performance pay.

Since MOS evaluation has such an important impact on the individual, commanders and personnel managers must insure, as well as the individual, that prior study and timely testing, as announced by DA, is completed. This, of course, includes the accurate and timely submission of the Enlisted Efficiency Report. Absence of current evaluation data can also have an adverse impact on many personnel actions and will result in loss of proficiency pay unless testing has expressly been excused by Department of the Army.

In summary, today's Army is moving rapidly toward a highly qualified, competitive profession where commanders and personnel managers must apply sound personnel management principles and individual soldiers must work hard to maintain their skills and a high level of performance. (LTC Woith, C&E Branch, Room 1E677, 71720)

CAP III Begins

Personnel managers at Department of the Army have a new tool to assist them in making assignments of enlisted personnel. Called Centralized Assignment Procedures (CAP) III, it now affects only senior grade, intelligence, and special category personnel, but eventually all enlisted personnel will be included in this comprehensive assignment system.

CAP III is a computer system which compares available personnel assets with known field requirements and then "nominates" one through nine candidates for each assignment. The system also provides for complete manual assignment selection, bypassing the nomination process, for such categories of personnel as command sergeants major and WAC's. After a personnel manager chooses the best man for the job, regardless of whether he was nominated by the system or manually selected, the assignment instructions are automatically sent to the field via AUTODIN. The utilization of electrical communications equipment is eventually expected to provide individuals with earlier notification of assignments.

CAP III is expected to improve every phase of assignment making; i.e., the validation of requisitions, the systematic application of established priorities, and the desired worldwide distribution of all enlisted personnel.

Special MOS Evaluation Testing for Reenlistment or Promotion

The Enlisted MOS Evaluation System has been expanded and is now more important than ever. In fact, many soldiers will not be eligible for reenlistment or promotion without taking one of the new special qualification tests. The tests are in the same form as the regular MOS evaluation tests, and if you meet the following requirements, you will have to take one of them.

- To be promoted in an MOS other than your PMOS, you must take the Promotion Qualification Test. To take the test you will need your commanding officer's recommendation and a score of 100 or higher on your most recent PMOS evaluation test. Procedures for promotion qualification testing are contained in DA (COPO-EPPME) message 221314Z Jun 71.

- If you want to reenlist and do not have a PMOS evaluation score of 70 or higher in the last 12 months, you must take a Reenlistment Qualification Test. Procedures for this testing are contained in DA (COPO-EPPME) message 141335Z Jul 71.

These two special testing programs are aimed at further improving the quality of the enlisted career force. They also emphasize that MOS qualification is the responsibility of every soldier as well as his CO and personnel office.

The TOW Missile System

The tube-launched, optically tracked, wire-guided missile (TOW) is the United States Army's new heavy-assault weapon developed to provide a major increase in firepower for ground and airborne infantry units. It is currently being deployed by the US Army in the United States and Europe as the primary antitank weapon at the battalion level. The weapon is also very effective against concrete fortifications, bunkers, and other hardened targets.

The missile and launcher systems have been in production by Hughes Aircraft Company for the US Army Missile Command since November 1968. Several European governments have test-fired the weapon. TOW missiles have recently undergone successful live warhead firings from the Army's new helicopter gunship, the AH-56A Cheyenne. The missile has also been fired successfully from the HU-1 Huey helicopter.

In operation of TOW, the gunner holds the crosshair of his sight on the target and presses a trigger to launch the missile. As the missile speeds to the target, it unreels two fine wires through which it receives steering signals. All the gunner has to do is hold the target in his sight. The missile will automatically follow the gunner's line of sight, impacting on the spot on which the crosshair is sighted.

Firepower tests have demonstrated that TOW can knock out any known enemy armor at ranges in excess of a mile. Tests with inexperienced troops have shown that, because of the weapon's automatic guidance and simplicity of operation, soldiers with only a brief period of training can become antitank sharpshooters.

Figure 1. ON THE WAY—The newly developed TOW missile streaks toward target a split second after firing.

Design simplicity of the TOW weapon system lends itself well to the harsh environment of the battlefield and gives the weapon great tactical flexibility and high reliability.

TOW can be employed from a variety of vehicles, including jeeps (fig 1), mechanical "Mules," and armored personnel carriers. The weapon may be fired from the vehicles, or it may be dismounted, set up on its tripod launcher, and fired (fig 2). It may also be used with a night sight.

The TOW's ability to knock out movign targets with first-round hits at either short or long ranges has eliminated the need for preliminary bracketing and has earned it a reputation of being the foot soldier's "great equalizer" against his classic enemy, the tank.

Figure 2. The TOW wire-guided missile is loaded by one soldier as another sights the target. The missile is loaded like a round of ammunition, and operation of the weapon requires no special missile training.

Troops can fire from a concealed position (fig 3), then pick up and move quickly before their position becomes known to the enemy. TOW can be fired from helicopters when the aircraft is hovering or traveling at top speed and maneuvering (fig 4). A gyrostabilized sight system automatically isolates the sight and sensor from helicopter vibration and motion. During missile flight the pilot may fly at any speed, make a sharp turning maneuver, or fly a zig-zag course. The missile will continue on its course to the target, impacting on the spot where the gunner's crosshair is sighted. Or a helicopter can rise from cover, fire at a tank, and (after impact) drop to cover again before an enemy knows what hit him. It has been said that the missile's capability in such tactics may change the entire concept of massed tank warfare as it has been fought in the past.

In operation, all the gunner has to do is to hold the target in his sight; the missile will automatically follow this line of sight. If the target moves, the gunner, following those movements with his sight, will automatically generate steering signals to the missile, and the missile will respond instantly.

TOW missiles are handled as a round of ammunition in a factory-sealed container which protects them from the dirt and moisture encountered in storage, shipment, or battlefield environment. The container also serves as an extension of the launching tube during firing (fig 2). The missile never leaves the container until it is fired. As the missile leaves the launch tube, its aerodynamic control surfaces snap open and the wires unreel from bobbins in the aft end.

Figure 3. An enemy tank would be a "sitting duck," even though traveling at top speed more than a mile away, for this concealed Army guncrew.

Figure 4. A TOW antitank missile, reflecting sunlight, is fired from an Army helicopter and streaks toward a successful impact on a fixed target more than a mile away during tests at Redstone Arsenal, Alabama.

Two rocket motors are used. One ejects the missile from the launcher tube but has completed burning before the missile leaves the tube (fig 5). At a short distance (sufficient to protect the gunner) from the launcher, the flight motor is ignited. The flight booster burns out in less than 2 seconds. The missile then coasts to the target, leaving no smoke trail or radiation signals that could be detected by the enemy.

The missile is 116 centimeters long and 15 centimeters in diameter and weighs 19 kilograms. In the US Army it will replace the 106-mm recoilless rifle and the Entac SS-11 missile.

Figure 5. TOW is caught by high-speed camera as it "whooshes" from launch tube during firing from an M113 armored personnel carrier at Camp Roberts, California.

Modern Volunteer Army and the Reserve Components

General W. C. Westmoreland, Chief of Staff, United States Army, recently commented on the road toward the goal of a modern volunteer army and the requirement for selected Reserve component units to maintain an unprecedented state of readiness as the Active Army strength decreases:

> . . . I have committed the Army to an all-out effort in moving toward a zero draft, volunteer force. Our task is not easy. The Administration has set as its goal reduction of draft calls to zero by the summer of 1973. To achieve this objective, the Army must more than double enlistments and reenlistments. This is probably the biggest challenge the Army has faced short of combat on the battlefield.
>
> Of primary importance, we must insure that any transition to a volunteer force does not degrade our effectiveness. The Army—Active and Reserve—must have the number of quality personnel in the skills deemed essential for national preparedness.
>
> The challenge is equally great for the National Guard and Army Reserve. You and I know that many who enlist in the Reserve components are draft-motivated. Moreover, the Individual Ready Reserve . . . vital as an immediately available trained replacement pool to fill Active and Reserve units . . . is sustained by current selective service legislation.
>
> For these reasons, I believe that selective service legislation must be extended past its 30 June 1971 expiration date. Moreover, even though we achieve a volunteer force, draft legislation should remain in force as national insurance.
>
> I want to emphasize, however, that we are moving ahead with all our energy, imagination, and best efforts toward the goal of a modern volunteer army. We are not giving "lip service" to this task. The President has given us a mission, and the Army is going to do its best. Our success will depend upon your best efforts as well. This is indeed a challenge to all of us on the one army team.
>
> How successful we are depends not only upon actions taken within the Army, but upon the undivided support of the Administration, the Congress, and the American people as well. Sufficient resources are required . . . and in this connection, I mean money. Moreover, public support for the Armed Forces . . . Active and Reserve . . . must be audible, visible, and tangible. We cannot attract the volunteers into an Army that is maligned by some, directly attacked by others, and halfheartedly supported by many . . . . Simply put, no amount of money will encourage a young man to enlist in an organization that is lacking in public esteem.

In addition, there are also things that can and are being done within the Army . . . . Let me briefly outline the road we're going to take.

First, the professional climate of the Army must be improved. This responsibility rests squarely on our leadership . . . officers and noncommissioned officers alike. Everyone in a position of leadership must work toward establishing higher standards . . . and insuring that our performance measures up to these standards. Most important, we must "practice what we preach" . . . by following the tried and proven principles of leadership that have long been the leader's guide to excellence in performance.

In addition, life within the Army must also be improved. We are reviewing all our policies and administrative procedures to make service life more attractive. As you know, actions have already been taken in this regard . . . actions designed to eliminate or alter policies and procedures that serve no useful purpose or do not contribute to mission accomplishment. We are studying other areas . . . seeking new ideas. Nothing is considered sacrosanct except where military order and discipline are compromised. In this we will not yield.

Looking to the future, I want to talk specifically about a "fact of life" that is of special importance . . . . The Active Army is down to 13-2/3 divisions . . . a high-risk force considering our commitments in support of national strategy.

Our smaller Active Army places a premium on Reserve component preparedness. Selected National Guard and Reserve combat, combat support, and combat service support units will have to maintain an unprecedented state of readiness. By "fleshing out" our Active force structure, these high-priority units are an important part of our contingency mobilization plans. This is equally true of the Individual Ready Reserve, our immediate source of trained individual filler and replacement personnel.

To meet readiness objectives, our Reserve components must have first-class materiel, facilities, and training programs. We are actively pursuing these goals. Equipment issued in fiscal year 1970 was twice the amount issued in fiscal year 1969 . . . and in fiscal year 1971 the amount was again doubled.

Modernization is a concurrent objective. For example, some 286,000 M16 rifles were transferred during the last fiscal year . . . almost one-half of the Reserve components' authorized allowance. In the case of Army aviation, inventories will be more than doubled in the next 3 years . . . and modern assets will increase from under 1 percent to more than 70 percent of authorized allowances.

But, modern equipment is not enough. Facilities—the armories and Reserve centers so important to the training mission—must also be upgraded. We are currently proceeding under a 10-year construction plan totaling $627 million.

In the area of training, emphasis is being placed on programs to increase Active Army support and assistance . . . as well as to increase combined Active/Reserve component training wherever possible. The success of the "roundout" training at Fort Hood attests to the benefits that accrue from such cooperative and realistic training. The battalions involved—from Arizona, Kentucky, Missouri, Tennessee, and Texas—are enthusiastic about this training and the challenge of their unique mission. Indeed, the National Guard Bureau tells me that other states, based on the success of the program, have requested to participate.

The Army also places great emphasis on the mutual support program, which pairs Active and Reserve component units in a close training and mutual assistance relationship. These units train together whenever possible . . . the Reserve component unit uses the Active unit's equipment . . . and both provide support in various functional areas—for example, augmentation maintenance support by the Reserve component unit. Such training programs make our one army concept a reality.

—Command Comment No. 77

History of Air Defense

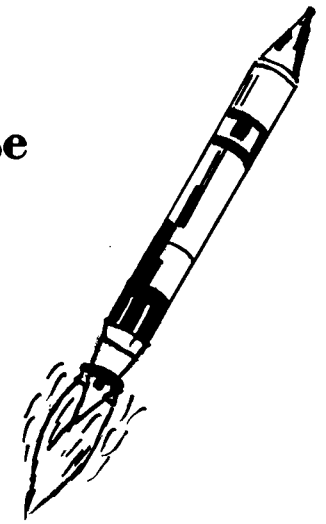

Editor's Note:

Aside from the Germans' surprise introduction of the jet aircraft, radar was the major technological advance which was to revolutionize the art of warfare; no longer was man limited to military actions requiring the use only of the eyes and ears. The offense and the defense both benefited from the new science, and all Services of all major countries made parallel, but noncurrent, advances. For that reason, discussion of the development of radar will comprise a separate article. This installment treats of air defense operations and includes references to the operational use of radar.

The early years of World War II served as a proving period for the organizations, weapons, strategy, tactics, and doctrine developed during the prewar period. As combat experience was gained, changes in organization and tactics were adopted to adjust to conditions encountered, and modifications and improvements in equipment received top priority. The superiority of the offensive airpower with which Germany commenced the war so overwhelmed the existing defenses of Poland, France, and the Low Countries as to preclude a significant test of the German defenses during the initial war years. British concentration on development of air defense of the home islands proved its value during the second year of the war.

The unified command over all air defense forces, established in 1936, proved to be so effective that it remained in effect throughout the war. The Air Officer who was Chief of the Fighter Command commanded all fighters and barrage balloon units and exercised operational control over antiaircraft, searchlights, and the observer corps.

The period 1939-1943 saw the fall of France, the evacuation of British forces from Dunkirk, the rehabilitation of evacuated units, and the scramble for new equipment which these evacuated personnel needed to ready them for the expected invasion by Germany.

A noteworthy antiaircraft action took place during the Dunkirk evacuation. The mole from which the troops departed at Dunkirk was defended by four Bofors 40-mm automatic weapons and one AA gun battery. Upon signal, a shrapnel and high-explosive barrage was laid above the mole at an altitude of 3,000 feet, whenever dive bombers appeared and started to circle preparatory to peeling off in their dive-bombing attack. In the first action,

the aircraft on the diving run were forced to take evasive action. Subsequent aircraft were forced to pull out of their dives at higher elevations to avoid the barrage. No hits were made on or near the mole by these bombers.

Large-scale German action against England began with an air offensive in August 1940, the Battle of Britain, which was largely a battle between the Luftwaffe and the RAF, although antiaircraft played an important role. The German objective was to gain air supremacy over the RAF; Goering hoped to gain air superiority in 4 days.

The early warning provided by coastal and two gun-laying radars at Dover enabled the RAF to conserve its fighter force by keeping most of it on the ground until an attack materialized, thus achieving a more efficient concentration of force. Ground observer reports were the only means of plotting aircraft after they had crossed the coast. While effective in daylight, this system was not adequate when the Germans switched to night attacks, for advance warning of the enemy's approach did little good unless he could be found in the dark. To meet this need, Sir Robert Watson-Watt and a group of British scientists concentrating on this problem were able to go beyond the original concept of radar, and they developed a whole new series of electronic devices to help guide every step in the process of intercepting planes.

A new ground-controlled interception radar in 1941 made it possible to plot and display on a plan position indicator (PPI) the position of a large number of planes. Airborne IFF (identification, friend or foe) equipment was developed to transmit coded signals when interrogated by a ground station, serving to indicate which of the targets on the PPI were friendly. This equipment, plus a new type of VHF radio, permitted controllers on the ground to issue instructions to their pilots and guide them into contact with hostile planes. To achieve interceptions at night, a new airborne intercept radar was developed with which the radar operator in the night fighter could guide his pilot to within a few hundred yards of an enemy intruder. These developments provided the British air defense forces a distinct advantage over the German offensive air forces.

By 1940, the introduction of night fighter techniques made it necessary to impose limitations on the fire of antiaircraft (AA) guns. On nights suitable for night fighter operations, the AA guns were prohibited from firing or were restricted to engagements at heights below the night fighters. (The joint use of airspace by antiaircraft and fighters became a problem which continues to plague air defense forces even today.)

In 1941, a new system of control was instituted for night fighters and antiaircraft fires whereby Fighter Command put up layers of fighters over a vital area being attacked. These layers ranged from 10,000 to 20,000 feet, with the guns restricted to engaging targets 2,000 feet below the bottom layer. General Sir Frederick Pile, in his book, ACK-ACK, described the ineffectiveness of this system, pointing out that on the night of 16-17 April, during one of the heaviest raids on London with this system in operation, only three enemy aircraft came within the antiaircraft zone of fire. He esimated that some 1,000 rounds had been expended at nonexistent targets to keep up civilian morale out of the comparatively small overall total of 5,888 rounds fired that night. He pointed out that when bombs started a fire, the Germans then leisurely would add to the blaze with complete freedom from danger of antiaircraft fire. He contended that fighters would have been employed better by meeting the invader on his way in rather than loitering over a city already in flames.

By 1941 the development of radar control techniques which permitted the controlling of fighters on interception missions began to produce some success. The advent of the searchlight control radar in 1941 also was a deterrent to German night aerial operations. This equipment resulted in a new searchlight technique, using an indicator belt and a killer belt. In the indicator belt, the searchlights were widely spaced, giving an area coverage which produced an indication of an aircraft's position. On the inner or killer belt, lights were closer together—about 6,000 yards apart—so the aircraft could be continuously illuminated for the fighter interception and kill.

By 1943 the use of radar had become commonplace in air defense units, and the need was recognized for the development of automatic radar. The improved use of radar in searchlight control and night airborne intercept brought some relaxation in the hitherto rigid system of fighter nights, where antiaircraft fires were restricted to give friendly night fighters freedom of action. By October, a new system was introduced whereby the height boundary between antiaircraft and fighter operations was agreed on at the beginning of each action at approximately the height of the highest raid in progress. This system made possible a fuller use of both guns and fighters. Using this system, and in spite of the German introduction of chaff, the antiaircraft ammunition expenditure during night attacks on London decreased to 3,200 rounds per kill.

After the failure of Germany to gain air supremacy through the Battle of Britain, the plan for the cross-channel invasion of England was abandoned. In March 1942 the "tip and run" raids began. These were raids by small groups of German aircraft delivered at random on the smaller towns of south and east England.

During 1940 and 1941 night intruder missions gave the British considerable trouble. German aircraft would join returning British bombers and, while the latter were approaching for their landing, shoot them down. This forced the assignment of more automatic weapons to the approach pattern of the airfields. By spring 1943 direct night attacks on airfields again were becoming heavy, and the British retaliated successfully by installing AA automatic weapon canopies, supported by searchlights, eventually on 76 airfields.

United States antiaircraft units arrived in mid-1942; the first unit to become operational was the 54th AAA Brigade. The units comprising the brigades were deployed throughout England, providing antiaircraft protection to American-occupied airfields, supply depots, and other installations. They operated as a part of the British air defense system.

While the British were being sorely taxed at home by the Battle of Britain, field forces in Libya were beset with difficulties. This campaign required assistance to prevent the fall of Egypt to the Axis forces. Malta, which had been subjected to continuous air attacks by the Italian Air Force, became the objective of concentrated attacks by German and Italian planes.

The original antiaircraft organization of the British Expeditionary Force (BEF) in France consisted of two antiaircraft brigades, four light antiaircraft regiments, and one searchlight regiment, totaling 72 heavy AA guns, 84 light AA guns, 192 light machineguns, and 96 searchlights. Control was exercised by the operations section of GHQ, BEF. With French assistance this quantity of antiaircraft provided cover in accordance with prewar doctrine, although

in few places, if any, were the standards of a 16-gun density reached. Of the four light antiaircraft regiments, one was assigned to each of the two corps, one was assigned to the defense of RAF airfields, and one was assigned to defend line of communications installations. Of the two brigades, one defended the base ports and the other defended troop concentration areas, railheads, and the GHQ. Radar was not yet available. Searchlights were first used in support of RAF fighters to light an air fighting zone covering the northern flank of the BEF.

German dive bombers attacking field artillery positions soon made it necessary to include a light antiaircraft regiment in the British divisions. Experience soon proved that AA gunfire could cause dive bomber formations to break up and thus degrade the accuracy of their bombing

By the end of 1939 the antiaircraft forces were reorganized and strengthened by two additional antiaircraft brigades. A major general was appointed to advise the commander-in-chief on antiaircraft matters and to command all antiaircraft units except the corps light antiaircraft regiments and the light antiaircraft units allotted to the Advanced Air Striking Force to defend its airfields. Barrage balloon units, with 24 balloons each, were added early in 1940 to the antiaircraft defenses of Boulogne and Le Havre.

By March 1940, the Air Fighting Zone was discontinued because of French insistence on freedom of fire for their AA guns against unobserved targets and due to the existing shortage of British fighters. The searchlights then were redeployed to resume their normal role in support of heavy and light antiaircraft gun units. Some were used later to defend small vital areas by providing a dazzle effect against enemy pilots.

In April 1940 an antiaircraft operations room (AAOR) was opened at Arras, greatly improving the antiaircraft intelligence system. The AAOR received information from the RAF filter room on all friendly, hostile, and unidentified aircraft and passed such information on to the gun operations room (GOR) in each defended area. This eliminated the necessity for guncrews to remain on a constant state of alert and simplified the difficult problem of identification at the gun positions. Restrictions on fire designed to protect friendly fighters were imposed in October 1939.

The resources available to Middle East forces, up to and immediately following the fall of France, were meager, and with the entry of Italy into the war on 10 June 1940, the situation became increasingly serious. Antiaircraft units were woefully short in number. A brigadier arrived in Egypt to advise on all antiaircraft and civil defense matters and to command all British antiaircraft and civil defense units not assigned to subordinate commands. So many calls for antiaircraft were made that an Inter-Service Air Defense Committee was formed at GHQ Middle East to suballocate AA guns to Middle East defenses. In November, the brigadier also was assigned responsibility for passive air defense.

In North Africa, a temporary early warning system was established along the coastal plain as the advance proceeded, with a gun operations room collocated with the RAF sector operations room and connected by telephone with antiaircraft director centers, naval officers-in-charge at each port, all gun positions, and selected searchlights. In January 1941, a brigade headquarters and the first antiaircraft gun regiment arrived in the Western Desert area. The brigade took control over all antiaircraft units in the coastal area. In the rear areas, priority was given to supply ports and airfields, but the latter received practically no AA

guns, and their automatic weapons allotment was limited to two 20-mm or 40-mm automatic weapons. In the forward areas, priority for divisional AA weapons was given to protection of field artillery areas, divisional motor transport areas, reserves and landing grounds, and forward dumps, in that order of priority.

The dispatch of practically all available fighter aircraft and AA guns to Greece left little air defense effort to meet the German offensive from Libya (begun in February), and by March enemy air superiority had been definitely established. The British ground forces were forced back, and movements could be made only at night.

The Germans enjoyed an overwhelming air superiority in their attacks on Greece in April. The combined British-Greek air defenses were too small to offer much resistance. A similar situation existed prior to the fall of Crete in May 1941.

After the second attempt to seize Tobruk failed in early May 1941, the Germans used concentrated air attacks to close its harbor. The brunt of the defense fell to the antiaircraft defenses which were organized into two commands under the overall command of the 4th AA Brigade—one command for the defense of the harbor and the other to defend the field artillery positions plus various headquarters around the perimeter.

With priority going to the Tobruk defenses, there were few antiaircraft units available to cover other demands in the Western Desert, and the few units allocated were spread over great distances. During the 8 months the Germans concentrated on the unsuccessful air seige of Tobruk, their air attacks on other targets were diminished, with Alexandria receiving only 22 attacks and the Suez Canal ports 21.

With the opening of the Russian front in the summer of 1941, the air defense situation in the Middle East ceased to be critical. Up to this point, fighters and antiaircraft had fought more or less independently. Each had been too busy with its own battles to develop the cooperation that had proved so effective during the Battle of Britain.

By November 1941 the British forces had numerical superiority over the Germans in Africa. The divisional automatic weapons regiments had been brought up to strength in most cases, and the RAF was able to provide air support for the Army. The war of maneuver was resumed but with disappointing results. By the end of 1941 the situation was again in a relative stalemate of watching, probing, and harassing. Inferior tactics and inferior equipment were blamed for the failures, and a general reorganization was undertaken.

In May 1942 the decision was made that in any field force the Royal Artillery commanders would advise their respective commanders on the employment of antiaircraft artillery units as well as on the coordination of all other artillery units.

In 1942 both RAF and antiaircraft units were reinforced substantially. By August, the Middle East antiaircraft forces, exclusive of Malta, contained 490 AA guns, 840 automatic weapons, and 170 searchlights. With the increase in RAF units and airfields, the demands for antiaircraft protection remained high. Early warning nets were established, and radar sets became available. Early warning was passed to the AAOR's and on to the gun positions. However, low-level air attacks continued to evade the radar nets and continued to represent a serious threat.

By early 1942 the Germans had transferred an entire air fleet to Sicily, and air attacks on Malta became very heavy. By early May the fighter defenses on Malta were so depleted that the antiaircraft artillery was forced to provide the bulk of the air defense effort.

With the British breakthrough at El Alemein in early November 1942, the war of maneuver was resumed as the Germans fell back and the British pursued toward Tripoli. The RAF had established sufficient air superiority to make enemy air activity relatively slight, except in the forward battle areas. Even there, dive bombing gave way to low-level attacks, but enemy planes avoided the Bofors 40-mm positions.

After the capture of Triopli the Eastern Mediterranean Command was charged with all static antiaircraft defenses. The 12th AA Brigade was assigned continuing responsibility for defending airfields against air and ground attacks and for maintaining liaison with the RAF. Close cooperation between the antiaircraft and the RAF was facilitated by keeping the same antiaircraft brigade on airfield defense duty, thus maintaining adequate air defense even during periods of displacement of forces. This responsibility overextended the 12th AA Brigade, and by the end of November 1942, its units were spread out over a 700-mile area.

In early January 1943 the air defense system throughout the Eastern Mediterranean was reorganized along the lines which had proved so successful in the air defense of the United Kingdom. The Commander AA Group, Eastern Mediterranean, was made responsible to the RAF officer designated as air defense commander. The interservice defense committee was phased out, with the joint operations staff taking over the functions of recommending priorities and preparing plans for the distribution of all available air and antiaircraft defense forces. An exception was made in Tripoli, at the request of the Eighth Army Commander, where antiaircraft remained under his control due to the vital importance of the port facilities to his operations. The 12th AA Brigade continued to provide for the defense of airfields and advanced ports supporting Eighth Army and worked out an effective system of providing prompt air defense for new airfields as they were opened during the pursuit operations.

The tactical control system was improved by the introduction of a mobile gun operations room equipped with a light warning radar, a radio, and telephone communications, plus plotting equipment sufficient to direct 12 antiaircraft gun positions. This organization was especially useful in assault landings, where it served as an early warning center by filtering and broadcasting information received from the RAF, radio direction-finding ships, its own radar set, and the radars of the light antiaircraft regiments when available.

To meet the increasing enemy low-altitude attacks out of the sun, the 12th AA Brigade instituted automatic weapons "sun barrage" tactics. Friendly aircraft were warned that any aircraft approaching a landing field from out of the sun would be considered hostile. When an aircraft was heard to be approaching out of the sun, an automatic weapons barrage was fired on the anticipated line of dive, and antiaircraft gunfire was concentrated at a point 4,200 yards from the center of the vital area. Success forced the enemy to give up this method of attack.

The British First Army also encountered difficulty with diving and low-flying targets. Automatic weapons gave warning to road convoys of approaching raids. Single guns, deployed at 9-mile intervals, fired warning shots based on raid information furnished by the gun operations room. Experience in Tripoli showed that, for a small defense, 24 searchlights (eight

radar-directed) would be able to illuminate a high proportion of hostiles long enough for the guns to engage effectively. In May 1943 six composite batteries were formed, each having twelve 40-mm automatic weapons and nine searchlights.

At Salerno a large antiaircraft force was landed on D-Day, with each of the three beach groups being supported by eight heavy and 18 light AA guns. A regimental commander and elements to form an antiaircraft operations room were landed with the assault elements to establish coordination over the antiaircraft defenses of the three beaches. By D + 3 the defense had been increased to 48 heavy and 162 light AA guns, and by D + 6 there was such a congestion that two antiaircraft regiments were formed into an infantry brigade and held in reserve for a counterattack role. After the arrival of the fourth followup echelon, the antiaircraft defense strength was complete and provided for normal port and airfield defense.

Preparations for the Normandy landings were carried out under the protection of the air defense of Great Britain organization. Serious concern was given to the defense of beach areas, and antiaircraft artillery was to comprise 23 percent of the artillery landed on D-day, increasing to 42 percent on D + 1. Day fighters were to have virtual freedom of operation, with antiaircraft fire being restricted to 3,000 feet. At night, heavy concentrations of antiaircraft were necessary due to the small number of friendly night fighters available. Two antiaircraft brigades were allotted to defend the artificial harbor at Arromanches plus some 23,000 yards of beach areas. By the end of D-day a total of seventeen 40-mm and eight 20-mm automatic weapons had been landed. By D + 1 the first antiaircraft gun regiment landed, and an operations room was established. By 17 June two brigades with 96 AA guns, 132 40-mm and sixteen 20-mm automatic weapons, 24 searchlights, 76 balloons, and 62 smoke generators defended the artificial harbor, beaches, maintenance area, and the small port of Port en Bassin. A third brigade, with three antiaircraft gun regiments and three automatic weapons regiments, defended the 10 RAF airfields.

SHAEF had laid down in advance the general rules for antiaircraft artillery fire and had provided for three different types of areas: inner artillery zones (IAZ) in which antiaircraft engaged all targets except those identified as friendly, gun-defended areas in which freedom of action alternated between guns and fighters, and unrestricted areas in which fighters had absolute freedom and guns could fire only on aircraft definitely recognized as hostile. All assault beaches were designated IAZ's with a height limit of 16,000 feet until the local air force commander was in a position to exercise normal control.

After the breakout from the beachhead, and during the pursuit, a series of IAZ's were established from Arromanches to Paris and later from Paris to Antwerp. Experience indicated these IAZ's seriously interfered with Allied bombers, particularly British night bombers, en route to Germany, and, ultimately, air corridors were established to provide safe passage for friendly bombers.

With the advent of the V-1 and V-2 attacks on Antwerp and Brussels, the defenses were organized, using experience gained in the United Kingdom, and were formed as purely gun defenses with Antwerp an American responsibility and Brussels assigned to the British. Safe corridors for friendly aircraft were established and were marked at night by searchlight marker beacons. By the end of November a series of antiaircraft belts were established by the British across the main lines of approach of the missiles by employing 130 heavy AA guns

and 72 searchlights. The effectiveness of this defense continued to improve until, by the last week in March 1945, a 97-percent kill effectiveness was achieved.

The final major attack in Western Europe occurred on 1 January 1945 when some 850 German aircraft launched attacks against eight airfields behind British and American lines. Many aircraft failed to find their targets, and seven additional airfields were attacked, either by mistake or as secondary targets.

In India and Burma, the British antiaircraft defenses differed from those at home or in Europe. The large distances which separated vital areas in India complicated the planning for defense. Little flexibility was possible because moves of units took days, if not weeks. Early warning radars were not effective, and observation posts were almost nonexistent. The major problem in the jungle was the hedgehopper, and the best solution was found to be the 40-mm automatic weapon mounted on a tower 60 feet or more in height. Air activity in Burma was too light to test seriously the antiaircraft defenses there.

SAM-D Missile Passes Final Test

The Army's SAM-D missile program has successfully passed a major milestone.

Successful flights of the last three SAM-D missiles flown mark the completion of the missile flight test portion of the advanced development phase, and SAM-D is moving on the way toward a full-fledged operational air defense system.

During this phase of the program 10 test missiles were launched, eight of which were successful.

The first two test missiles were launched in November and December 1969. Both were full-scale vehicles with short-burn motors fired to check out the canister launch technique. The next three missiles were flown at White Sands Missile Range in May and June 1970. These were propulsion test vehicles (PTV), flown to test the supersonic missile's rocket motor, structure, heat-shield materials, and radome in a high thermal and dynamic pressure environment and to verify the aerodynamic model of the missile in a nonmaneuvering environment.

Several accomplishments in the program to date have been singled out by H. Clay Johnson, program director, as key factors in the overall development.

Advanced simulation techniques—where missiles are "flown" on computers—showed outstanding results when compared to actual flight test data. In other words, the systems performed just as the computer said they would, indicating a high degree of reliability in simulations developed and applied by SAM-D analysts.

The control actuation system (CAS), which translates guidance commands to the missile's control fins to control its flight direction, operated reliably and according to design specification throughout the flight test program.

A unique spray-on heat shield, used for the first time on SAM-D, also proved itself in flight tests. Traveling at supersonic speeds, the missile generates considerable heat through air friction and the heat shield protects its internal components from extreme temperatures.

All the test missiles were launched from the dual-purpose canisters to further prove the practicality of this technique. Launch rails, covered with low-friction Nylatron, are built into the canister to guide the missile out of the tube as it begins its flight. The rails also provide support for the missile during shipping and handling.

Completion of the $33.5 million advanced development program lays the groundwork for the next phase—engineering development—which was scheduled to begin in late 1971. This next phase in the program will be the final step in developing the missile system to the point where it is ready to go into production and become part of the Army defense forces.

SAM-D, when deployed, will replace elements of the Nike Hercules and Hawk systems to provide continental United States and battlefield defense.

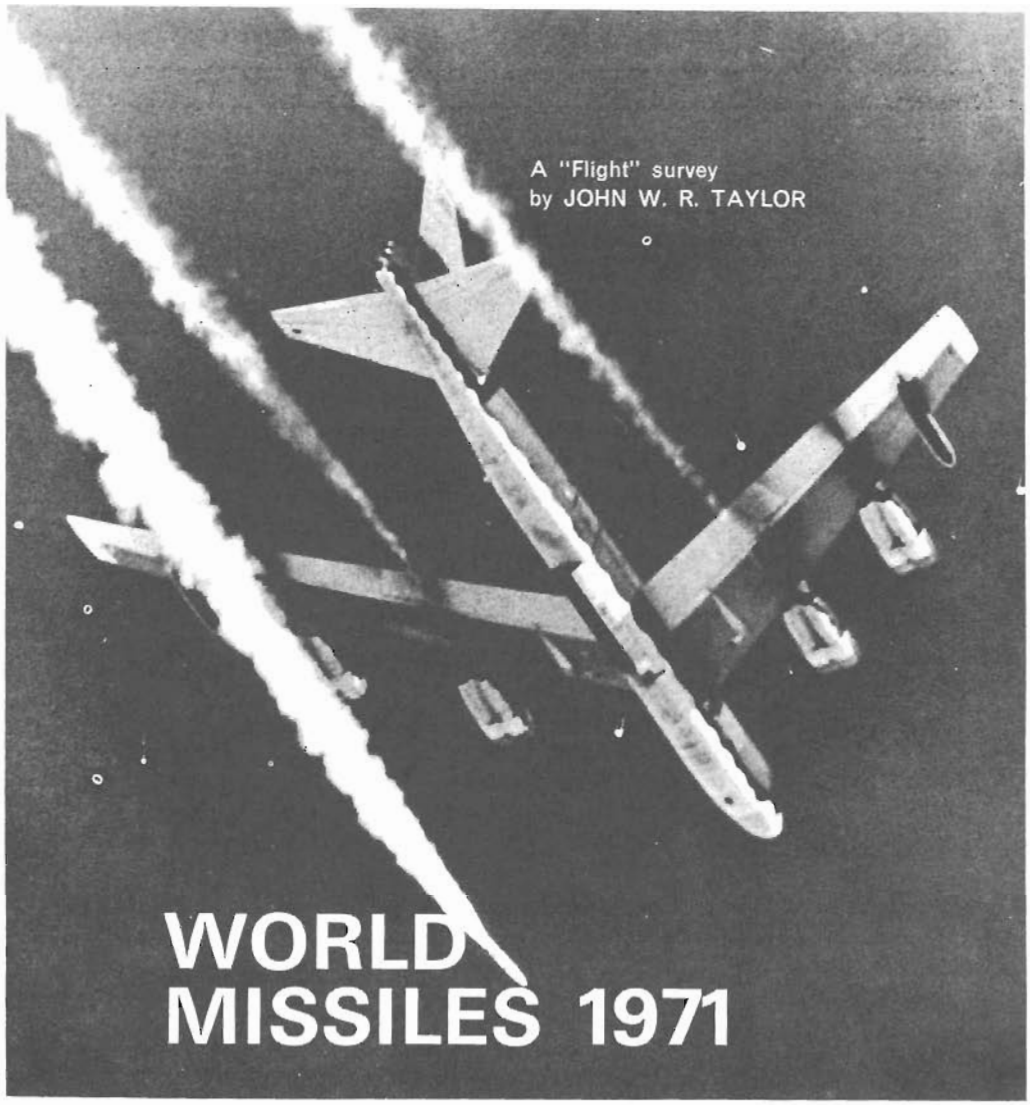

SRAM launched from the weapons bay of a B-52H Stratofortress during trials

Reprinted with permission of Flight International.

1 — Strategic

CHINA

MRBM/ICBM The fourth Chinese nuclear test, in October 1966, involved delivery of the warhead to the target area by a missile, probably based on an early type of Soviet MRBM (medium-range ballistic missile). US Defense Secretary Melvin R. Laird said in February 1970 that China was expected to deploy MRBMs operationally "at any time" and to have 80-100 such missiles available by the mid-1970s. First test firings of an ICBM are believed imminent, over a 4,000-mile range aimed towards Zanzibar where Chinese technicians have installed monitoring equipment. Initial operational capability of the ICBM force is expected in 1973-75, with 10-25 missiles at readiness two or three years later. Even without penetration aids, 25 missiles with 3-megaton warheads and 40 per cent reliability might cause 11-12 million fatalities in the USA in the absence of an ABM defence system, according to Mr Laird. A solid-propellant ICBM is believed to be under development to supersede the first-generation liquid-propellant missile, which will have an estimated maximum range of 6,000 miles.

FRANCE

MSBS This Polaris-type two-stage solid-propellant intermediate-range missile is scheduled to become operational on the nuclear-powered submarine *le Redoutable* during 1971. Two similar vessels, *le Terrible* and *le Foudroyant*, will follow in 1972-75; construction of *l'Indomptable* will begin in 1976-77, by which time a fifth submarine might also have been authorised. Each is designed to carry 16 missiles in line with American and British philosophy.

Aérospatiale's Division Systèmes Balistiques et Espace, which absorbed the former SEREB company, has overall technical responsibility for the MSBS programme, including the launch sub-system in the submarines. Launches of M-013 prototype missiles from the conventionally-powered experimental submarine *Gymnote* have been made successfully. The operational SNLE missile submarines will each be capable of firing a full salvo of 16 missiles in 15min. Initially the MSBS has a nuclear warhead of about 500 kiloton yield; this is expected to be replaced with a thermonuclear warhead by 1975, and the reduction in yield (from 2·6 to one megaton) of devices tested at Mururoa in the Pacific last summer indicates that the necessary miniaturisation of French thermonuclear warheads is being achieved.

At this moment the oceans of the world conceal dozens of high-speed, deep-diving, nuclear-powered submarines armed with thermonuclear missiles which could eliminate most of the world's great cities speedily and with little warning. At six vast areas in the USA, in the Soviet Union and on the Plateau d'Albion in France, other missiles, numbered in thousands, are poised to counter an offensive that everyone hopes and prays will never be launched.

Statesmen from the USA and Russia, whose armed services control a high proportion of the currently available long-range missiles, have begun strategic arms limitation talks (SALT). They can hardly expect to make any significant progress towards a complete ban on such weapons, as the deterrent policy of "peace through fear," deplorable though it might be, has kept the world free of global war for a quarter of a century. The best for which they can strive is to maintain the credibility of the deterrent by limiting the deployment of anti-ballistic missile systems that neither can afford and which would offer scant personal protection to the mass of their peoples.

On the day that this article is being written has come news that makes the whole picture a little more worrying. US Secretary of Defence Melvin Laird, in his annual report to Congress, has said that China might well have tested its first ICBM late last year. Officials added later that it seems to have been an unarmed missile, which travelled only 2,000 miles—the range having been restricted to confine the test within China's own borders.

Mr Laird believes that the earliest possible date for Chinese ICBM operational readiness would be 1973, and that it will probably be later in the decade before significant numbers of missiles can be emplaced. Meanwhile Russia, too, appears to be on the point of putting new ICBMs into service. Pentagon officials followed up the Secretary's speech by confirming that intelligence operations over the Soviet Union (presumably by satellite) have revealed new silos and equipment, unlike anything seen before, which strengthen the speculation that an entirely new missile rivalling the huge SS-9 is in existence.

Nor is this all, for US reports claimed some months ago that China had three operational intermediate-range missile sites in Tibet—once the "Shangri-la" dreamland of infinite peace. Two more sites were reported to be under construction, more than 15,000ft above sea level, to take missiles with a range exceeding 1,000 statute miles and probably with nuclear warheads.

These indications of "progress" in strategic missilery are matched by equally spectacular developments in tactical weapons. The last *Flight* survey of missiles was published in November 1968, only one year after the Israeli destroyer *Eilat* had been sunk by Styx missiles launched from Egyptian fast patrol boats. Since then a whole new generation of anti-shipping missiles has been evolved, aimed at sinking enemy vessels before they can launch weapons like Styx. Typical is the French Exocet, which can approach its target only a few metres above the sea after travelling up to 20 n.m. Surely this is a weapon to chill the heart of even the stoutest sea captain, and it is no coincidence that the Royal Navy has hastened to order Exocet rather than wait for a marinised, surface-to-surface version of Martel. Meanwhile Israel is arming itself with the comparable Gabriel and the Germans are pressing ahead as fast as possible with the air-launched Kormoran.

Israel may well be the next nuclear power soon, as there have been persistent reports that her armed forces plan to equip with ballistic missiles bearing nuclear warheads from the Dimona reactor centre. India, too, is getting into the missile business. Bharat Dynamics near Hyderabad has been formed, to produce initially the SS.11 anti-tank missile under licence, following suggestions that Pakistan is manufacturing the MBB Cobra. Later, Bharat is expected to add the AS.30 and other missiles to its product line.

So, as the aircraft industry shrinks throughout the Western world, the missile business continues to grow. With Russia developing weapons like the FOBS "space bomb" and America's Safeguard ABM system proving that it can intercept incoming warheads above the atmosphere, the future promises to be interesting if not very reassuring.

SSBS Development testing of the silo-based SSBS (sol-sol balistique stratégique) medium-range two-stage solid-propellant missile was completed on June 24, 1969, when an S-02 prototype was launched towards the Azores from a silo at the Landes test centre. The 1,550-mile flight was entirely satisfactory, and the 1er Groupement de Missiles Stratégiques (GMS) will become operational this year on the plateau d'Albion in Haute-Province. For bugetary reasons there will now be only two fire-control centres, each with nine silos, instead of the three originally planned. The centres (PCT1 and PCT2) are at Rustrel (Vaucluse) and Reilhannette (Drôme); both should be operational by early 1972. Like the MSBS, the SSBS is fitted initially with a nuclear warhead, of 150kT yield. This will be superseded eventually by a thermonuclear charge. The Division Systèmes Balistiques et Espace of Aérospatiale is prime contractor with overall responsibility for design and development of the entire weapon system.

GREAT BRITAIN

UK Polaris All four of the Royal Navy's Polaris submarines (HMS *Renown, Repulse, Resolution* and *Revenge*) are now operational, each with 16 Polaris A3 missiles. The technical and operational difficulty of ensuring that two of the submarines will always be on patrol at any given time is offset by their capability of launching missiles while at their Faslane (Clyde) base. However, the possibility of adding a fifth ship to the force, or of replacing the Polaris missiles with more effective Poseidons, continues to exist.

USA

LGM-30B Minuteman I Updating of the Minuteman force of 1,000 combat-ready ICBMs continues. None of the original LGM-30A missiles remains operational. Only the second wing at Ellsworth AFB, South Dakota, and the fifth wing at Warren AFB, Wyoming, are now fully equipped with LGM-30B Minuteman Is (total of 350). The third wing at Minot AFB, North Dakota, began re-equipping with Minuteman IIs in early 1970. Eventually all wings will have Minuteman II or III.

The silo launcher for Minuteman is approximately 80ft deep and 12ft in diameter, with two underground equipment rooms around the silo casing, some 28ft below ground level. Each flight of ten launchers is served by an underground launch control centre, in the form of a blast-resistant shock-mounted capsule manned by two USAF Strategic Air Command officers.

Surface area of each launch site is 2-3 acres. Wing I is deployed over a total area of 18,000 sq miles. The complete Minuteman force can be launched via EC-135 flying command post aircraft on permanent airborne alert, as an alternative to control from the underground centres.

LGM-30F Minuteman II This slightly larger version of Minuteman has a new second-stage nozzle and re-entry vehicle (see data table) and other changes. Increased range and azimuth provide greater targeting coverage. A more sophisticated guidance system can pre-store the locations of a larger number of alternative targets and is claimed to give an 800 per cent improvement in accuracy. Minuteman II first became operational with Wing VI at Grand Forks, Utah, in December 1966; has since replaced Minuteman I at Wing 1, Malmstrom AFB, Montana, and Wing IV, Whiteman AFB, Missouri; and began equipping Wing III at Minot early last year.

LGM-30G Minuteman III New second- and third-stage motors and an ogival fairing over multiple warheads distinguish this latest version of Minuteman. First of a now-completed series of 17 R&D launches was made with great success on August 16, 1968. Installation of the first Minuteman III squadron, with five launch control centres and 50 silos, was completed at Minot AFB on January 8 this year. All 510 missiles of this type currently authorised are scheduled to be emplaced by the end of the 1973 fiscal year, with multiple individually-targetable re-entry vehicles (MIRV).

UGM-27B Polaris A2 Operational since the summer of 1962, Polaris A2 equips 13 of the US Navy's 41 operational SSBNs (nuclear-powered ballistic-missile submarines), each of which carries 16 missiles. The US Navy claims that each SSBN has all of its missiles ready to fire 95 per cent of the time and 14 all of the time. The ships operate out of Holy Loch, Scotland; Rota, Spain; Charleston, South Carolina and Apra Harbor, Guam. Seven are normally deployed in the Pacific and the remainder in the Atlantic and Mediterranean theatres.

UGM-27C Polaris A3 With a bullet-shape nose-cone, new motors, control systems and guidance package, this longer-range Polaris is carried by 28 US Navy and four Royal Navy submarines. It has been operational since September 1964.

ZUGM-73A Poseidon C3 When Poseidon replaces Polaris on 31 of the US Navy's SSBNs, their effectiveness will be increased by 800 per cent. Despite the increased size of the new weapon, it can be housed in, and launched from, existing Polaris A3 launchers after slight modification of the tubes. Deployment will begin later this year (a few months later than planned) on the USS *James Madison*, which has been undergoing refit since 1969 with modifications to its launch-tubes aud installation of improved navigational and fire control systems. Poseidon is designed to carry multiple individually-targetable re-entry vehicles.

LGM-25C Titan II Sole survivors of the original USAF liquid-propellant ICBM force are approximately 54 Titan IIs, with storable motors, in silos at Davis-Monthan AFB, Arizona; McConnell AFB, Kansas and Little Rock AFB, Arkansas. Fitted with the largest thermonuclear warheads of any US missiles, including advanced penetration aids, they are likely to be phased out of service slowly in the 'seventies.

ULMS The US Navy's projected Undersea Long-range Missile System (ULMS) is intended as a follow-on to Polaris-Poseidon. Extended range (over 5,750 miles) would permit operation from relatively short-range submarines cruising along the continental shelf, where they would be difficult to locate by sonar. R&D funding has increased from $10 million in FY 1970 to $44 million in FY 1971 and a requested $100-plus million in FY 1972. Production financing is planned to begin in FY 1975.

USSR

Note: All missiles listed in this and subsequent USSR sections are identified by the recognised Nato code-names.

Sandal This is the liquid-propellent MRBM that was deployed briefly in Cuba in 1962, one year after it was first included in a military parade through Moscow. Evolved from the earlier Shyster, it is a single-stage weapon, almost certainly based on German V2 technology. Estimated range is 1,100 miles, with alternative nuclear or high-explosive warheads. A total of about 700 Sandals and Skeans is believed to be in service, of which 70 are directed at targets in China and Japan, and the remainder at western Europe.

Savage (SS-13) Soviet counterpart of Minuteman, this three-stage solid-propellant ICBM is replacing the storable liquid-propellant SS-11. The stages each have four nozzles and are separated by truss structures. Depending on the efficiency of the propellent, range could be anything up to 5,000 miles with a one-megaton thermonuclear warhead. About 100 are operational.

Sawfly First seen in a Moscow military parade in November 1967, Sawfly is believed to be an R&D version of the latest Soviet submarine-launched ballistic missile, with a range of at least 2,000 miles. Considerably larger than the US Navy's Poseidon, it appears to be a two-stage solid-propellant missile with a length of about 42ft and diameter of 5ft 9in; but the nose-cone shown on the display rounds is unlikely to be representative of the operational type. The first-stage motor has four nozzles.

Scamp/Scapegoat The IRBM known to Nato as Scapegoat appears to consist of the top two stages of the SS-13 Savage ICBM. Its estimated range is 2,500 miles and it is an extremely mobile weapon, being carried on a tracked erector/launch vehicle known as Scamp. The missile is housed inside a hinged container which is raised to a vertical position, opened up and moved aside before Scapegoat is launched. First shown publicly in May 1965, this weapon system has since undergone considerable refinement and is now deployed on the Chinese border, in Outer Mongolia, as well is in Europe.

Scarp (SS-9/FOBS) This mighty liquid-propellant ICBM was first shown in the Moscow military parade to mark the 50th anniversary of the October Revolution. Few details are

TABLE 1: STRATEGIC MISSILES

Designation (see notes)	User	Prime contractor	Dimensions		Launch wt(lb)	Max range (n.m.)
			Length	Max diam		
MSBS	France	Aérospatiale	34ft 1½in	4ft 11in	39,683	n.r.
SSBS	France	Aérospatiale	48ft 6½in	4ft 11in	70,327	1,620 ÷
LGM-30B Minuteman I	USAF	The Boeing Co, Aerospace Group	55ft 11in	6ft	65,000	5,470
LGM-30F Minuteman II	USAF	The Boeing Co, Aerospace Group	59ft 10in	6ft	70,000	6,080 +
LGM-30G Minuteman III	USAF	The Boeing Co, Aerospace Group	59ft 10in	6ft	76,000	6,950 +
UGM-27B Polaris A2	USN	Lockheed Missiles & Space Co	31ft	54in	30,000	1,500
UGM-27C Polaris A3	USN, RN	Lockheed Missiles & Space Co	31ft	54in	30,000	2,500
ZUGM-73A Poseidon C3	USN	Lockheed Missiles & Space Co	34ft	6ft 2in	65,000	2,500
LGM-25C Titan II	USAF	Martin Co et Denver	103ft	120in	330,000	6,300

Notes: LGM, silo launched; UGM, underwater launch; AP, ammonium perchlorate; PBAA polybutadiene acrylic acid; Nc, nitrocellulose; Ng, nitroglycerine; Fl, fluid injection; PU, polyurethane; n.r., not releasable.

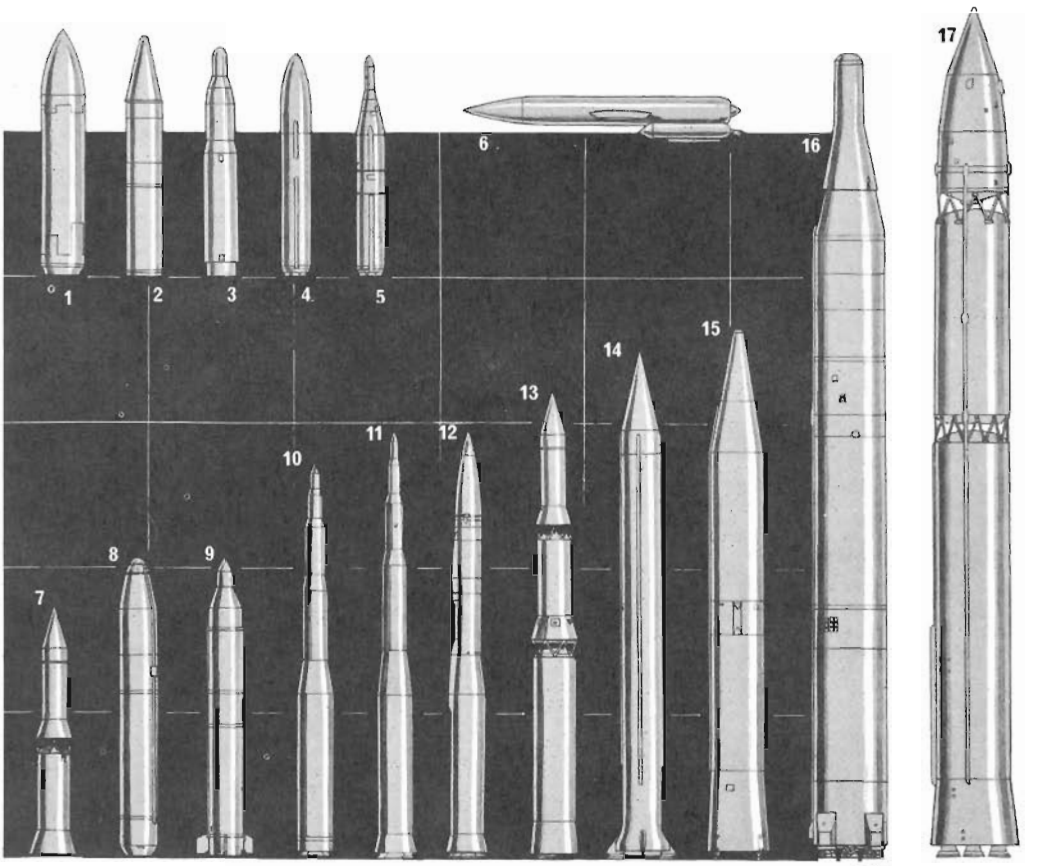

© Flight International 1971

discernible, except that the first stage has six main nozzles and four vernier nozzles faired into the surrounding skirt. However, Scarp appears to be employed as the vehicle for at least three different types of warhead. The basic SS-9 ICBM can launch either a single 20/25-megaton thermonuclear warhead or three separate re-entry vehicles, each of an estimated five megatons yield. An inert multiple re-entry vehicle (MRV) delivered 5,600 miles over the Pacific by an SS-9, in 1969, and photographed by a US special reconnaissance aircraft, ejected three separate warheads with

Strategic missiles **1**, Poseidon; **2**, MSBS; **3**, Serb; **4**, Polaris A3; **5**, Polaris A2; **6**, Shaddock; **7**, Scapegoat; **8**, Sawfly; **9**, SSBS; **10**, Minuteman 30B; **11**, Minuteman 30F; **12**, Minuteman 30G; **13**, Savage; **14**, Sandal; **15**, Skean; **16**, Scarp; **17**, Scrag. The background grid is divided into 20ft squares

continued overleaf

Propulsion	Airframe	Guidance	Control	Usual re-entry vehicle
Two stages: PNSM P.10 (Type 904); PNSM P.4 (Rita) solid-propellant	1, Vascojet 1000; 2 glass-fibre	Inertial	1, four gimbal nozzles; 2, one nozzle, thrust vectoring	Nuclear
Two-stages: PNSM P.16 (Norma 902); PNSM P.10 (Norma 903) solid-propellant	1, maraging steel; 2, Vascojet 1000	Inertial	Four gimbal nozzles each stage	Nuclear
Three stages: 200,000lb Thiokol M-55 AP/PBAA; 2, Aerojet-General PU/AP; 3, Hercules Nc/Ng/AP	1, UHT steel; 2, titanium; 3, glass	Autonetics inertial with micromodules	Four gimbal nozzles each stage	—
Three stages: same contractors, change in mix	1, UHT steel; 2 and 3 n.r.	do	do, except stage 2, 1 nozzle + FI n.r.	Avco Mk II, 1 + MT GE Mk 12, 2 + MT
Three stages: 1, Thiokol M-55E; 2 and 3 Aerojet-General	1, UHT steel; 2 and 3 n.r.	do	do	do, MIRV with penetration aids
Two stages: 1, 80,000lb Aerojet-General PU/AP; 2, Aerojet-General PU/AP	1, UHT steel, 2, glass	MIT inertial Mk 1, GE - Hughes	First stage four jetevators, stage 2, four gimbal	Lockheed, 0.5MT
As above except second-stage; Hercules Nc/Ng/AP	1 & 2 glass-wound	MIT inertial Mk 2, GE - Hughes	1, four rotate nozzles; 2, 4 + FI	Lockheed
Two stages: 1 Thiokol and Hercules; 2, Hercules; solid	n.r.	MIT inertial, Raytheon, GE	One gimbal nozzle on each stage	n.r.
Two stages: 1, Aerojet-General YLR87-AJ-5, twin, 215,000lb; 2, Aerojet YLR-AJ-5, 100,000lb, both N_2O_4/Aerozine	Both aluminium	AC Electronics Divn, General Motors Corp/IBM, Inertial	Gimbal engines	GE Mk 6, nuclear

about the same dispersal "footprint" as a typical cluster of Minuteman silos. US intelligence sources have identified a range of possible future Soviet ICBM re-entry vehicles on launchers. In consequence, it is estimated that an MRV could be operational already, with an independently targeted version (MIRV) following at any time between late 1970 and 1972.

Third Scarp payload is the FOBS (fractional orbital bombardment system) "space bomb," which is put into a 100-mile low orbit around the Earth and slowed by retro-rocket to impact on target during its first orbit. Development of FOBS payloads, via Cosmos satellite launchings, has been under way since January 1967. Advantages of the technique are that attacks on US targets could be made from the south, with a much-reduced early warning period.

According to US Department of Defence estimates, more than 275 of the 1,060 Soviet ICBMs deployed on September 1, 1969, were SS-9s, with further launch sites under construction.

Scrag Although a regular participant in Moscow parades since 1965, there is no evidence to suggest that this three-stage liquid-propellant ICBM has ever been operational. Related closely to the core stages of the Vostok launch vehicle, it has a potential range of about 5,000 miles.

Scrooge This mobile strategic missile system uses the same tracked erector/launch vehicle as the latest Scamp/Scapegoat, but the 62ft-long tubular container appears to be used as launch tube for the missile. It is raised to a vertical position for firing and is not hinged to open up like the Scamp container. No details of the missile are known. Its range is estimated at 3,500 miles and Scrooge weapon systems have been reported near Buir Nor in Outer Mongolia, close to the Chinese frontier.

Serb Between September 1968 and September 1969 the US Defence Department estimated that the number of ballistic missiles carried by Soviet submarines increased from 45 to 110. Several nuclear-powered "Y" class submarines were operational by that time, each capable of carrying 16 ballistic missiles, and the number of these vessels is expected to increase to 35-50 by 1974-75. Serb is thought to be an R&D version of the first-generation Polaris-type missile carried by Soviet submarines for underwater launching. Prior to introduction of the "Y" class, such ships usually had from two to eight vertical launch-tubes. Typical was the "G" class, with three tubes, of which one is operational with the Chinese Navy.

Serb appears to be a two-stage solid-propellant missile, some 33ft long, and has an estimated range of 380 miles.

Shaddock This formidable cruise missile has a length of about 40ft and is believed to have a range of approximately 230 miles at Mach 0·95, or faster. It has been only glimpsed inside a tanker-like container during Moscow parades, but appears to be turbojet- (or possibly ramjet-) powered, with two jettisonable boosters. More than 60 submarines, half of them nuclear powered, are equipped to carry Shaddock, with anything from two to eight launch-tubes. In addition, destroyers of the *Kresta* class carry four and the *Kynda* class eight, the latter with reload capability for a second strike.

Skean With a length of 75ft and estimated range of 2,000 miles, this liquid-propellant intermediate-range ballistic missile can be regarded as an up-rated development of Sandal, its partner in the 700-strong Soviet IRBM/MRBM force. It has been shown inside silos in official films and differs from the earlier weapon in having no tail fins. It was first displayed publicly in 1964.

SS-11 Little is known about this liquid-propellent ICBM, except that about 670 were deployed in hardened, camouflaged silos in the Soviet Union at the beginning of last year. It is being superseded by the SS-13 Savage.

2 — Tactical

AUSTRALIA

Ikara This quick-reaction long-range anti-submarine weapon was conceived by the Australian Departments of the Navy and Supply, and is operational on destroyers of the RAN.

Tactical missiles (right) **1**, Malafon; **2**, Nord M20; **3**, Mace; **4**, Styx; **5**, SS.12; **6**, Matra Otomat; **7**, Samlet; **8**, Tigercat; **9**, Ikara; **10**, Gabriel; **11**, Penguin; **12**, Tern III; **13**, Nettuno; **14**, Little John; **15**, Exocet; **16**, Lance; **17**, Subroc; **18**, Pluton; **19**, Honest John; **20**, Frog 5; **21**, Scud; **22**, Frog 4; **23**, Pershing; **24**, Sergeant. The background grid is divided into 10ft squares

TABLE 2: TACTICAL MISSILES

Designation (see notes)	User	Prime contractor	Dimensions Length	Dimensions Max diam	Launch wt (lb)	Max range (n.m.)
Ikara	RAN, RN	Australian Department of Supply	11ft	5ft span	n.r.	n.r.
MM-38 Exocet	French, German, Greek and Royal Malaysian Navies, RN, Peru	Aérospatiale	16ft 9½in	13·5in	1,587	20
Malafon Mk 2	French Navy	Société Industrielle d'Aviation Latécoère	19ft 8in	9ft 10in span	2,865	10
Otomat	—	SA Engines Matra/Oto Melara	15ft 9½in	15·75in	1,325	32–54
SS.12	France, Netherlands, Libya, etc	Aérospatiale	6ft 2in	7·1in	167	3·2
Pluton	France	Aérospatiale	24ft 11in	24·6in	5,335	65
Gabriel	Israeli Navy	Israel Aircraft Industries	11ft	12·8in	882	11
Penguin	Norwegian Navy	Kongsberg Vaapenfabrikk	10ft	11in	727	10–15
Nettuno	Italian Navy	Sistel	12ft 3in	7·9in	370	5·4
Vulcano	—	Sistel	14ft 9in	7·9in	530	10+
Saab RB08A	Swedish Navy	Saab Aktiebolag	18ft 9in	26in	1,985	135
RUR-5A Asroc	USN, Japan	Honeywell, Ordnance Division	15ft	12in	1,000	5
MGR-1B Honest John	USA, NATO, Nationalist China	Douglas; Emerson Electric	24ft 9½in	30in	4,720	20
XMGM-52B Lance	USA	Vought Missiles and Space Co	20ft	22in	3,200	26
CGM-13B Mace	USAF	Martin Co. Baltimore Division	44ft 1in	54in	18,000	1,200+
MGM-31A Pershing	USA, Germany	Martin Marietta Corp	34ft 6in	40in	10,000	400
MGM-29A Sergeant	USA, Germany	Univac Salt Lake City (Sperry Rand Corp)	34ft 6in	31in	10,100	75
UUM-44A Subroc	USN	Goodyear Aerospace Corp	21ft	21in	4,000	26

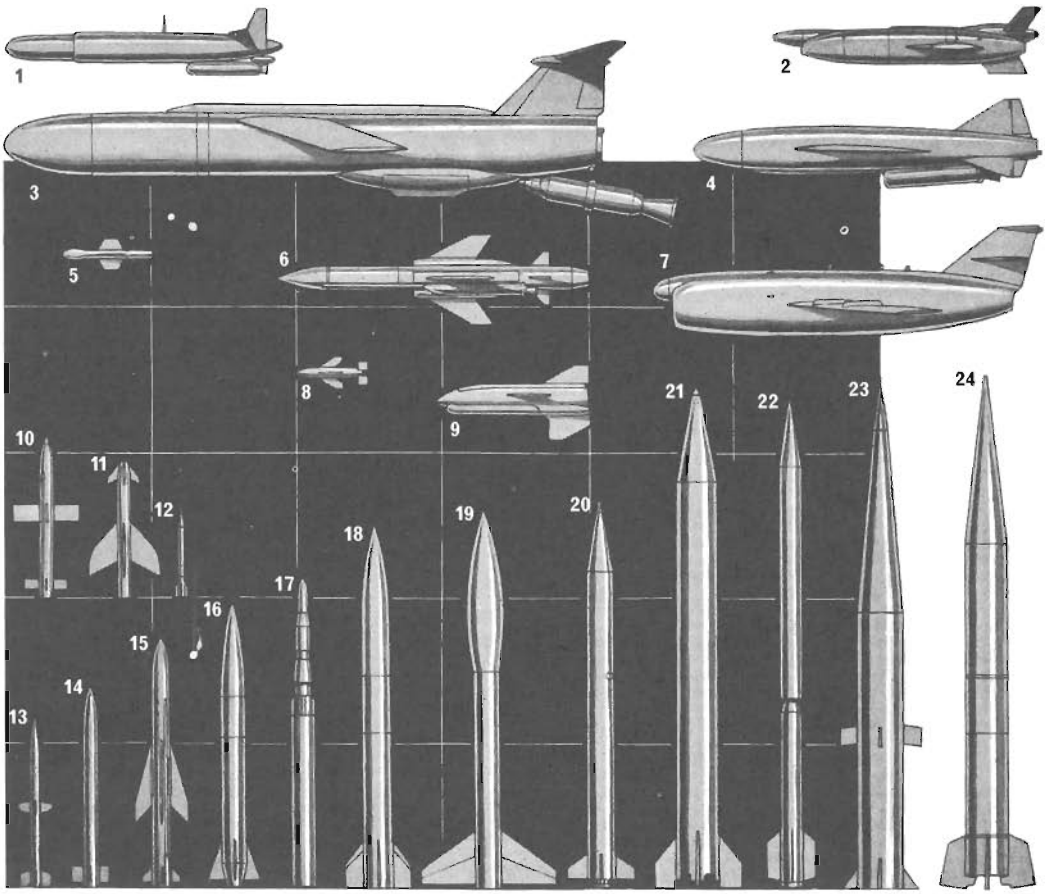

© Flight International 1971

Propulsion	Airframe	Guidance	Control	Warhead
Dual-thrust solid-propellant	n.r.	Radio/radar command: terminal homing	Elevons	Type 44 acoustic homing torpedo
Two-stage solid-propellant	n.r.	Inertial; terminal homing	Four moving fins	h.e., over 220lb
Two solid-propellant boosters only	n.r.	Command, with radio altimeter and terminal homing	Twist-and-steer	21in acoustic homing torpedo
Turbomeca type 281 turbojet + 2 launch rockets	n.r.	Inertial; terminal homing	Four moving fins	h.e., frag, incendiary, over 550lb
Solid-propellant motor, boost and sustainer charges	Steel sheet	Command through trailing wire Optional optical aiming-infra-red guidance	Jet-deflection	66lb h.e., shaped, a.p. or frag
SEP Styx dual-thrust solid-propellant	n.r.	Simplified inertial	Aerodynamic	Nuclear, 10kt–15kt
Rocket motor	n.r.	n.r.	n.r.	h.e., 330lb
Two-stage solid-propellant	n.r.	Inertial/infra-red terminal homing	n.r.	h.e., 264lb
4,410lb solid-propellant	Aluminium alloy	Beam-riding/radio command/radar altimeter	Four moving wings	h.e. frag
Two-stage solid-propellant	Aluminium alloy	Beam-riding/radio command/radar altimeter	Four moving wings	h.e., a.p.
880lb Turboméca Marboré 11D turbojet +2 launch rockets	Aluminium alloy	Initially stabilised; terminal homing	Aircraft type	h.e.
Naval Propellant Plant solid-propellant	n.r.	Sangamo Electric sonar	Free-flight	Acoustic homing torpedo or nuclear depth charge
Hercules M31A-1,762mm solid-propellant	Steel sheet	None; spin-stabilised by spin motors and fins	Free-flight	1,500lb nuclear or h.e.
Storable Rocketdyne liquid-propellant	n.r.	Systron-Donner Automet preset inertial	n.r.	Nuclear or h.e.
5,200lb Allison J33-41 turbojet + Thiokol launch rocket	Aluminium honeycomb	AC Spark Plug AChiever inertial	Aircraft type	Nuclear
Two stages: 1, Thiokol M-105 solid; 2, Thiokol M-106 solid	Steel sheet	Bendix (Eclipse-Pioneer) inertial	External fins, 1st stage jet deflection, 2nd stage air vanes	Nuclear
45,000lb Thiokol XM-100 solid-propellant	Steel sheet	Univac SLC inertial	Jet-deflection · elevators	Nuclear, h.e. or other
Thiokol TE-260G solid-propellant PU/AP	n.r.	General Precision inertial	Jet-deflection · fins	Nuclear depth bomb

Three *Perth*-class ships each carry two single launchers; six *River*-class each have one launcher. A modified version known as RN Ikara is being developed for the Royal Navy in Australia and the UK, where Hawker Siddeley Dynamics is "daughter company" for the project. HMS *Leander* began an extensive refit last summer that will include installation of an Ikara launching system produced by Vickers Ltd. Other *Leander*-class ships will follow and a single launcher is also carried by the new Type 82 guided-missile destroyer, HMS *Bristol*. The guidance system for RN Ikara utilises the Action Data Automation system first installed in HMS *Eagle*.

Ikara has a cropped-delta aeroplane configuration, with elevon control surfaces and upper and lower tail fins. About 11ft long, it is powered by a dual-thrust solid-propellant rocket motor and has an American Type 44 lightweight acoustic homing torpedo recessed into the bottom of its fuselage. After target location by ship or helicopter sonar, data are fed into a prediction system which calculates where Ikara must release its torpedo to give the best chance of a kill; the necessary signals are passed to the missile through the radio/radar guidance system. At the optimum point the ventral fin assembly is separated to release the torpedo, which is lowered into the water by parachute.

FRANCE

MM.38 Exocet This formidable long-range ship-to-ship missile is intended to provide an economical means of defence against weapons like the Soviet Styx, by attacking the launch vessels rather than attempting to intercept the missiles themselves after launch. Layout is conventional, with cruciform tail control surfaces indexed in line with mid-mounted wings, a tandem two-stage solid-propellent motor similar to that of Martel, and an Adac active homing warhead similar to that of a torpedo in destructive power. Exocet uses a modified version of the guidance system evolved for the German Kormoran, in conjunction with a TRT radio altimeter, to approach the target at high subsonic speed a few metres above the sea. It is an all-weather weapon, able to operate in an ECM environment.

Exocet's storage container serves also as launch-tube and can be installed on fixed or rotating mounts. The launch-ship must be fitted with surveillance and target-indicating radar, vertical reference plane gyro, log to indicate speed through the water, and fire-control system. The French Navy plans to deploy Exocet on its cruisers and on high-speed patrol boats which will each have four launchers on their aft deck. First export deliveries will be made to Greece, which has ordered a number of 40kt launch vessels from Chantiers de Cherbourg. Germany has ordered 20 similar ships, which will be built jointly by Constructions Mécaniques de Normandie and German shipyards. Other customers include Malaysia, the Royal Navy (which is expected to buy more than 300 missiles initially) and Peru, which will use Exocet in a coastal defence role. Firing trials from the ship *La Combattante 1* have been underway near the Ile du Levant since last July, initially without terminal guidance or warhead. British and German manufacturers will share in the manufacturing programmes of missiles ordered by their governments.

Malafon Mk 2 Development of this anti-submarine weapon began 15 years ago but it remains in production as primary A/S (anti-submarine) armament of the guided-missile frigates *Duquesne* and *Suffren* (each with single launcher, 13 missiles), the squadron escort destroyer *La Galissonnière*, five converted *Surcouf*-class destroyers, the frigate *Aconit* and three similar ships of the 67 Type now being built.

Malafon is ramp-launched with the aid of two jettisonable solid-propellant boosters, but is subsequently unpowered. It is maintained at a constant height of about 330ft above the water by a radio altimeter. This feeds data to the control system, which increases wing incidence progressively to maintain lift as the speed of the missile drops from a peak 515 m.p.h. The "twist and steer" control system is actuated by command guidance, using data from the ship's sonar. Half-a-mile from the predicted position of the target a tail parachute is streamed, causing the acoustic boming torpedo that is carried by the missile to be ejected by inertia.

Otomat Although similar in basic layout and purpose to Exocet, this newly projected weapon is powered by a Turboméca Type 281 turbojet which gives it a range of more than 32 n.m., and a potential of more than 60 n.m. with development. It is launched with the aid of two jettisonable booster rockets and is intended to fly to the target at a height of about 50ft above the sea. About 3·75 n.m. from the target, Otomat will climb prior to its final homing on to the objective in a high-speed dive. Its warhead (high-explosive, fragmentation or incendiary) will be detonated by a contact fuse.

Otomat is being developed jointly by Engins Matra and Oto Melara of Italy. By the beginning of this year, its estimated performance had been confirmed by calculation, simulation and testing of sub-systems, with initial firing trials about to start. Delivery of operational missiles is feasible by 1973.

Pluton In addition to its SSBS and MSBS strategic nuclear missiles, France intends to deploy this tactical nuclear missile in the 1970s as a replacement for Honest John. The 303rd Groupe d'Artillerie of the French Army will become operational with Pluton in 1972, as the first of five such units, each with eight launchers. Prime contractors are Aérospatiale for the missile and SEP for the Styx solid-propellant motor. Each Pluton is carried in a launch container on a modified AMX 30 tracked vehicle. A similar chassis is used for the computer vehicle by which the fire of each eight-missile Groupe is controlled. Missile guidance is by a simplified inertial system, based on a SAGEM inertial platform linked to a computer, and a range is variable from 5·4 to 65 n.m. Firing trials began in 1969 and since last summer have been made by missiles of definitive aerodynamic form, complete with guidance but without the nuclear warhead.

SS.12 Following the success of the SS.11 wire-guided spin-stabilised missile, Nord (now Aérospatiale) developed this scaled-up version with a much larger warhead which makes it effective against fortified positions as well as tanks. The SS.12M marine version equips three Libyan Navy fast patrol boats and there is an air-to-surface version (AS.12). All are available with TCA automatic guidance (see Harpon, page 392).

ISRAEL

Gabriel Operational on the French-built *Saar* class gunboats of the Israeli Navy since early 1970, this ship-to-ship weapon is the first guided missile of Israeli design and manufacture of which details have been released officially. It has been described as an automatic homing missile, using a sophisticated electronic guidance system and delivering a powerful high-explosive warhead accurately and reliably. It is delivered and mounted on board ship in a reinforced glass-fibre container which embodies the launch-rail and has a hydraulically actuated door-lid; no testing or adjustment are required after installation. Each *Saar*-class ship carries two three-round rotating launchers on its after deck and two single-round launchers to each side of a 40mm gun on the forward deck. Gabriel is subsonic and is reported to travel to the target only a few metres above the sea, like the French Exocet.

MD-660 There have been persistent reports that Israel is developing a strategic bombardment missile, able to carry nuclear warheads developed at the Dimona reactor centre near the Dead Sea. Other reports, three years ago, referred to firing trials off Toulon of a two-stage solid-propellant missile designated MD-660, fired from a mobile ramp over ranges up to 240 n.m., which Dassault were developing for Israel.

ITALY

Nettuno Known originally as Sea Killer Mk 1, this short-range surface-to-surface weapon is carried in a five-round multiple launcher on the Italian Navy's fast patrol boat *Saetta*. It has a single-stage solid-propellant motor and a beam riding/radio command guidance system, linked to a radar altimeter. Effective range is from 1·6 to 5·4 n.m. Development and evaluation of Nettuno, and other former Contraves Italiana missiles, are now handled by Sistel (Sistemi Elettronici SpA), formed jointly by Montecatini-Edison, Contraves Italiana, Fiat, Finmeccanica and SNIA.

Vulcano Originally Sea Killer Mk 2, Vulcano is a two-stage development of Nettuno, with heavier warhead and longer range. Testing began in mid-1969.

NORWAY

Penguin This Norwegian counterpart to Gabriel is in quantity production by Kongsberg Vaapenfabrikk, after being developed with assistance from the US and Federal German navies. It is delivered in a container with integral launch-rail and can utilise most existing types of shipboard fire-control

systems. Penguin uses an inertial guidance system, with infra-red terminal homing, and is said to have a warhead similar to that of Bullpup, for which Kongsberg Vaapenfabrikk was European prime contractor. Initial installations have been made on gunboats of the 20-strong *Storm* class, each of which can carry six individual launchers on the aft deck. The six new torpedo boats of the *Snogg* class are each expected to be fitted with four launchers; others will go on the five *Oslo*-class frigates, and the manufacturers offer variants for operation from land bases and helicopters.

SWEDEN

Saab RB08A Based on Aérospatiale's well-proven CT.20 target drone, this high-subsonic cruise missile was in production from 1965 to 1970 to equip Swedish coastal defence batteries and the destroyers *Halland* and *Smaland*. It carries a highly effective warhead of Swedish design; Aérospatiale give the weight of this as 550lb and the missile's maximum range as 135 n.m.

USA

RUR-5A Asroc This rocket-boosted anti-submarine ballistic weapon is able to deliver an acoustic homing torpedo or nuclear depth charge over a range of one to six miles. It can be fired from a special eight-round launcher or from standard shipboard Terrier SAM launchers, and is operational on eight Japanese destroyers as well as on cruisers, destroyers and escort vessels of the USN.

MGR-1B Honest John More than 20 years after its development started, this unguided, spin-stabilised artillery rocket, with optional nuclear warhead, remains in service with many Nato armies, including that of Britain. The US and French armies plan to replace it with Lance and Pluton respectively.

XMGM-52B Lance After more than eight years of development by LTV, it seems likely that production of this divisional support missile for the US Army will begin in 1971. Original Department of Defence requests for production funding were refused by the House of Representatives but restored by the Senate Appropriations Committee, which recommended the addition of $31·9 million, £14·5 million, to sums allocated earlier for R&D. Lance is powered by two concentrically mounted storable liquid-propellant engines, of which the outer one operates only during the high-thrust boost phase. The sustainer engine operates at a lower thrust when boost is terminated, giving the missile a selective range from 2·6 to 26 n.m., with a choice of nuclear or non-nuclear warhead. Six men are needed to operate Lance, which can be carried on a helicopter-transportable lightweight wheeled launcher or by two modified M-113-A1 tracked vehicles—one an erector-launcher, the other carrying two more missiles and a reloading hoist.

CGM-13B Mace This veteran nuclear-armed "flying bomb" continues to equip two 16-missile squadrons of PACAF on Okinawa and one USAFE squadron in Germany, in each case at hardened sites.

MGM-31A Pershing US Army units equipped with this selective-range ballistic missile system in Europe were uprated to Pershing 1-A standard in late 1969 and early 1970; Federal German units operating the weapon system are being similarly converted. There is no change to the missile itself, but mobility, reliability and rate of fire are improved by replacing the original tracked vehicles with four-wheeled vehicles based on the XM656 five-ton truck. These comprise an erector-launcher, carrying the missile and its nuclear warhead, a programmer/test station and power station vehicle, a firing battery control centre, and the radio terminal set vehicle, with inflatable antenna. Erection and laying at the launch-site are now automatic, and Pershing is able to provide both quick reaction alert (QRA) fire support for a theatre and general support for a field army.

MGM-29A Sergeant Univac Salt Lake City continue to provide support for this medium-range field artillery missile, which has been operational since 1962 with the US Army and Federal German forces. A new digital computer has been developed to provide faster count-down and rate of fire. By integrating the functions of several earlier items of ground equipment, it has also improved system mobility by eliminating one semi-trailer van and truck from each battery. Only one 2½-ton truck and three semi-trailers are now needed. They are air-transportable, and Sergeant can be emplaced and fired in a few minutes by a six-man crew.

UUM-44A Subroc Production of this unique long-range anti-submarine weapon continues under a further $22·5 million, £9·5 million, contract placed by the US Naval Ordnance Systems Command. Subroc has been operational since 1965 and is carried by the US Navy's high-speed nuclear attack submarines throughout the world. It is launched from the standard 21in torpedo tubes of a submerged submarine, which can be moving and need not be pointing towards the target. Propelled by its rocket motor, it leaves the water, follows a ballistic trajectory to the target and there separates its nuclear depth bomb warhead. A lightweight inertial guidance system steers the missile by means of jet-deflection nozzles during its passage through the water after launch and in boosted flight, and via aerodynamic fins after booster jettison. Re-entry into the water is at supersonic speed.

USSR

Frog-1 One of the first Soviet missiles displayed publicly, in 1957, this counterpart of Honest John is claimed to offer high precision and to carry "an enormously powerful thermo-nuclear warhead." It has an estimated length of 31ft, weight of 6,000lb and range of 13 n.m., and is fired from an elevating ribbed launch-tube on a JS3 amphibious AFV chassis. "Frog" is a Western name signifying "free rocket over ground."

Frogs 2, 3, 4 and 5 All Frogs are unguided solid-propellant tactical weapons. Like Scud-A, they are deployed widely throughout the armies of the Warsaw Pact nations, which implies the use of interchangeable nuclear and h.e. warheads. Frog-2 was single-stage, with a bulbous warhead. The two-stage Frogs 3, 4 and 5 are each estimated to be about 33ft 6in long, with a range of 26 n.m., and differ from each other mainly in shape and size of warhead. Slimmer than Frog-1, all four missiles are carried on tracked vehicles derived from the PT76 amphibious tank and are air-transportable in the An-22.

Frog-7 Like most of the latest Soviet tactical land-based missiles, Frog-7 is carried on a wheeled transporter-launcher. First seen in 1965, it reverts to a single-stage configuration. However, as in earlier Frogs, its main nozzle is surrounded by a ring of small ones.

Samlet Coastal defence units of the Red Banner Northern Fleet are among the operators of this surface-to-surface cruise missile, which has also been supplied to Poland and Cuba. Basically similar to the air-to-surface Kennel, it has a much smaller blister fairing on its tail-fin.

Scaleboard First displayed in November 1967, Scaleboard is carried on the same type of wheeled erector-launch vehicle as Scud-B and is similar in length (37ft). It appears to be larger in diameter, but has never been seen as it is housed and erected for firing inside a ribbed split casing which has been closed on all photographs. Its range is estimated at 390 n.m.

Scud Several hundred of these single-stage liquid-propellant missiles appear to be in service, almost certainly with some form of guidance and with choice of nuclear and h.e. warheads. Scud-A is about 35ft long, with an estimated range of 43 n.m. and is carried in an elevating cradle on the same type of tracked vehicle as Frog-1. The larger Scud-B, first seen in 1965, uses a wheeled transporter-launcher.

Strela Except that it is larger and more advanced than Styx, nothing is known of this aeroplane-type cruise missile. Each of the six destroyers of the *Krupny* class has two launchers, fore and aft; the four *Kildin* class have a single launcher, aft.

Styx By sinking the Israeli destroyer *Eilat* on October 21, 1967, this aeroplane-type cruise missile heralded a new era of warfare at sea. In particular, it inspired development of a new generation of missiles such as the French Exocet, for defence against it. Styx itself is quite crude and simple in design, with cropped-delta wings, ailerons, and control surfaces on each of the three "inverted-Y" stabilisers at the tail. It is rocket-powered and ramp-launched with the aid of jettisonable booster. Overall length is about 20ft, span 8ft 10in and range at least 13 n.m. About 150 *Osa* and *Komar* class fast patrol boats serve with the Soviet Navy, carrying four and two Styx respectively. At least nine other navies have ships of these classes, including that of Communist China. The missiles that sank the *Eilat* are believed to have been launched by *Osa*-class boats of the Egyptian Navy in harbour at Port Said; their accuracy suggests a radar-homing capability.

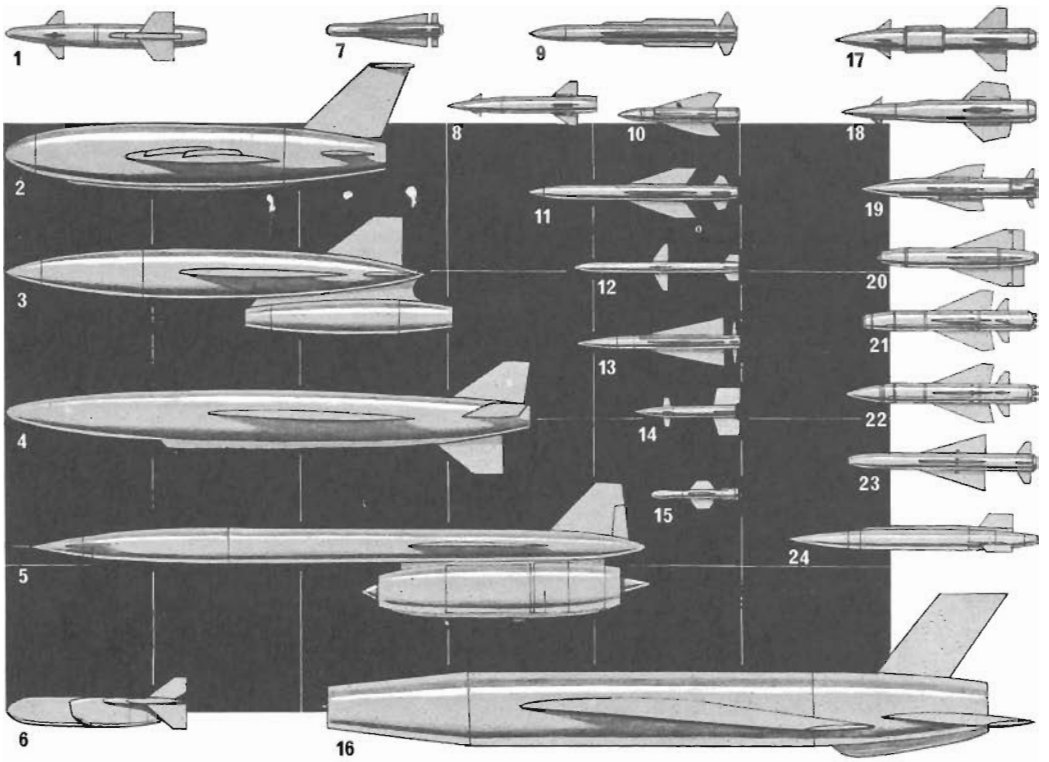

© Flight International, 1971

Air-surface **1**, Robot; **2**, Kelt; **3**, Kipper; **4**, Kitchen; **5**, Hound Dog; **6**, Quail; **7**, Maverick; **8**, Bullpup 12B; **9**, Standard Arm; **10**, AS.20; **11**, Kormoran; **12**, Shrike; **13**, Saab 305; **14**, Russian helicopter; **15**, AS.12; **16**, Kangaroo; **17**, Bullpup 12D; **18**, Bullpup 12C; **19**, AS.30; **20**, Walleye; **21**, Martel (TV); **22**, Martel (Radar); **23**, Condor; **24**, SRAM. Blue Steel, the British stand-off weapon, was included in the previous "Flight" missiles survey, November 14, 1968. The background grid is divided into 10ft squares

WORLD MISSILES . . .

3 — Air-to-surface

FRANCE

AS.11B.1 Generally similar to the SS.11 (page 392), this wire-guided air-to-surface missile is carried by many fixed-wing aircraft and helicopters, including the British Wessex and WG.13 Lynx.

AS.12 This air-to-surface version of the formidable SS.12 (page 380) is utilised primarily as an anti-submarine weapon on aircraft like the Alizé and Atlantic. It is an alternative to Martel on the wing pylons of the Nimrod, and the Lynx helicopter will carry four, in conjunction with an optical stabilised sight. The AS.12 was the first version of this missile adapted to TCA automatic guidance, as described for the Harpon anti-tank weapon, but most of those in service are steered manually.

AS.20 The air forces of five countries bought a total of more than 7,000 of these spin-stabilised missiles, for use both as primary weapons and for training pilots to use the larger AS.30 operationally. Minimum launch speed is Mach 0·7, and the AS.20 is normally carried by the Mirage III and Fiat G.91. Manual radio command guidance is standard, but the AS.20 can also utilise the TCA optical aiming/infra-red system.

AS.30 Scaled up from the AS.20, with added flip-out tail-fins and the same choice of guidance systems, this solid-propellant air-to-surface weapon is in standard service with the French, German, Swiss, Israeli and South African air forces, the French Navy and the RAF, which bought AS.30s to arm its Canberras. Deliveries have totalled about 5,500, including a version with TCA guidance supplied to the French air force. Minimum launch speed is Mach 0·45, with no restriction on firing at supersonic speeds. Experience has shown that the AS.30 exceeds the specification to which it was designed and which called for a circular error probability of less than 33ft at a range of 5·4 n.m., without the launch aircraft needing to approach within 1·6 n.m. of the target.

AS.30L With span reduced by 4in and launch weight of 836lb, this lightweight variant of the AS.30 was intended for aircraft in the G.91 class. It has a 253lb warhead.

AS.37 See Martel in the British section.

GERMANY

Kormoran Financed by the Federal German Government, Kormoran began as a joint project by MBB and Nord-Aviation of France, by whom it was designated AS.34. MBB have continued development with the aim of perfecting an anti-shipping weapon to be carried by the German Navy's F-104G Starfighters. These meet the missile system requirements of a Mach 0·5 minimum launch speed and availability of a navigation system that can establish precisely the launch position of the aircraft. Kormoran's guidance system enables it to approach the target at a height of only a few metres above the water, with terminal homing. The missile is 14ft 5in long, with a weight of 1,320lb.

GREAT BRITAIN

Blue Steel Only No 27 and 617 Squadrons of RAF Strike Command, at Scampton, continue to fly Mk 2 Vulcans equipped with Blue Steel. They are trained primarily for attack at low level.

Martel Launch trials of both versions of the Anglo-French Martel (Missile Anti-Radar and TELevision) have gone well and production has started to arm Buccaneer and Nimrod aircraft of the British services and Mirage III-E, Jaguar and Atlantic aircraft of the French Air Force and Navy. The TV-guided version (AJ.168) follows a pre-programmed course

immediately after launch, but is controlled subsequently by an operator in the launch aircraft. Its Marconi TV camera transmits a direct visual picture of the approaching target to a high-brightness monitor in the cockpit, and the operator uses this as a reference by which to steer the missile. He can continue to do so after the launch aircraft has turned for home and it need never approach within "tens of miles" of the target. The AJ.168 is designed to operate in an ECM environment, as is the AS.37 version which homes automatically on to enemy surface radars and is therefore an all-weather weapon.

SWEDEN

Robot RB04 Twelve years after it first entered service as standard armament on the A 32A Lansens of four SwAF attack wings, this all-weather anti-shipping missile is undergoing further development by Saab-Scania. The new version, designated RB04E, will have modified structure and guidance to improve its reliability and accuracy. Three will be carried by the AJ 37 Viggen attack aircraft as the most important of its various alternative weapon loads. Meanwhile, the RB04C has been superseded by the RB04D, with higher performance, on the Lansen. All versions are similar in dimensions and configuration, with a high efficiency homing system, a warhead equivalent to half their launch weight and a high subsonic cruising speed.

Robot RB05A In November 1970 Saab-Scania announced the award of Skr180 million (£14·5 million) quantity production orders for this supersonic line-of-sight weapon, which is designed primarily for use against land and sea targets but has an air-to-air capability. The initial version lacks the all-weather characteristics of the RB04, being manually guided, but a homing version may be developed later. The RB05A is sufficiently manœuvrable and its guidance system precise enough for attacks on targets located at a considerable distance to each side of the launch-aircraft's course. It is one of the main alternative weapons for the AJ 37 Viggen and may also be used on the SwAF SK60B and SK60C versions of the Saab-105 lightweight attack aircraft.

USA

Bulldog Under a $1.9 million contract from the US Navy, Texas Instruments are developing guidance and control packages to adapt the Bullpup missile into a laser-guided weapon. Known as Bulldog, the new weapon will be fitted with an electro-optical seeker which will home on laser energy reflected from a target which is illuminated by a laser device.

AGM-12 Bullpup After massive production in the USA and Europe, at least four versions of this combat-proven missile are operational with the US services and Nato air forces, including the RAF and RN. All are manually guided along a line-of-sight by keeping tracking flares on the missile aligned on the target. The USAF's AGM-12D can have a nuclear warhead, and Martin Marietta is reported to be producing the AGM-12E with a new high-fragmentation warhead.

AGM-53A Condor Development of America's counterpart to the TV-guided version of Martel has been hampered by power plant problems. The round used for the first air launching test from a Phantom, on March 31, 1970, had a Rocketdyne solid-propellant motor instead of the originally specified storable liquid engine. Since then an R&D Condor, complete with data link and guidance system, has scored a direct hit on the target in the first full-system test, after launch from an A-6A Intruder. Designed range with a large h.e. warhead is said to be 35 n.m., but one Condor is said to have hit a target 50 n.m. from its launch aircraft.

HARM Soviet-built surface-to-air missile radars in North Vietnam have been able to detect current types of US anti-radiation missiles homing on them and have sometimes ceased operation in time to avoid destruction. To counter this, the US Naval Weapons Centre, China Lake, is reported to be developing a High-velocity Anti-Radiation Missile (HARM) which would reach the target too quickly for such tactics to be effective.

AGM-28B Hound Dog Like Blue Steel, this thermonuclear cruise missile can no longer be regarded as a primary strategic weapon. Several hundred remain available to SAC's B-52G/H squadrons.

AGM-65A Maverick Unlike other US TV-guided missiles, Maverick is self-homing. The pilot simply selects his target on a high-brightness monitor, locks the missile guidance on to it and fires the round. Development is proceeding under a $95 million three-year fixed-price incentive contract received by Hughes from the USAF in July 1968. On December 18, 1969, first guided test flight of an unarmed round, launched from an F-4D Phantom in a dive attack over medium range, achieved a direct hit on an M-41 tank. If the USAF takes up its option for production of up to 17,000 missiles, Maverick will be carried in three-round clusters by the F-4 and A-7 for attacks on pinpoint targets.

ADM-20C Quail A clutch of two Quail ECM decoys, with their wings folded, can be packed into the bomb-bay of a B-52. When released, each spreads its wings and flies a predetermined pattern in enemy airspace, saturating the defences by producing a radar response identical with that of its huge "mother-plane." Production ended many years ago.

SCAD Planned as a successor to Quail for the B-52, and probably for the B-1A in due course, SCAD is a subsonic cruise armed decoy that would be able to carry a nuclear warhead as well as confuse the defences. With only design studies completed to date, the USAF requested $33·6 million for R&D in FY1971, but this was refused. SCAD is turbojet-powered, with a design range of up to 850 n.m.

AGM-45A Shrike This pioneer air-launched anti-radiation missile will home on an enemy ground radar over a range of about 8·5 n.m. It entered service with US Navy attack squadrons in 1964 and has been operational with both the USN and USAF in Vietnam since 1966. Many improvements have increased the effectiveness of Shrike since then, and there are persistent reports that missiles of this type supplied to Israel have new seeker heads designed to knock out the radars used at Soviet SA-2 and SA-3 missile sites.

AGM-69A SRAM On January 12 the USAF ordered full production of this highly important short-range attack missile, for which Boeing was named prime contractor in October 1966. Development had gone well in 1970, with 26 live test launches, including six successful launches in one month. During the year the first SRAM firing by a SAC B-52 crew had been made; two missiles launched in rapid succession from a single aircraft had hit separate targets; and a SRAM had been launched successfully from a B-52 after a 42-day alert period during which it had remained on board the aircraft without maintenance of any kind. Although comparatively small, SRAM is designed to penetrate advanced defence systems carrying a nuclear warhead. Six will be carried by the FB-111 and 20 by the B-52G and H (12 in three-round underwing clusters and eight in the aft bomb-bay, together with four Mk 28 thermonuclear weapons). Use by the forthcoming B-1A bomber is being studied.

AGM-78 Standard Arm Already operational on the USAF's F-105 and US Navy's A-6A, this second generation anti-radar missile has also been test-fired from an F-4D Phantom and is expected to be carried by the USN E-2C early warning aircraft and EA-6B ECM aircraft, whose task would be to knock out enemy ground radars in the path of A-6 attack formations. Standard ARM uses an adaptation of the Standard Missile (surface-to-air) propulsion system and was fitted initially with the passive homing head produced by Texas Instruments for Shrike. The next version had an improved seeker head developed by Maxson Electronics. A third model, now under development, has a Bendix radar receiver and General Dynamics seeker. Overall length of Standard ARM is about 14ft and launch weight about 1,300lb.

Walleye First of the modern "smart bombs" evolved for the US services, Walleye is an unpowered homing weapon that has achieved considerable success in Vietnam. After focusing the missile's TV eye on target, the pilot releases Walleye and can then turn for home as the weapon homes automatically on whatever its eye is locked on to. Electrical and hydraulic power for the guidance system are provided by a ram-air turbine.

USSR

Kangaroo Primitive though it looks, this 50ft-long turbojet-powered stand-off missile appears to remain in service with Tu-95 (Bear) bomber units. Its usefulness must be small.

Kennel Intended primarily as an anti-shipping weapon, Kennel has been seen beneath each wing of Tu-16 (Badger)

TABLE 3: AIR-TO-SURFACE MISSILES

Designation (see notes)	User	Prime contractor	Dimensions: Length	Dimensions: Span	Dimensions: Max diam	Launch wt (lb)	Max range (n.m.)
AS.20	NATO, South Africa and others	Aérospatiale	8ft 6½in	2ft 7½in	9·8in	315	3·75
AS.30	France, Germany, RAF, South Africa, Switzerland and others	Aérospatiale	12ft 9½in	3ft 3½in	13·4in	1,146	6·5
Blue Steel	RAF	Hawker Siddeley Dynamics Ltd	35ft	13ft	50in	n.r.	200
AJ.168/AS.37 Martel	RAF, French AF	Hawker Siddeley Dynamics Ltd/ SA Engins Matra	12ft/13ft 1½in	3ft 6in	15in	n.r.	n.r.
Robot RB04D	Swedish AF	Robotavdelningen	14ft 7½in	6ft 8in	19·6in	1,320	n.r.
Robot RB06A	Swedish AF	Saab-Scania Aktiebolag	11ft 10in	2ft 6in	12in	675	n.r.
AGM-12B Bullpup A	USN, USAF, RN, NATO	Maxson Corp	10ft 6in	3ft 1in	12in	571	6
AGM-12C Bullpup B	USN	Maxson Corp	13ft 7in	4ft	18in	1,785	8·7
AGM-12D Bullpup	USAF	Martin Marietta Corp	n.r.	3ft 2in	13in	n.r.	n.r.
AGM-28B Hound Dog	USAF	North American Aviation Inc	42ft 6in	12ft 2in	28in	10,147	680
AGM-65A Maverick	USAF	Hughes Aircraft Co	8ft	n.r.	12in	500	n.r.
ADM-20C Quail	USAF	McDonnell Aircraft Corp	12ft 10in	5ft 4in	25in	1,230	345
AGM-45A Shrike	USN, USAF, Israel	Naval Weapons Center	10ft	3ft	8in	400	6·5
AGM-69A SRAM	USAF	Boeing Co, Aerospace Group	14ft	n.r.	17·5in	2,240	90+
Walleye	USN	Martin Marietta Corp	11ft 3in	3ft 9in	16in	1,100	n.r.

WORLD MISSILES . . .

bombers based in the Soviet Union, Egypt and Indonesia. Rather like a miniature, pilotless MiG-15, it is turbojet-powered, with a span of about 16ft, length of around 28ft and a nose radome which may house a homing system of the kind fitted to Styx (see also Samlet, page 381).

Kelt First identified in a photograph released in Moscow in September 1968, Kelt appears to be a rocket-powered counterpart of Kennel. It is carried in the same position under each wing of the Tu-16, on a heavier rack, and has a hemispherical nose fairing which probably encloses a larger radar Kelt also has an under-belly fairing of the kind seen on the rocket-powered Styx.

Kipper Experience has shown that it is dangerous to write off any Soviet missile as being out of service; but little has been seen of this 31ft-long anti-shipping weapon since it appeared in the 1961 Tushino fly-past, clamped under the belly of Tu-16 bombers. Turbojet-powered, it looks like an inferior Hound Dog.

Kitchen Although many photographs of the Tu-22 (Blinder) supersonic bomber have been released in the past year, none has shown it carrying this 36ft-long stand-off missile. However, all the Tu-22s seen in the last big Soviet air display, in 1967, either carried Kitchen or had provision for it. Features include stubby delta wings and cruciform tail surfaces. The under-belly bulge could be an air intake but is more likely to be a radome as it is logical to expect Kitchen to be rocket-powered.

TABLE 4: SURFACE-TO-AIR MISSILES

Designation (see notes)	User	Prime contractor	Dimensions: Length	Dimensions: Length boosted	Dimensions: Span	Dimensions: Max diam	Launch wt (lb)	Max range (n.m.)
Crotale/Cactus	France, South Africa, Lebanon	Engines Matra/Thomson-CSF	9ft 4in	n.a.	1ft 9·25in	5·9in	176	4·6
Masurca Mk 2 Mod 3	French Navy	Ruelle Naval Arsenal	17ft 4·6in	28ft 2·5in	4ft 11in	16in	4,585	27
Roland	France, Germany	Aérospatiale/MBB	7ft 10·5in	n.a.	1ft 8in	6·3in	139	3·2
Indigo	—	Sietemi Elettronici SpA	10ft 6in	n.a.	2ft 7in	7·5in	214	5·4
Bloodhound Mk 2	RAF, Singapore, Sweden, Switzerland	British Aircraft Corp Ltd	25ft 2in	27ft 9in	9ft 3·5in	21·3in	n.r.	43+
Blowpipe	—	Short Brothers & Harland Ltd	4ft 6in	n.a.	10·5in	3in	n.r.	n.r.
Rapier	British Army, RAF Regiment, Iran	British Aircraft Corp Ltd	7ft 3in	n.a.	1ft 3in	5in	n.r.	n.r.
Seacat	RN, RAN, RNZN, Sweden, Neth, Brazil, Chile, Germany, Malaysia, India, Iran, Argentina, Libya, Venezuela	Short Brothers & Harland Ltd	4ft 10·3in	n.a.	2ft 1·6in	7·52in	a.r.	n.r.
Sea Dart	RN, Argentina	Hawker Siddeley Dynamics Ltd	n.r.	14ft 3·5in	3ft	16·5in	n.r.	19½
Seaslug Mk 2	RN	Hawker Siddeley Dynamics Ltd	20ft	20ft	4ft 6·6in	16·1in	n.r.	n.r.
Thunderbird Mk 2	British Army	British Aircraft Corp Ltd	20ft 10·6in	20ft 10·6in	5ft 4in	21in	n.r.	n.r.
MIM-23A Hawk	USA, USMC, NATO, Israel, Japan, Korea, Spain, Sweden, Saudi Arabia, Taiwan	Raytheon Co (NATO, Setel)	16ft 6in	n.a.	3ft 11½in	14in	1,295	19
MIM-14A Nike Hercules	USA, ANG, NATO, SEATO, Japan	Western Electric Co (Douglas Airframe)	26ft 10in	41ft	7ft 8in	31·5in	10,000	76
MIM-43A Redeye	USA, USMC, Sweden, Australia	General Dynamics/Pomona	4ft	n.a.	n.a.	2·75in	29	n.r.
XLIM-49A Spartan	US Army	McDonnell Douglas Corp	—	55ft	n.r.	n.r.	n.r.	n.r.
Sprint	US Army	Martin Marietta/Orlando	n.r.	27ft	n.a.	54in	7,500	n.r.
RIM-66A Standard Missile	USN	General Dynamics/Pomona	14ft+	n.a.	n.r.	n.r.	1,300	13+
RIM-67A Standard Missile	USN	General Dynamics/Pomona	n.r.	26ft+	n.r.	n.r.	3,000	30+
RIM-8 Talos	USN	Bendix Corp, Mishawaka	21ft	38ft	9ft 8in	28in	7,800	60+
RIM-24A Tartar	USN, RAN, France, Italy, Japan	General Dynamics/Pomona	15ft	n.a.	1ft 8in	13·4in	1,200+	10
RIM-2D Terrier	USN, RNethN, Italy	General Dynamics/Pomona	14ft 10in	27ft	1ft 8in	18in	3,000	20
Guideline ("Mk 2")	USSR, Warsaw Pact countries, Cuba, Egypt, Indonesia, Iraq, N. Vietnam	—	27ft	35ft	5ft 7in	26in	5,000	22

Propulsion	Airframe	Guidance	Control	Warhead
Cordite-type boost and sustainer charges	Aluminium	Visual radio command (line of sight) Optional optical aiming/infra-red guidance	Jet-deflection	66lb h.e.
Solid-propellant boost and sustainer charges	Al alloys	Visual radio command (line of sight) Optional optical aiming/infra-red guidance	Jet-deflection + fins	510lb h.e.
Bristol Siddeley Stentor, high-test peroxide + kerosene	Mixed	Elliott Automation inertial	Ailerons, foreplanes, rudder	Thermonuclear
Hotchkiss-Brandt and Aerospatiale solid-propellant	n.r.	British, television guided; French, anti-radar homing	Four cruciform wings, four tail fins	h.e.
Solid-propellant motor	Light alloy	Autopilot + high-efficiency homing	Ailerons and foreplanes	660lb h.e.
Volvo Flygmotor storable liquid-propellant	Aircraft metals	Radio command (line of sight)	Tail control surfaces	h.e.
12,000lb Thiokol LR58-4 packaged acid/amine	Light alloy	Pilot command via bang-bang radio link	Four canard fins	250lb h.e.
33,000lb Thiokol LR62-2 packaged acid/amine	Light alloy	Pilot command via all-weather system	Four canard fins	1,000lb h.e.
33,000lb Thiokol LR62-2 packaged acid/amine	Light alloy	Offset command via proportional radio link	Four canard fins	Nuclear or h.e.
7,500lb (s.l.) Pratt & Whitney J52-3 turbojet	Light alloys	NAA Autonetics inertial	Ailerons, foreplanes	Thermonuclear
Thiokol TX-481 solid-propellant	n.r.	Automatic television homing	Four/rear-mounted fins	h.e.
2,450lb GE J85-7 turbojet	Glass-fibre	Guidance Technology autopilot (pre-set)	Aircraft type	e.c.m.
Rocketdyne Mk 39 Mod 3 solid-propellant	n.r.	Texas Instruments S-band passive homing	Four moving wings	h.e.
Lockheed LPC-415 two-pulse solid-propellant	n.r.	General Precision inertial	n.r.	Nuclear
No propulsion	n.r.	Television	Elevons	h.e.

4 — Surface-to-air

FRANCE

Crotale/Cactus This all-weather surface-to-air weapon system is designed to destroy aircraft flying at speeds up to Mach 1·2 at altitudes down to 50 metres, with a reaction time of six seconds from detection of target to launch of first missile. It was developed jointly by Thomson-CSF and Engins Matra for the South African government, by whom it is known as Cactus. The French government gave some financial assistance, and the weapon system will be used also by the French services under the name Crotale. A further export order has come from Lebanon, and the US Army Missile Command will evaluate Crotale this spring in competition with US design studies for a Low-altitude Forward-area Air Defence System (Lo-FADS) to replace Chaparral in the late 1970s.

In the standard Crotale/Cactus weapon system, four missiles in containers, are carried on a wheeled launch vehicle, together with a monopulse fire-control radar capable of guiding two missiles simultaneously. Guidance is by radio command, a transponder on each missile enabling it to be tracked by radar. Acquisition of the missile after launch is facilitated by an infra-red unit which picks up the exhaust heat emission; an optical tracking device is also provided. Up to three launch vehicles are served by a single vehicle-mounted pulse-Doppler surveillance radar with a reported range of 8 n.m. and almost impervious to clutter. Twelve different targets can be tracked simultaneously, and 12 missiles can be fired in pairs at six targets in 11 seconds. The warhead is detonated by a proximity fuse.

Matra are responsible for the missile and Thomson-CSF for the ground equipment. The standard vehicles are air-trans-

Altitude limits (ft)	Mach no	Propulsion	Guidance	Control	Warhead
150–9,850	2·3	Matra solid-propellant	Radio command/monopulse radar	n.r.	h.e.(33lb)
n.r.	2·5+	Solid-propellant boost and sustainer	Thomson-CSF tracking and homing	Cruciform rear fins	h.e
1,650/20,000	1·6	Solid-propellant boost and sustainer	Radio command infra-red tracking	Jet-deflection vanes	h.e.
—/20,000	2·5	7,050lb solid-propellant	Beam-riding/radio command	Four moving wings	h.e. frag
n.r.	n.r.	Two R-R Bristol Thor ramjets, four solid boosts	Ferranti or AEI CW radar homing	Two moving wings	h.e.
n.r.	2+	Solid-propellant	Radio command/TV tracking	Cruciform rear fins	h.e.
n.r.	n.r.	Solid-propellant	Radio command (line-of-sight)	Cruciform foreplanes	h.e.
n.r.	n.r.	Imperial Metal Industries solid boost/sustainer motor	Radio command, visual or radar tracking	Four moving wings	h.e.
n.r.	n.r.	R-R Bristol Odin ramjet + 1st stage IMI solid boost	Marconi semi-active radar homing	Cruciform rear fins	h.e.
n.r.	n.r.	ICI solid sustainer, four solid boosts	GEC coded radar beam-riding	Sperry, rear fins	h.e.
n.r.	2+	Four solid boosts, solid sustainer	CW radar semi-active homing by prime	Cruciform rear fins	h.e.
100/40,000	2·5	Aerojet-General M22 E8 solid boost and sustainer motor	Semi-active CW/Doppler radar by prime	Trailing-edge controls	h.e.
10,000/150,000	3·53	Thiokol tandem booster and M30 solid sustainer	Radar command by prime	Trailing-edge controls	Nuc. or h.e.
—/5,000	1+	Atlantic Research solid boost and sustainer	GD/Pomona IR homing	Motor deflection	h.e.
n.r.	n.r.	Three-stage, all solid: 1, Thiokol TX-135; 2, Thiokol TX-238; 3, Thiokol TX-239	Bell Telephone radar command	n.r.	Nuclear
n.r.	n.r.	Hercules solid boost and sustainer	Bell Telephone radar command	n.r.	Nuclear
n.r.	n.r.	Navy Ordnance System and Command solid boost sustainer	GD/Pomona semi-active homing	Cruciform rear fins	h.e.
n.r.	n.r.	Navy Ordnance System Command tandem solid boost and sustainer	GD/Pomona semi-active homing	Cruciform rear fins	h.e.
10,000/90,000	2·5	Allegany tandem solid boost: 40,000 h.p. Bendix integral ramjet	Sperry beam-riding + semi-active homing	Cruciform moving wings	Nuc. or h.e.
1,000/40,000	2·5+	Aerojet-General boost and sustainer charges	Raytheon CW semi-active homing	Folding rear fins	h.e.
2,000/65,000	2·5	Allegany Ballistics Lab tandem solid boost and sustainer	GD/Pomona beam-riding + semi-active homing	Cruciform rear fins	h.e.
—/60,000	3·5	Liquid-propellant sustainer (nitric acid/hydrocarbon fuel) and solid boost	Automatic radio command	Elevons on booster fins, cruciform rear fins	h.e. (268lb)

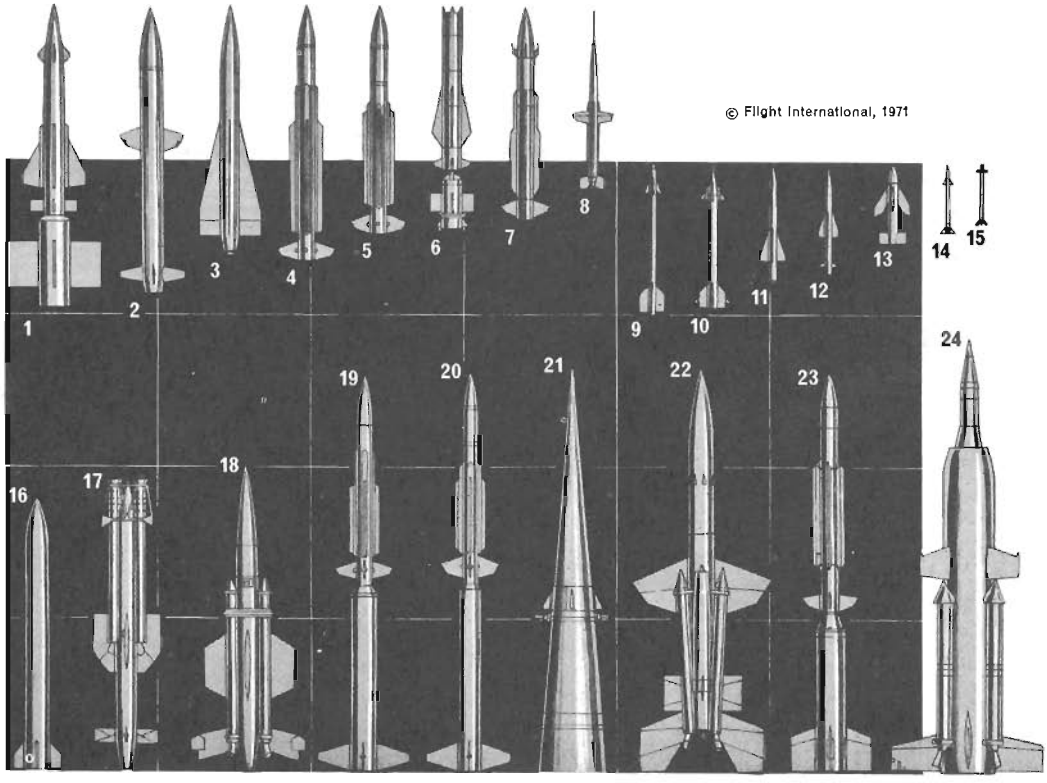

Surface-air 1, Goa; **2**, Gainful; **3**, Hawk; **4**, Standard Arm; **5**, Tartar; **6**, Sea Dart; **7**, Aegis; **8**, Indigo; **9**, Chapparal; **10**, Crotale; **11**, Roland; **12**, Rapier; **13**, Seacat; **14**, Blowpipe; **15**, Redeye; **16**, Sam-D; **17**, Seaslug; **18**, Thunderbird; **19**, Standard; **20**, Advanced Terrier; **21**, Sprint; **22**, Bloodhound; **23**, Masurca; **24**, Ganef. The background grid is divided into 10ft squares

WORLD MISSILES . . .

portable in aircraft such as the C-130 and Transall C.160. In addition Thomson-CSF are developing a navalised version named Murène. In a test of standard production missiles at Landes test centre last autumn, two Crotales were fired in salvo against a target flying less than 150ft above sea level, with complete success. This was the first known occasion on which a surface-to-air weapon system had guided simultaneously more than one missile fired from the same vehicle against one target. Initial deliveries of Crotale/Cactus are imminent, with full production scheduled for 1972.

Masurca Mk 2 The original beam-riding Mk 2 Mod 2 version of Masurca was followed last year by the "self-homing" Mk 2 Mod 3. They form the primary anti-aircraft defence system on the frigates *Suffren* and *Duquesne*, each of which carries a twin-launcher and 48 missiles. Masurca will also equip the cruiser *Colbert*, now refitting. Two missiles can be fired within a few seconds against one or two targets, with target priority established by radar.

Roland Between December 2 and 8, 1970, four of these Franco-German low-altitude surface-to-air missiles were fired against a CT.20 target drone; all achieved successful interceptions and the fourth missile, fitted with a warhead, destroyed the drone. Both the French and German armies will conduct experimental firing trials this year. An initial contract for 65 firing units for the French army is expected to be followed by a further order for 135 units under the 4th Five-Year Plan. German production contracts will be placed at the end of the evaluation phase, late this year.

The initial version of Roland is a fair-weather weapon which can be tube-launched from light armoured vehicles against low-flying aircraft and helicopters flying at speeds up to Mach 1·3. Target detection in azimuth is by means of pulse-Doppler surveillance radar with a range of 8 n.m., carried by the launch vehicle. In-flight guidance is by the TCA optical aiming/infra-red tracking system developed for the Harpon missile (page 392). The complete weapon system can be carried by modified versions of the French AMX-13 and German Spz tanks, in each case with a total of ten missiles.

Under development, primarily for the German army, is the all-weather Roland II, which involves only the addition of a radar guidance device to the basic weapon system. A shipborne version of Roland II, using a twin-launcher, has been projected by Aérospatiale.

ITALY

Indigo This short-range surface-to-air land-based missile is being evaluated by the Italian Army, following highly successful firing trials in Sardinia. Its warhead is detonated by a Hawker Siddeley Dynamics infra-red proximity fuse.

Sea Indigo Suitable for close-range defence of all classes of naval vessel, this ship-to-air version of Indigo utilises automatic or manual reloading according to the size of the craft.

GREAT BRITAIN

Bloodhound Although no longer in production, the Mk 2 Bloodhound continues to be deployed by RAF Strike Command in the UK and 25 Sqn at Bruggen, Laarbruch and Wildenrath airfields in Germany. The Singapore Government has taken over those previously deployed by the FEAF; others form important elements of the Swedish and Swiss air defences. With a CW guidance system, Bloodhound 2 has a maximum range of more than 43 n.m. but is effective against fast targets at heights well below 1,000ft.

Blowpipe Now at an advanced stage of development, Blowpipe is expected to become a standard battlefield defence weapon in the British Army and to be an even bigger export

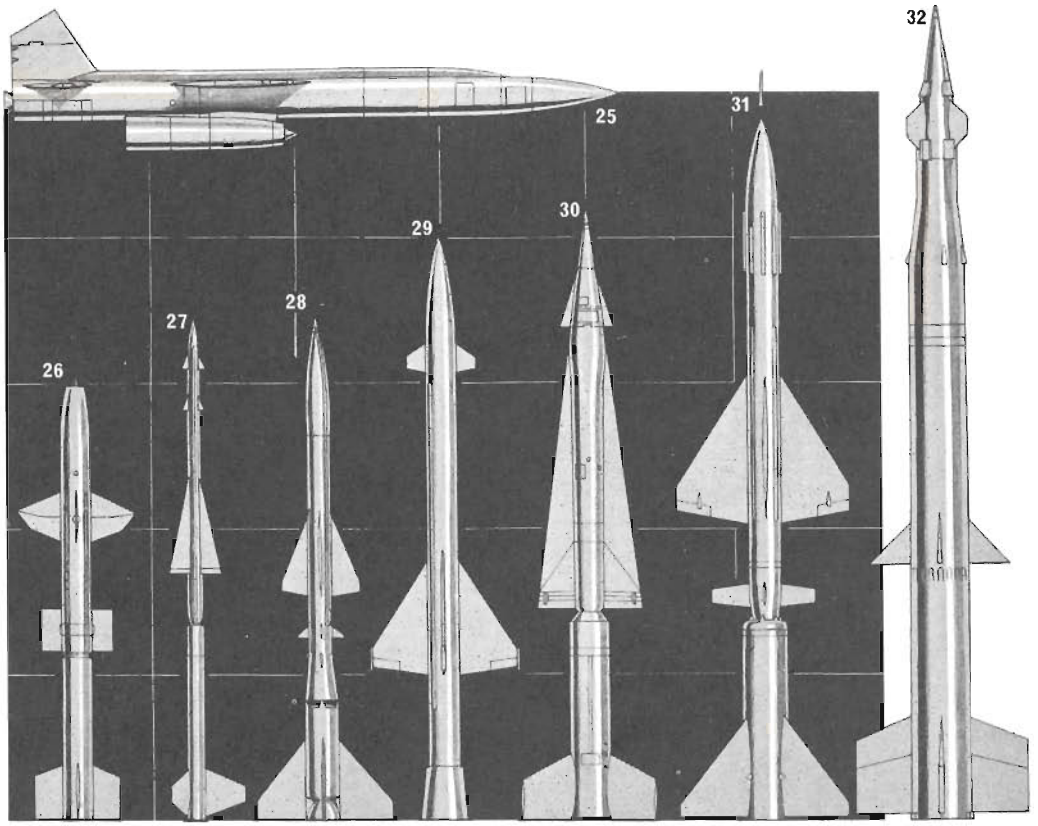

© Flight International, 1971

Surface-air (continuation) **25**, Bomarc; **26**, Talos; **27**, Nike Ajax; **28**, Guideline; **29**, Guild; **30**, Nike Hercules; **31**, Griffon; **32**, Spartan. The background grid is divided into 10ft squares

success than Seacat and Tigercat. The complete weapon system weighs less than 40lb and can be carried by a soldier, fired from the shoulder and air-dropped in a multi-round pack. It comprises only the missile in its container/launch-tube, and an aiming unit attached to the container and housing all the ground equipment.

Blowpipe can be converted from transport configuration to operational readiness in 20sec. In its man-portable role the operator then supports the launch-tube on his shoulder, sights the target through an integral monocular sight and steers the missile in flight by a thumbstick. Guidance is by Short's well-proven command link technique and the warhead is detonated by an infra-red proximity fuse. A unique sliding-ring tail-fin assembly, housed in the large-diameter forward section of the launch-tube, locks in place at the rear of the missile as Blowpipe leaves the launcher. Multiple launchers for mounting on land vehicles, ships and helicopters are being studied, including the Vickers Shipbuilding Group's SLAM (submarine launched air missile) system, of which preliminary trials began early last year.

Rapier After three years of highly successful firing trials, this low-level anti-aircraft weapon system will enter service this year with both the British army and the RAF Regiment. It is highly mobile, requiring the use of only two Land-Rovers in its basic form. One tows the launcher trailer and carries the tracker, radio equipment, four missiles in sealed containers and three members of the firing crew. The other tows a trailer carrying nine more missiles and transports additional equipment and two crew.

The performance and reaction time of Rapier ensure a high kill probability against subsonic or supersonic targets from ground level up to 10,000ft-11,000ft; yet the missile can be operated by one man, with a second standing by as relief operator and to assist in reloading. Immediately a target is detected it is interrogated automatically; the operator is alerted if no "friendly" signal is returned by an IFF transponder on the aircraft. The missile launcher and tracker align themselves automatically on the general bearing of the target. The operator then acquires the target optically in elevation and begins to track it, using a joystick control; the launcher follows the tracker in both elevation and bearing. When the target is at optimum range, a red light flashed by the system computer tells the operator to launch a missile. He guides it by keeping the target centred in his sight, with the aid of tracking flares carried by the missile. The computer steers the Rapier along the line of sight by command link to ensure a direct hit on the target. No proximity fuse is fitted.

"Into-action" time can be further reduced by mounting the tracker semi-permanently on the Land-Rover that transports it. The launcher can be lifted tactically by a Wessex helicopter, with the tracker, missiles and firing crew following as a second load. Design studies have shown that Rapier could be mounted successfully on a variety of tracked armoured vehicles; and a "Blindfire" radar tracking system will be offered as an "add-on" feature to permit engagement of targets in darkness or poor visibility when optical tracking is impossible. Meanwhile the first export order, worth £47 million, has been placed by Iran.

Seacat World's most widely used ship-borne guided weapon system, Seacat has been the Royal Navy's standard short-range anti-aircraft missile since 1962, on everything from *Leander*-class frigates to the aircraft carrier *Hermes*. The latest RN order, announced a year ago, included armament for the gas-turbine-powered Type 21 frigates, the first of which will not be completed until mid-1972. Other planned installations will ensure that Seacat remains operational in the RN until at least the mid-eighties. Fourteen other navies operate Seacat, usually on the standard four-missile launcher

but with a variety of fire-control systems for both visual and "dark" firing. Also operational is a lightweight version, using a three-round launcher, and this was chosen last October to arm the six Vosper Mk 10 frigates which have been ordered by the Brazilian Navy for service throughout the 1980s. In all cases, Seacat has a secondary role as a surface-to-surface weapon.

Seacat's success stems from its proven accuracy, simplicity, low cost and ability to operate in conjunction with gunnery fire-control systems, making it equally suitable for new ships and those being modernised. Already, use of Marconi 323 series closed-circuit TV enables the operator to be sited in a less vulnerable position; a similar system is being developed for automatic missile tracking. On the Royal Navy's Type 21 frigates, for example, Seacat will be integrated with computerised weapon-control systems, providing for control of both anti-aircraft and surface vessel engagements, with radar, TV or visual aiming.

Sea Dart R&D firing trials of this medium-range area-defence ship-to-air weapon have been underway since 1965 and sea-going trials from the RN's new guided missile destroyer, HMS *Bristol*, will start this year. Sea Dart will also be carried by Type 42 destroyers, of which the first, HMS *Sheffield*, was laid down in January 1970, followed by two similar ships for the Argentine navy. It was designed for compatability with vessels too small to accomodate Seaslug, yet is capable of intercepting aircraft at both very high and extremely low altitudes, as well as many kinds of air- and surface-launched missiles. The overall weapon system can deal simultaneously with multiple targets and has a surface-to-surface capability. The missile warhead is detonated by a proximity fuse.

Seaslug Plans to replace with Mk 2 Seaslugs the Mk 1 missiles carried by the Royal Navy's first four *County* class destroyers have been abandoned, mainly for financial reasons. Prolonged development of the Mk 2 was completed with three successful firings from HMS *Fife* at the US missile range, Barking Sands, Honolulu, last August. Like the early version, it is fired from a twin-launcher and uses beam-riding guidance, but offers longer range, improved performance against low-flying targets and surface-to-surface capability. It is carried by the last four *County* class ships.

Seawolf More than two years ago *Flight* commented that "Very little may yet be said about this next-generation Seacat-type missile" which was first mentioned in the government's 1967 Defence Estimates. The situation has not changed. BAC's Guided Weapons Division received the design contract for Seawolf in June 1967; Marconi are responsible for the associated radars and control system, and Vickers Ltd for the launcher. It will be a fast-reaction all-weather weapon for use against supersonic anti-ship missiles and aircraft, with surface-to-surface capability. Once a target has been identified as hostile, all phases of launch and guidance will be automatic. Nothing else may be said except that "Seawolf will incorporate techniques of the successful and inexpensive Rapier missile." It will be carried by later Type 21 fast frigates and the projected Type 22.

Thunderbird The Mk 2 version of this solid-propellant semi-active homing weapon equips No 36 Heavy Air Defence Regiment of the Royal Artillery, stationed in Germany. Each Thunderbird battery has its own surveillance and height-finding radars and a battery command post which can control up to six firing troops. Each firing troop has a launch control post, a target illuminating radar and three missile launchers. Compared with the original Mk 1 Thunderbird, the Mk 2 version offers increased range, improved low-altitude cover and great resistance to countermeasures by reason of its CW radar. It is highly mobile and air-transportable, and can be supplied as a component of BAC's Thunderbird 22 comprehensive air defence system, which includes also defensive radars, Rapier missile systems and GCI control of fighter aircraft.

Tigercat This short-range surface-to-air missile is identical with Seacat. The complete weapon system is fully mobile, requiring only a director trailer and a launcher trailer, each towed by Land-Rover. The director trailer carries the aimer's bin, with a binocular sight, transmitter for missile commands, launch computer, launch control panel and radio. The launcher trailer carries the three-round launcher platform and firing sequence unit. Four missiles, a generator, test equipment, a second radio and other items are carried by the Land-Rovers. Tigercat is operational with the RAF Regiment and Imperial Iranian Air Force. It has been sold also to Jordan, Qatar and two other countries.

USA

Aegis Similar in size to the RIM-66A medium-range Standard Missile, Aegis is at an early stage of development as the US Navy's next-generation shipboard surface-to-air weapon. It is of fairly conventional configuration, with a dual-thrust solid-propellant motor and semi-active radar guidance. Prime contractor is RCA, with particular responsibility for the phased-array radar. Bendix is contractor for missile design and support, with Raytheon handling the microwave target illuminator and other electronics.

Chaparral The cost and development time of this battlefield surface-to-air weapon system, now designated MIM-72A, were reduced by basing it on the already-proven Sidewinder 1C, produced originally for the air-to-air role. The four-round fire unit can be trailer-mounted or operated from a semi-mobile emplacement, but is normally carried on an M730 tracked vehicle. This is amphibious when fitted with a "swim kit", has a speed of up to 40 m.p.h. and can carry a five-man crew with combat gear and rations for at least three days of autonomous operations. A total of 12 missiles is carried. In action, the operator has only to align the fire unit visually on target; after launch the IR missile homes automatically on the enemy aircraft. Each of the US Army's new air defence battalions has two batteries of Chaparrals and two of Vulcan 20mm guns.

MIM-23A Hawk Ten-and-a-half years after it first became operational, this pioneer low-altitude weapon is still regarded so highly that development continues. Aerojet Solid Propulsion Company has received an initial $2·2 million contract from the US Army Missile Command for improved motors, using an advanced solid propellant which increases the missile's performance. The Army plans also to spend more than $58 million under FY 1971 funding on new equipment which will shorten Hawk reaction time and improve guidance, although the missile radars will still be limited to tracking two targets simultaneously. Following the delivery of new self-propelled launchers, each SP Hawk platoon of the US Army now has three tracked vehicles, each carrying three ready-to-fire missiles and towing an item of ground support equipment. Hawk production by Setel in Europe has been completed, but Mitsubishi will continue manufacture for the JGSDF until 1977.

MIM-14A Nike Hercules About 14½ battalions of Nike-Hercules and two battalions of Hawks remain operational in the USA, plus six USAF squadrons of long-range CIM-10B nuclear-warhead Bomarcs. Other Nike-Hercules are deployed by US and NATO forces overseas, and Mitsubishi is building the weapon system under licence in Japan.

MIM-43A Redeye Since 1968 each armoured, infantry and artillery battalion of the US Army in Europe has had a Redeye section composed of one officer, a sergeant and from four to six two-man firing teams. Redeye is also used by the US Marines and the Australian and Swedish Armies for combat area defence against low-flying aircraft.

Safeguard This is America's ballistic missile defence system which superseded the former Sentinel project when it was admitted that defence of cities was impracticable. Under Phase 1 of the Safeguard programme, the Minuteman ICBM wings at Malmstrom and Grand Forks are each being provided with a Missile Site Radar (MSR), a Perimeter Acquisition Radar (PAR) and Sprint and Spartan ABMs (anti-ballistic missiles) for defence against attack by Soviet ICBMs. Phase 2, if approved, would place Safeguard at 12 more sites, bringing the total cost to more than $15,000 million. The installation at Grand Forks is expected to be operational by late 1974.

SAM-D Intended to replace Nike Hercules and Hawk in this decade, this advanced surface-to-air weapon system has been allocated a further $83 million R&D funding for FY 1971. It has reached the stage of full-scale test vehicle firings at White Sands Missile Range. In its operational form, it will be deployed as a battery on approximately 12 vehicles, including six-round launchers.

SAM-D is being developed by Raytheon as prime contractor, with Martin Marietta/Orlando responsible for the missile and its shipping/launch canister, and Thiokol for the single-stage solid-propellant motor. Guidance will be by command and semi-active homing, via cruciform tail surfaces, and alterna-

tive nuclear or h.e. warheads will be available. A single phased-array radar will detect and track targets, and track and issue guidance commands to the missile.

RIM-7H Sea Sparrow This ship-launched version of the air-to-air Sparrow is finding widespread acceptance for short-range defence against aircraft and missiles. Already operational with the US Navy, it has been evolved in another form by Raytheon Canada Ltd, while Norway, Denmark, Italy, The Netherlands and the USA have developed jointly a NATO Sea Sparrow system.

Spartan On August 28 last year a Spartan ABM launched from Kwajalein Atoll in the Pacific intercepted a Minuteman 1 nose-cone some 4,200 miles from Vandenberg AFB, where the ICBM had been launched. The successful intercept, at an altitude of about 100 miles, was directed by a prototype Safeguard MSR; no warhead was carried by the Spartan. The operational Spartan will be able to intercept incoming re-entry vehicles above the atmosphere, over a range of several hundred miles. All phases from detection to destruction of the target will be fully automatic, with manual override.

Sprint Spartan's success was matched by its short-range partner in the Safeguard defence system on December 23, 1970, when a Sprint fired from Kwajalein intercepted a Minuteman warhead under MSR guidance. Conical in shape, Sprint is "popped" from its silo launcher by a separate charge and its own motor does not ignite until it is clear of the ground. It has the highest acceleration of any US missile, to provide a "last-ditch" defence if there were insufficient time for Spartan to be launched effectively.

Standard Missile General Dynamics is producing the two versions of Standard Missile under a $120,651,191 six-year contract received in March 1967. The single-stage RIM-66A and two-stage RIM-67A are similar in external appearance to the Tartar and Terrier missiles respectively, which they are replacing on some 50 ships of the US Navy, with only minor modifications to the ship-board launch and control systems. Standard Missiles have all-solid-state electronics and an all-electric control system.

RIM-8-G-AAW and RGM-8-H-ARM Talos Six USN cruisers continue to operate this missile, including the nuclear-powered *Long Beach* which used Talos to destroy two MiGs over North Vietnam in 1968, with intercepts in the 60 n.m. range. Talos has a surface-to-surface capability.

RIM-24 Tartar Although no longer in production, this medium-range SAM continues to equip cruisers and destroyers of five navies.

RIM-2 Advanced Terrier Like Tartar, this missile was phased out of production in 1968 but remains operational on many ships.

USSR

Gainful About 19ft 6in long, this compact solid-propellant missile is carried on a tracked triple-launcher and probably serves the same role as the American Hawk. It was first displayed in November 1967.

Galosh According to official US statements, this ABM was installed at about 67 launch sites around Moscow by mid-1970. It must require extensive ground support equipment, and the trailer-container in which it has been carried in Moscow parades is probably no more than a transporter. Only the four first-stage nozzles have been visible, but the container is about 67ft long, with a diameter of 9ft.

Ganef Unique among Soviet missiles in being ramjet-powered, this formidable-looking anti-aircraft weapon has been displayed on its twin-launcher in Moscow parades since 1964. Three Ganef vehicles emerged from an An-22 transport aircraft at Domodedovo in 1967, emphasising the highly mobile nature of the weapon system. The missile is about 30ft long, with a body diameter of 32in, is launched with the aid of four jettisonable wrap-round boosters and has a command-guidance system. The wings are pivoted for control.

Goa Known to the Western Press as SA-3 or SAM-3, this is the two-stage missile which caused such comment when it was installed along the Suez Canal by Soviet technicians last year. First displayed publicly in 1964, it is small enough to be carried in pairs by the truck used as tractor for the trailer-transporters of Guideline and Guild. Goa is about 20ft long, with a wing span of 4ft and second-stage diameter of 18in. Fore-plane control surfaces are fitted. In addition to its use ashore (including an estimated 15 batteries in Egypt) it is a standard close/medium-range weapon on ships of the Soviet Navy. At least 25 Soviet destroyers are each fitted with one or two twin-launchers for Goa; the helicopter carriers *Moskva* and *Leningrad* have twin-launchers for improved missiles of somewhat similar type. US reports give the Goa's slant range as 13 n.m. and its maximum effective altitude as 40,000ft.

Griffon This 54ft-long multi-stage weapon has participated in Moscow parades for eight years and has been described by commentators as an ABM. This is unlikely; at best it is probably a long-range anti-aircraft missile with limited anti-missile capability.

Guideline Standard anti-aircraft equipment throughout the Soviet Union, the Warsaw Pact nations and Russia's friends and allies, including Egypt. Guideline was first displayed in public in 1957. It has undergone continuous development and the latest version, first shown in 1967, is some 15in longer than its predecessors, with an enlarged warhead that may be nuclear. Extensive operational use in North Vietnam, and on a lesser scale in Egypt, has revealed Guideline's lack of manœuvrability and low-attitude effectiveness. It is known to the Western Press as the SA-2 or SAM-2.

Guild After several years' absence, this missile put in an appearance in a Moscow parade on November 7, 1969, and is now thought to be a standard operational weapon. It appears to have a dual-thrust solid-propellant motor and is about 39ft long.

5 — Air-to-air

FRANCE

Matra R.511 This first-generation French weapon is in diminishing service on Vautour and Mirage IIIC intercepters.

Matra R.530 Standard armament on Vautour and Mirage intercepters of the French Air Force, F-8E(FN) Crusaders of the French Navy, and Mirages of the Royal Australian, Israeli and South African Air Forces. It is an all-weather weapon, with interchangeable infra-red and semi-active radar homing heads, and is not limited to pursuit-course attack.

Magic Known originally as the R.550, this short/medium-range "dogfight" missile has been under development since 1967, initially as a private venture. It was allocated Fr30 million (£2·3 million) under the French Air Force's 1971 budget.

GREAT BRITAIN

Firestreak This pursuit-course missile achieved an 85 per cent success rate in firing trials under a wide range of conditions. It is standard armament on Lightnings and Sea Vixens.

Red Top To the proven capability of Firestreak, Red Top added the possibility of attack from any direction. The two weapons are interchangeable on the Sea Vixen F(AW).2 and later marks of Lightning.

SRAAM 100 Known originally as Taildog, this infra-red homing short-range air-to-air missile is being developed by Hawker Siddeley Dynamics under a study contract. Benefiting from experience with Firestreak and Red Top, it is designed from the outset for high reliability, low cost and compatibility with any type of intercepter, air superiority fighter, strike or reconnaissance aircraft without aircraft modification. It would be complementary to medium-range missiles. Overall length is 110in and body diameter 6·5in.

JAPAN

Mitsubishi AAM-1 Delivery of this nationally designed infra-red homing missile to the JASDF began last November, and half of the currently planned total of 330 were scheduled for service by the end of the year. They are replacing Sidewinders on JASDF intercepters.

Mitsubishi AAM-2 This improved infra-red homing weapon will not be limited, like the AAM-1, to pursuit-course attack. It is expected to be ready for service by 1973.

SOUTH AFRICA

The South African Minister of Defence, Mr P. W. Botha, announced on May 2, 1969, that an air-to-air missile was

TABLE 5: AIR-TO-AIR MISSILES

Designation (see notes)	User	Prime contractor	Dimensions (in) Length	Span	Max diam	Launch wt (lb)	Range (n.m.)	Peak alt (ft)
Matra R.511	France	SA Engins Matra	121·5	39·5	10·24	397	4	59,000
Matra R.530	France, RAAF, Israel, S. Africa	SA Engins Matra	129·25	43·3	10·24	430	9·5	69,000
Firestreak	RAF, RN, Saudi-Arabia	Hawker Siddeley Dynamics Ltd	125·5	29·4	8·75	300	4·3	n.r.
Red Top	RAF, RN	Hawker Siddeley Dynamics Ltd	137·7	35·7	8·75	n.r.	6	n.r.
AIM-4D Falcon	USAF	Hughes Aircraft Co	79·5	20	6·4	134	5	n.r.
AIM-4F Falcon	USAF, CAF	Hughes Aircraft Co	86	24	6·6	150	6	70,000
AIM-4G Falcon	USAF, CAF	Hughes Aircraft Co	81	24	6·6	145	6	50,000+
AIM-26A Falcon	USAF, CAF	Hughes Aircraft Co	84	20	11	203	4·3	50,000+
AIM-47A Falcon	—	Hughes Aircraft Co	144	36	13	800	n.r.	n.r.
AIM-54A Phoenix	USN	Hughes Aircraft Co	158	36	15	838	85+	n.r.
AIR-2A Genie	USAF, CAF	McDonnell Douglas Corp	115	39·5	17·4	820	5·2	60,000+
AIM-9D Sidewinder IC	USN, UK	Raytheon Co	114·5	25	5	185	2+	50,000+
AIM-7E Sparrow	USN, USAF, Britain, Italy	Raytheon Co	144	40	8	450	7+	60,000+
Atoll	USSR, Poland, Afghanistan, Egypt, Cuba, Finland, Hungary, India, Indonesia, Czechoslovakia, Iraq, E. Germany, Rumania, N. Vietnam, Syria, Yugoslavia, etc.	—	110	20·7	4·72	n.r.	n.r.	n.r.

WORLD MISSILES . . .

being developed as a purely South African venture. Possessing "some unique characteristics" it had already been tested successfully on a range at St Lucia.

USA

Agile Although the USAF has cancelled development of its AIM-82A short-range "dogfight" missile in favour of the AIM-9J Sidewinder, the US Navy is continuing work on its counterpart, known as Agile. Larger, heavier and with a bigger warhead than the AIM-82A, Agile is intended as armament for the Grumman F-14. The Naval Weapons Centre, China Lake, has responsibility for it, with Hughes Aircraft already holding a contract for the infra-red seeker.

AIM-4 and AIM-26 Falcon The versions of Falcon listed in the table on this page are standard armament on the F-101, F-102 and F-106 intercepters of USAF Air Defence Command and F-4s of Tactical Air Command, including the nuclear-warhead AIM-26A. Thousands of early models have been converted to AIM-4D and AIM-4H standard, the latter with a new warhead and laser-actuated active optical proximity fuse to offer an increased kill probabiilty in close-range combat. The export model HM-55 Falcon resembles the AIM-26A but has an h.e. warhead and all-weather semi-active radar homing system. It is carried by Swiss Air Force Mirage III-S fighters and is licence-built by Saab-Scania for SwAF Drakens, together with the HM-58, and IR version similar to the AIM-4C. The AIM-47A was carried only by the YF-12A experimental fighter.

Air-air 1, Anab; **2**, Falcon 4F; **3**, Sparrow; **4**, Super Falcon; **5**, Sidewinder; **6**, Atoll; **7**, Falcon 4D; **8**, Genie; **9**, Red Top; **10**, Nuclear Falcon; **11**, Firestreak; **12**, Phoenix; **13**, Matra 530; **14**, Ash; **15**, Advanced Sidewinder; **16**, Talldog. The background grid is divided into 10ft squares

AIR-2A Genie In July 1957 this unguided rocket was used for the first-ever air-to-air firing test of a nuclear-warhead missile. It is primary armament on the F-101 and F-106 and was recently updated with a new motor.

XAIM-54A Phoenix Claimed to have capabilities exceeding those of any air-to-air weapon now operational, Phoenix was intended originally to arm the unfortunate F-111B. It has received a new lease of life as primary armament for the F-14A and 72 missiles are being bought to test compatibility with this aircraft in 1971. In recent trials, a Phoenix hit its target 68 n.m. from where it was launched. Two others, fired simultaneously from the same aircraft, scored hits on targets more than 8 n.m. apart.

AIM-9 Sidewinder While the standard versions of Sidewinder continue in large-scale service, the US Navy and USAF have initiated development of the new AIM-9H and AIM-9J respectively as armament for the F-14 and F-15 and other types. These versions are intended to offer improved close-range capability, and even more advanced "Super Sidewinders" are projected.

TABLE 6: ANTI-TANK MISSILES

Designation (see notes)	User	Prime contractor	Dimensions (in) Length	Span	Max dia	Launch wt (lb)	Speed (m.p.h.)	Range limits (ft)
Malkara 1A	Br Army, Australia	GAF, Melbourne (UK, BAC)	77·5	31·25	8	222	327	1,500/12,000
ACRA	France	DTAT	47·25	n.r.	5·5	77	1,118	—/9,850
Entac	France, USA, NATO, Canada, Australia, Indonesia	DTAT, made by Nord Aviation	32·3	14·95	5·9	26·9	190	1,300/6,800
SS.10	France and many others	Nord-Aviation	33·9	29·5	6·4	33	180	990/5,250
SS.11	France, USA, NATO, others	Nord-Aviation Aerospatiale	47	19·6	6·4	66	360	1,650/9,850
Hot	France, Germany	Aérospatiale/MBB	50	12·25	5·5	44	625	250/13,100
Milan	France, Germany	Aérospatiale/MBB	29·5	10·5	4·6	13·9	400	83/6,560
Cobra	Germany, Italy, Denmark, Pakistan, Turkey	MBB	37·5	19	3·9	22·5	190	1,310/6,560
Swingfire	Br Army	British Aircraft Corporation Ltd	42	14·7	6·7	n.r.	n.r.	500/13,125
Vigilant	Br Army, Finland, Kuwait, Saudi Arabia, Abu Dhabi	British Aircraft Corporation Ltd	42·2	11	4·5	31	350	750/4,500
KAM-3D (ATM-1)	Japan	Kawasaki	40	23·5	4·7	34.6	190	1,150/5,900
Bantam	Sweden, Switzerland	AB Bofors	33·5	15·8	4·3	18·5	190	820/6,600
Mosquito	Switzerland, Italy	Contraves AG/Contraves Italiana	43·7	23·6	4·7	31	204	1,200/7,800
Dragon	US Army	McDonnell Douglas Corp	44·5	n.r.	5	13·4	n.r.	—
MGM-51A Shillelagh	USA	Philco-Ford Corp, Aeronutronic Divn	45	n.a.	5·95	60	n.r.	—
Snapper	USSR, Egypt, etc.	—	44·5	29·5	5·5	49	201	1,650/7,650

Mach no	Propulsion	Guidance	Control	Warhead
1·8	Hotchkiss-Brandt solid: 1, 3,530lb; 2, 440lb	Pursuit, semi-active CFTH radar homing	Twist and steer elevons plus foreplane	55lb h.e.
2·7	18,740lb Hotchkiss-Brandt solid	Collision course all-angle, IR or semi-active	Four rear fins plus roll ailerons	60lb h.e.
2+	Solid motor	IR homing by prime	Four rear-mounted fins	50lb h.e.
3	Solid motor	Advanced IR homing by prime	Four rear-mounted fins	68lb h.e.
n.r.	6,000lb Thiokol M58 solid	IR homing by prime	Four trailing-edge controls	h.e.
2·5	6,000lb Thiokol M46 solid	CW semi-active radar homing by prime	Four trailing-edge controls	h.e.
2·5	6,000lb Thiokol M46 solid	IR homing by prime	Four trailing-edge controls	40lb h.e.
2	Thiokol M60 solid	Semi-active radar homing by prime	Four trailing-edge controls	Nuclear
6	Lockheed packaged liquid	IR and pulsed Doppler by prime	Four trailing-edge controls	h.e. or nuclear
n.r.	Rocketdyne solid	Radar homing by prime	Four rear-mounted fins	h.e.
3	Thiokol SR49-TC-1 solid	Spin-stabilisation only	Trajectory stabilised by flip-out fins+gyro	Nuclear (1·5kT)
2·5	Rocketdyne Mk 36 Mod 5 solid	IR homing	Canard cruciform fins	10lb h.e.
3·5+	Rocketdyne Mk 38 Mod 2 solid	Raytheon CW semi-active radar homing	Cruciform moving wings	60lb h.e.
n.r.	Solid-propellant	IR homing	Canard cruciform fins	h.e.

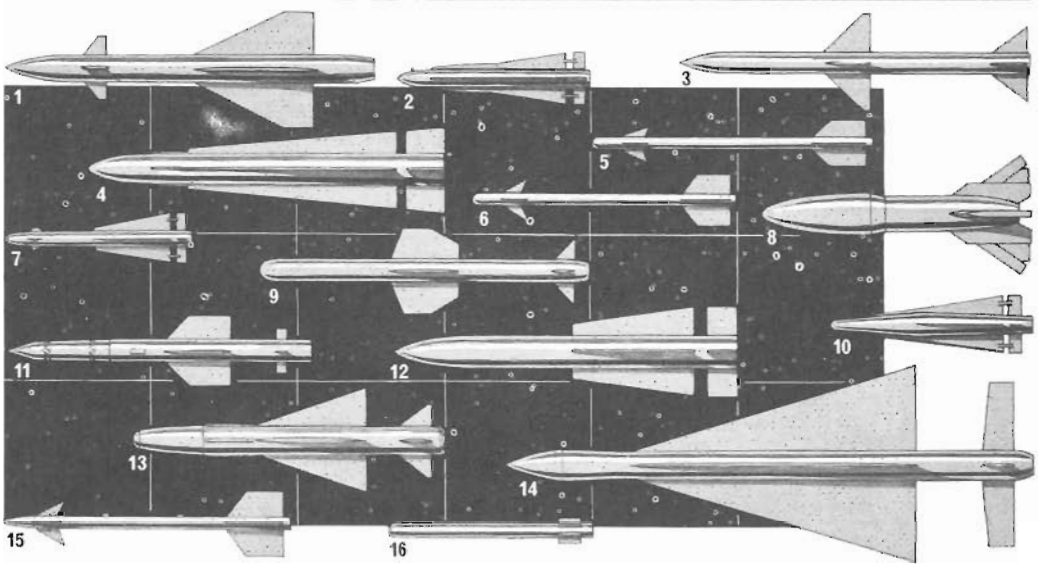

© Flight International, 1971

Propulsion	Airframe	Guidance	Control	Warhead/Penetration
Solid Boost/sustainer	Steel, light alloys and plastics	Wire, roll-stabilised	Four moving wings	57·5lb squash-head/n.r.
n.r.	n.r.	Laser, infra-red beam-rider	Tail-fins	5·5lb h.e.
Solid boost/sustainer	Steel sheet	Wire, roll-stabilised	Trailing-edge spoilers	9lb shaped-charge/25·5in
Solid boost (13g)/sustainer	Steel sheet	Wire, acceleration	Trailing-edge spoilers	11lb hollow-charge/16·5in
Solid boost/sustainer	Steel sheet	Wire, acceleration	Sustainer-jet deflection	Hollow-charge/23·6in, a.p. or frag.
Solid boost/sustainer	n.r.	Wire, optical aiming, infra-red tracking	Jet vanes	h.e.
Solid boost/sustainer	n.r.	Wire, optical aiming, infra-red tracking	n.r.	h.e.
Solid "jump" boost/sustainer	Fibre paper and phenolic reinforced plastics	Wire, acceleration, rolling	Trailing-edge spoilers	5·5lb hollow-charge/18·7in
Solid motor	n.r.	Wire, velocity	Gimballed nozzle	h.e.
ICI boost/sustainer	Light alloy and plastics	Wire, velocity	Trailing-edge flaps	13·2lb hollow-charge/22in
Solid boost/sustainer	Metal	Wire	Trailing-edge spoilers	h.e.
Solid boost/sustainer	Glassfibre	Wire, acceleration	Trailing-edge spoilers	4·1lb h.e.
Solid boost/sustainer	Reinforced plastics	Wire, acceleration, roll-stabilised	Trailing-edge spoilers	9lb hollow-charge/26+in
Solid-propellant rocket motors	n.r.	Wire, command to line of sight	Sustainer-jet deflection	h.e.
Amoco Chemicals solid	n.r.	Command	Sustainer-jet deflection	h.e., shaped charge
Solid-propellant	n.r.	Wire command	Trailing-edge spoilers	11·5lb hollow-charge/13·7in

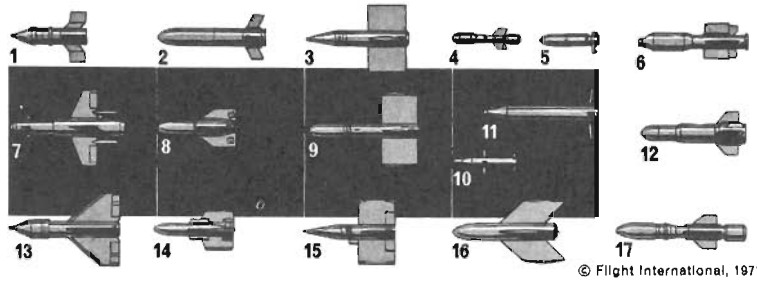

Anti-tank 1, Sagger; 2, Shillelagh; 3, Mosquito; 4, Milan; 5, Dragon; 6, Vigilant; 7, Swatter; 8, Entac; 9, ATM; 10, Tow; 11, Acra; 12, Swingfire; 13, Snapper; 14, Bantam; 15, Cobra; 16, SS.11; 17, Hot. The background grid is divided into 5ft squares

© Flight International, 1971

AIM-7E Sparrow This large all-weather missile is standard armament on F-4 Phantoms in service with many air forces and on the F-104S Starfighters being licence-built in Italy. Mitsubishi will build more than 1,000 in Japan for F-4EJs of the JASDF, and advanced versions designated AIM-7F and -G are being developed by Raytheon.

USSR

Alkali This first-generation solid-propellant Soviet missile continues in service with air forces operating the MiG-19 fighter. It is believed to be radar homing.

Anab Standard armament on the Yak-28P (Firebar), Su-9 (Fishpot) and Su-11 (Flagon-A) all-weather intercepters, this AAM is operational in infra-red and semi-active radar homing versions. Lengths are approximately 13ft 5in and 13ft 1in respectively.

Ash The Soviet Air Force's Tu-28P (Fiddler) normally carries four of these very large missiles on underwing pylons, two with infra-red homing heads and two with radar homing. Estimated lengths are 18ft and 17ft respectively.

Atoll This Soviet counterpart of Sidewinder is standard armament on all versions of the MiG-21 (Fishbed).

6 — Anti-tank

FRANCE

ACRA Like the American Shillelagh, this heavy semi- automatic anti-tank weapon is launched from a gun on an armoured vehicle. This gives it a considerable initial velocity before its own motor is fired and it cruises much faster than current missiles, so lessening the time available for reaction by the target. ACRA (Anti-Char Rapide Autopropulsé) is guided along an infra-red director beam emitted by a laser.

Entac Since this wire-guided missile was adopted by the French Army in 1957, orders have totalled 130,000 rounds, for 13 countries, and production continued in 1970. Four can be carried on a Jeep. One man can control ten missiles sited round a static firing post.

Harpon This wire-guided missile is equipping 20 mechanised regiments and five armoured regiments of the French Army. Externally Harpon is similar to the SS.11, but it was the first to use the TCA (télécommande automatique) guidance system developed by Nord-Aviation (now Aérospatiale) which frees the operator from having to acquire the missile after launch and then steer it manually by joystick.

With TCA the operator aligns an optical sight on the target. The missile, after launch, is "captured" by a precision goniometer reacting to infra-red radiation from tracking flares on the rear of the missile. The reference axis of the goniometer is accurately parallel to the optical axis so it is able to supply angular-deviation voltages which enable a computer to work out the signals that must be transmitted to the missile to get it on to the line of sight and keep it there. Signals passed to the missile, over wires, are tied to linear rather than angular deviations. A signal elaboration computer takes this into consideration by injecting range and makes other minor adjustments as necessary. Since no time is lost in acquiring the missile, TCA has made it possible to reduce the minimum effective range of Harpon to about 1,200ft. During flight it remains within less than 1m from a theorectical line which would be parallel to the optical line of sight. Aérospatiale claim that this gives it an effectiveness of 60-90 per cent in an additional surface-to-air role against low-flying aircraft. Four Harpons are carried on the NA2 turret fitted to Panhard armoured cars.

Hot Larger of the two wire-guided anti-tank missiles developed jointly by Aerospatiale and Messerschmitt-Bölkow-Blohm, Hot (High-subsonic, Optically-guided, Tube-launched) embodies the TCA guidance system (see Harpon). It can be carried in two three-round packs on the turrets of light armoured vehicles such as the French AMX-13 tank and German Spz. In a demonstration last summer, two Hots with inert warheads, fired from an AMX-13, achieved hits within 12in of the centre of a target at a range of 11,480ft. Two others were launched over a similar range from an Alouette III as part of the development programme for an air-to-surface version.

Milan This small infantry-operated anti-tank weapon is undergoing operational evaluation by French and German military personnel. It is tube-launched and wire-guided, using TCA guidance, but can be fired as a recoilless rifle over short ranges. In a demonstration last summer, a Milan holed a target representing the heaviest known tank armour at a range of 4,920ft.

SS.11 Production of this wire-guided missile continued at the rate of 900 a month in 1970, to meet orders then totalling nearly 150,000 rounds from 19 countries. SS-11 is carried by a variety of land vehicles. Variants included in the production total are the air-to-surface AS.11 and ship-board SS.11M.

GERMANY

Cobra 2000 More than 120,000 of these one-man wire-guided missiles have been delivered to the German Army and other customers. The "2000" indicates a recent extension of maximum effective range to 2,000m.

GREAT BRITAIN

Swingfire Operational with the British Army since 1969, this superb container-launched missile has a firing arc 90° from a fixed launcher, enabling it to be installed on a wide variety of vehicles. It can be turret mounted and used in a direct or separated fire role, with the controller up to 160ft from the launcher (which can be behind cover), firing round corners or over obstacles. Swingfire is gathered automatically into the controller's field of view after launch and is manoeuvrable enough to hit targets over a direct-fire range of less than 500ft. The heaviest battle tank can be destroyed out to a range of 13,125ft. Standard British Army launch vehicles are the FV 438 armoured carrier (14 missiles) and FV 712 Ferret scout car (6 missiles). Development has started on adapting Swingfire for mounting on helicopters such as the Lynx and Gazelle, the Army's new Alvis Striker reconnaissance vehicle, and (in a dismountable role) standard "B" vehicles like the Land-Rover.

Vigilant An order in 1971 from Abu Dhabi emphasises that this pioneer British wire-guided missile is still highly-effective. It will, in fact, remain an important weapon with British infantry, the Royal Armoured Corps and five overseas defence forces for many years to come. A traversible launcher on the RAC's Ferret scout cars gives Vigilant a 360° arc of fire.

JAPAN

KAM-3D Known as the Type 64 ATM by the JGSDF, this conventional wire-guided missile is carried in pairs on Jeeps, can be fired singly or in salvos by infantry and used in an air-to-surface role from helicopters.

TAN-SSM Under development since April 1966, this extended-range version of the KAM-3D is intended for use on both land and sea.

SWEDEN

Bantam Flip-open wings enable this wire-guided missile to be launched from a small container. It is standard equipment in the Swedish and Swiss armies and can be operated by infantry, from vehicles like the Puch-Haflinger light cross-country truck which carries 12 Bantams ready for firing, or from helicopters and light aircraft such as the Malmö Militrainer.

SWITZERLAND

Mosquito Production of this Swiss-designed missile by Contraves-Italiana is scheduled to end this year. It is man-portable but has also been mounted on Agusta-Bell 47 helicopters.

USA

XM47 Dragon Although the first manned firing of a live warhead took place at Redstone Arsenal as recently as January 21, the US Army is reported to have ordered 10,000 production rounds. Further contracts from the Marine Corps are estimated to have brought the total cost of developing and deploying the system to $95·4million. Intended to replace the 90mm recoilless rifle, Dragon has a unique propulsion system comprising pairs of small solid-propellant rocket motors disposed in rows around its body. In action, the operator centres the target in a telescopic sight; a tracker then senses missile position relative to his line of sight and transmits signals over wire which cause the appropriate rocket motors (side-thrusters) to fire. Corrective control forces applied by the side-thrusters guide Dragon automatically throughout its flight.

MGM-51A Shillelagh Produced in larger numbers than any previous American guided missile, Shillelagh is fired from a 152mm gun/launcher on the US Army's General Sheridan AFVs and is adaptable to a variety of other vehicles. As long as the operator keeps the cross-hairs of his optical sight on target, Shillelagh follows automatically.

XMGM-71A Tow Larger than Dragon, Tow (Tube-launched, Optically-tracked, Wire-guided) is intended to replace the US Army's 106mm recoilless rifle and Entac and SS.11 missiles. The weapon system consists of a glassfibre launch-tube, tripod, traversing and sighting unit; an electronic package; and the Tow missile in its container/launcher which forms an extension of the launch-tube. The entire system weighs about 200lb but can be broken down into four packages for carrying by infantry. It can be mounted on vehicles such as the M-113 armoured personnel carrier and a three-round pack is being developed for helicopter use. The first live firing of Tow from this pack, carried by a Cheyenne helicopter, last July, achieved a direct hit on an M-4 target tank. Production of Tow is under way against a $14 million three-year contract received in November 1968.

USSR

Sagger Latest of the three Soviet anti-tank missiles identified to date, this 30in-long wire-guided solid-propellant weapon is carried on a six-round retractable launcher by the BRDM armoured amphibious vehicle. A single zero-length launcher is also mounted above the gun of a tracked anti-tank vehicle first seen in 1967.

Snapper During the 1967 war, Israeli forces captured examples of this first-generation Soviet missile on four-round launchers carried by Gaz-69 Jeep-type vehicles. The Soviet Army now deploys Snapper on a triple launcher on the BRDM vehicle. The operator sights the target through periscopic binoculars incorporating an illuminated variable-brightness reticle. He steers the missile by joystick, keeping it on a line of sight to the target with the aid of tracking flares on two of the wings. Separated firing, at distances up to 165ft from the launcher, is possible.

Swatter This 44in-long wire-guided solid-propellant missile is normally carried on a quadruple launcher by BRDM vehicles. Control appears to be by elevons on all four wings. The two canard foreplanes also seem to be movable and may be linked to some form of homing system in the nose. ■

The All American Division Goes ADA - "All the Way"

The "All American" 82d Airborne Division, commanded by Major General George S. Blanchard, is leading the way in the modern employment of air defense artillery (ADA) weapons in division-sized units of the US Army.

The 82d received its initial complement of organic air defense artillery when the 7th Battalion (Airborne) Vulcan, 60th Air Defense Artillery, commanded by Lieutenant Colonel Joseph W. House, arrived at Fort Bragg, North Carolina, on 17 December 1970. The Vulcaneers had activated at Fort Bliss, Texas, with a headquarters battery and two towed Vulcan firing batteries. Since their arrival at Fort Bragg, the battalion has activated and trained two additional firing batteries.

Realizing the importance of air defense resources and the vulnerability of the airborne division to air attack, General Blanchard delineated ADA responsibilities. He tasked the ADA battalion commander with developing the techniques and procedures necessary for the integration of all air defense resources into a highly responsive and effective antiair organization. He further specified that the responsibility for the coordination of all airspace over the division area of operations rests with the air defense artillery battalion commander.

To assist with the accomplishment of these tasks, the air defense assets of the division were consolidated for centralized training and operational control. This consolidation consisted of adding the division's 53 Redeye teams to the already formidable force of 48 Vulcan 20-mm cannons. The ground commanders were receptive to this concept since their staffs normally lacked the air defense expertise for both training and employment of air defense weapons. In practice, the commanders of the 82d still have Redeye protection for their brigades and battalions. Now Redeye crewmen are better trained and their weapons are tactically employed in such a manner as to give the brigade the best possible integrated air defense coverage. The Redeye sections will also be linked with the ADA battalion through an FM radio net which will enable them to receive timely air defense intelligence and warning data.

The 82d Airborne Division, as an immediately responsive combined arms fighting force, must be capable of deploying a brigade-sized task force anywhere in the world in a matter of hours. To accomplish this mission, the division has habitually associated support units with each of the three infantry brigades. In response to his assigned responsibilities, Colonel House designed and organized three brigade antiair packages (BAP) which were compatible with the brigade deployment concept. The habitually associated antiair package consists of a 12-gun Vulcan battery, 15 Redeye teams, and a brigade airspace coordination element (BACE). This package is available to the brigade commander for all intensified and mission training to include field training exercises and operational readiness training tests, as well as for tactical deployment. The fourth Vulcan/Redeye battery normally remains in general support of division key installations or may be used to reinforce the brigades as required. Under this new organizational concept, the battery commander wears three hats—that of the ADA commander, ADA advisor to the brigade commander, and chief of the BACE.

ANTIAIR PACKAGE CONCEPT

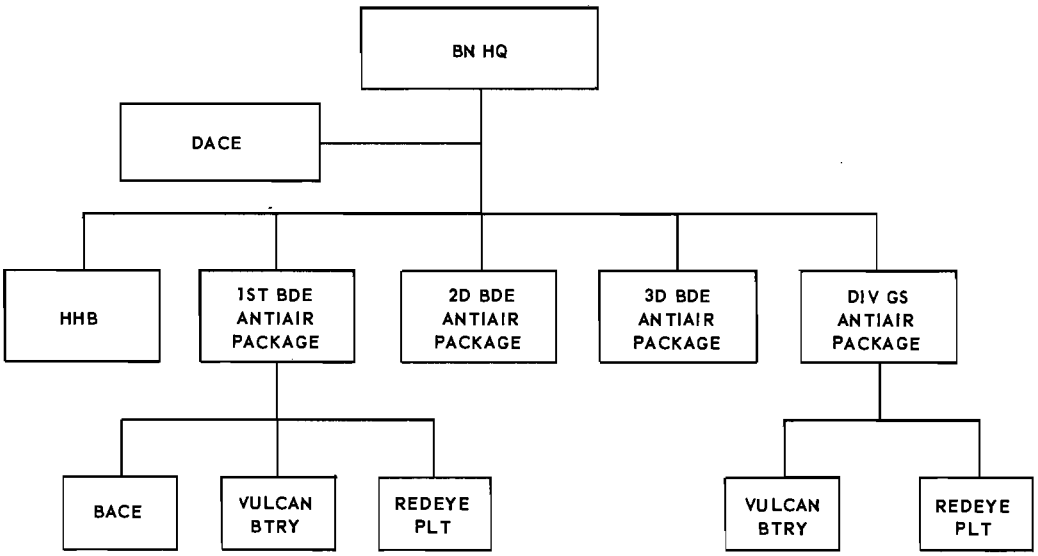

The brigade antiair package is an invaluable asset to the commander since it is highly mobile and capable of all types of airborne operations; i.e., airdrop, airland, or airmobile. This mobility has been greatly enhanced by the addition of 100 Gama Goats to the ADA battalion. The Gama Goat is the Army's new $1\frac{1}{4}$-ton, articulated, six-wheeled prime mover.

The second facet of Colonel House's mission was the control of air defense weapons and the coordination of airspace over the division. General Blanchard described airspace coordination as "one of those things we give lip service to, but don't do very well."

In the past, airspace management/control/coordination has been a secondary mission of several functional elements in operations centers throughout the chain of command. As a result, the control or coordination that did take place was "after the fact" and often ineffective. The new concept developed in the All American Division makes airspace coordination the primary function of separate and distinct elements at division and brigade level. The division airspace coordination element (DACE) and the brigade airspace coordination element act as communications monitoring elements capable of receiving and plotting locations and resolving conflicts between users of the division's airspace.

Since DACE/BACE systems require all information on airspace usage, the only timely and effective means of acquiring this information, without interfering with other operations, is to monitor the communications of all airspace users. In some instances, it was necessary to establish special communications nets where monitoring was infeasible. To accomplish this task, the DACE/BACE system was organized into six functional areas representing all users of the airspace. The six areas are chief coordinator, tactical air support, air defense artillery, army avaiation, indirect fire (Army), and naval gunfire (when applicable). Necessary personnel and equipment to operate the system are presently being drawn from resources within the 82d Airborne Division; however, appropriate modification tables of organization and equipment will be submitted as soon as the system has been adequately tested.

SGT Carlos Nieves, 7th Battalion (Airborne) Vulcan, 60th Air Defense Artillery, plots aircraft on division air-space coordination element plotting board during joint training exercise Bold Shot/Brim Fire, Eglin Air Force Base, Florida.

Night-firing exercise conducted by Vulcaneers at Fort Bragg, North Carolina.

Mass parachute drop from C-141's conducted by the Vulcaneers of the 7th Battalion (Airborne) Vulcan, 60th Air Defense Artillery, at Fort Bragg, North Carolina.

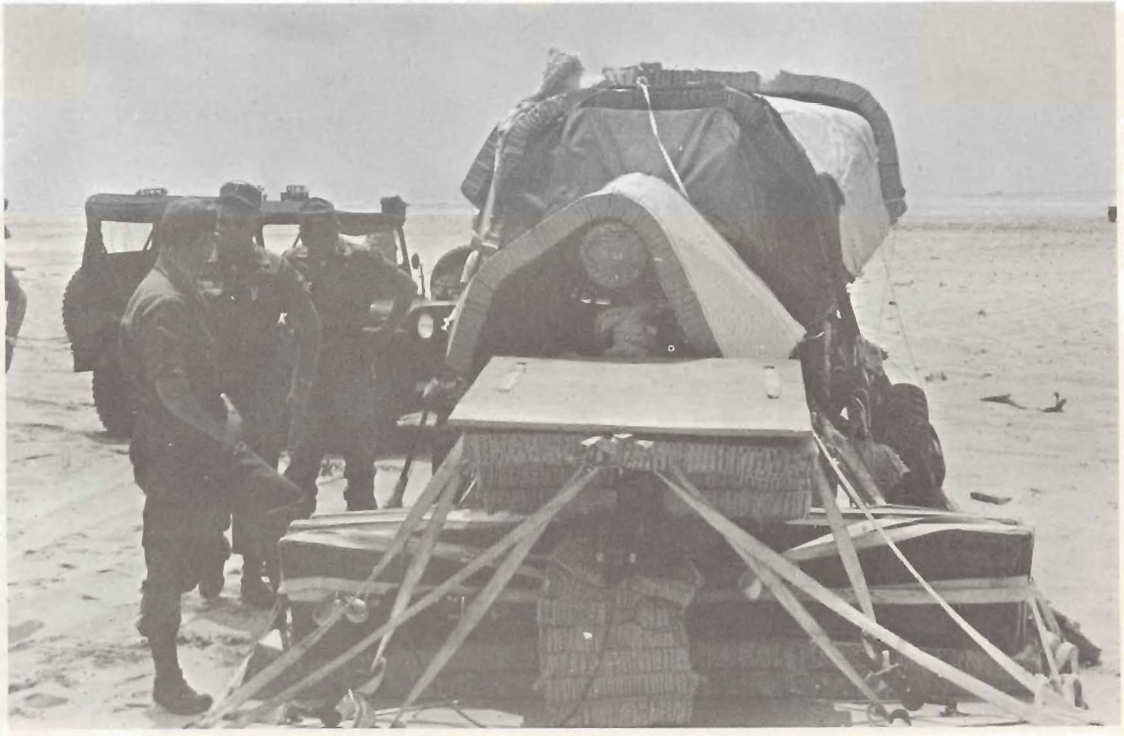

Drop of Vulcan air defense system from C-5A.

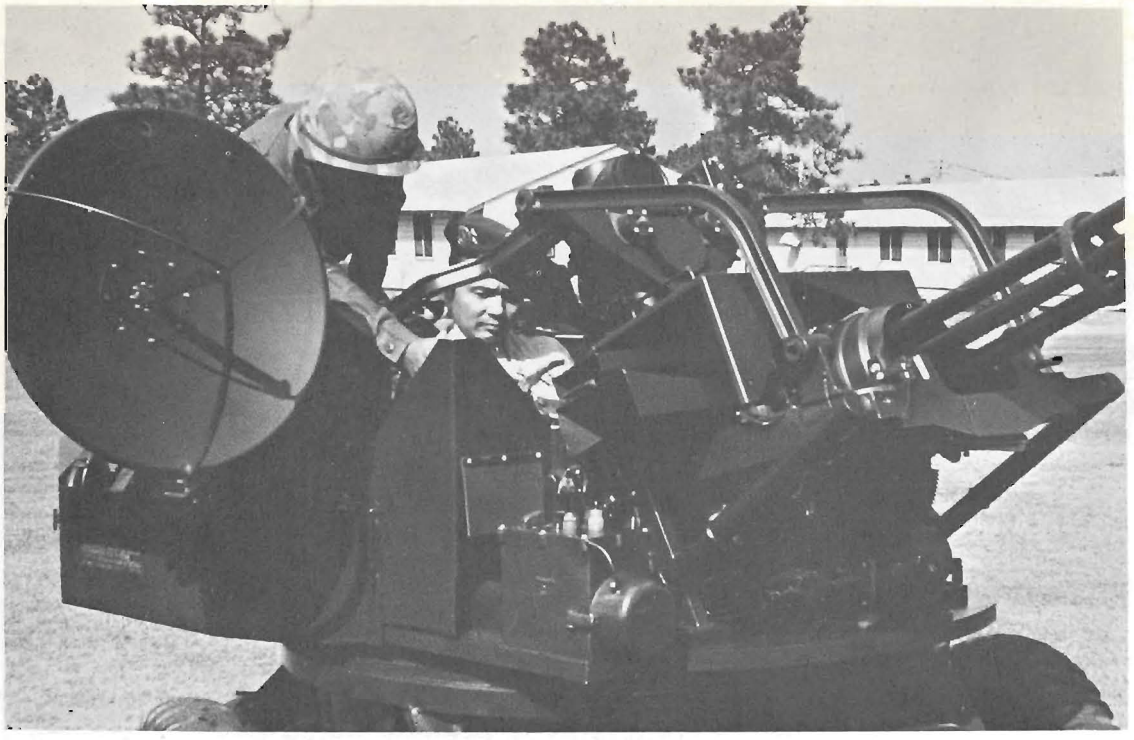

A Vulcaneer demonstrates the Vulcan air defense system to one of many foreign dignitaries visiting the 82d Airborne Division.

A Vulcaneer briefing a foreign dignitary visiting the 82d Airborne Division.

The DACE/BACE system is designed to operate from a small general-purpose tent attached to the tactical operations center of the division or brigade which it is supporting. All operating personnel function from a specially designed table from which they can observe the airspace coordination board. Airspace activities are plotted on the backlighted clear plexiglass board by two back plotters who receive airspace usage information from the functional representatives at the table. The plotters wear headsets which are attached to direct hot lines from each of the representatives. Permanent and semipermanent data are recorded on the front of the board, including ADA fire unit positions, artillery positions, operations overlays, boundaries, corridors, landing zones, and air defense intelligence data. Airspace usage activities data are plotted on the rear of the board, closely monitored, and disseminated to other agencies as required. Possible conflicts between airspace users can be detected immediately, providing for timely resolution.

The return of the air defense artillery to the field army has given much-needed combat power to the line divisions. The All American Division has capitalized on this new capability and considers the ADA as a most welcome addition to the division. By developing the antiair package and a functional airspace coordination system, the 82d's air defense artillery may be instrumental in the eventual formulation of Joint Service Doctrine related to airspace coordination and the air defense of ground combat forces. The 7th Battalion (Airborne) Vulcan, 60th Air Defense Artillery, has truly earned the right to wear the patch of America's Guard of Honor.

1st of 44th Stands Down in Vietnam

One of the two remaining air defense artillery battalions in Vietnam, the 1st Battalion, 44th Artillery, stood down in November 1971 at Red Beach, Da Nang, Republic of Vietnam. The battalion was part of the XXIV Corps Artillery.

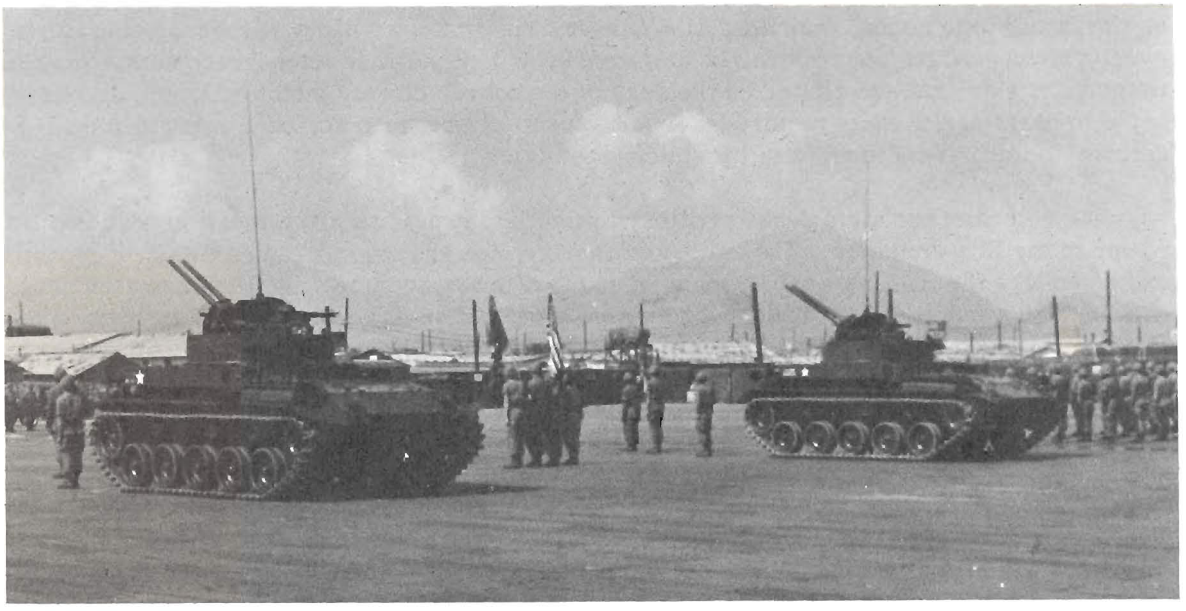

The 1st Battalion, 44th Artillery, during standdown ceremony at Red Beach, Da Nang, Republic of Vietnam. The Dusters were part of the unit's equipment for 4 of the 5 years the battalion spent in Vietnam.

It was 5 years to the day that the 1st Battalion, 44th Artillery, arrived at Qui Nhon for duty in the Republic of Vietnam on 6 November 1966. During this time the battalion performed all its assigned combat support missions with marked gallantry, courage, and distinction.

The 1st of the 44th was organized in 1899 and was designated as Battery O, 1st Artillery. During the course of the next six and one-half decades, the unit has been redesignated, inactivated, activated, disbanded, and reconstructed several times. When it was activated at Fort Bliss on 1 March 1966, the battalion consisted of a headquarters and headquarters battery and four firing batteries. It was designated as an automatic weapons, self-propelled battalion. Battery G, 65th Artillery (a machinegun unit), was attached. The battalion was deployed to Vietnam on the USNS Gaffney. When the unit arrived in Vietnam, it was placed under control of the III Marine Amphibious Force at Da Nang. The unit participated in all the major campaigns conducted in Northern Military Region I. It was stationed at Dong Ha Combat Base, I Corps Tactical Zone, for deployment in areas from the Laotian border east along the demilitarized zone and south to Phu Bai. It participated in Operation Pegasus which broke the seige of Khe Sanh. The task force was led into Khe Sanh by elements of Battery C on 15 April 1968. Also, during the TET Offensive of 1968 the battalion defended the Quang Tri Compound which was attacked by an estimated division of NVA with sappers. For its courageous action, the unit was presented the Presidential Unit Citation and the Valorous

Unit Citation. The unit was assigned to XXIV Corps Artillery on 20 May 1970. The battalion participated in all major campaigns of XXIV Corps Artillery to include Lam Son 719, 720, and 810.

Due to constant redeployment and inactivation of units in the Republic of Vietnam, the 1st of the 44th began standing down batteries early in 1971. Batteries A, C, and D; Battery G (Searchlight), 29th Artillery; and Battery G (Machinegun), 65th Artillery, had all stood down by 1 November 1971.

The battalion was commanded by LTC Glenn K. Matsumoto of Washington, D.C., and the senior NCO was CSM James A. Wiley of Olney, Illinois.

Operational Lessons Learned

EXPERIENCES OF DEPLOYED UNITS

Intelligence and Security

Military planners tend to reduce intelligence assets in direct proportion to reduction of combat forces when contact with hostile forces diminishes. This is a dangerous practice. In an insurgency environment, departure of friendly combat forces from an area of operations leaves an information gap that may require additional intelligence activity to fill. The loss of combat troops as sources of information should be replaced by increased emphasis on source nets, contact with local residents, refugees, civilian agencies, and placement of controlled agents. Military planners should consider the need for increased intelligence coverage when friendly troops are withdrawn from a tactical area of operations.

—DA Pam 350-15-14

Physical security surveys of 38th ADA Brigade facilities are presently being conducted by the Provost Marshal (Camp Humphreys). These surveys were recently initiated and will continue for several months. Primary emphasis is upon security of administrative areas to prevent pilferage. Increased emphasis is being placed on more timely and accurate incident reporting. Emphasis is being placed on the need for liaison among all surrounding Republic of Korea (ROKA), Korean National Police (KNP), and Homeland Defense Reserve Force (HDRF) units for timely incident reporting. The Eighth US Army was contacted in obtaining cooperation from ROKA and KNP headquarters.

Personnel

The limited supply of experienced senior maintenance personnel in many battalions of the 38th ADA Brigade has caused hardship. A short-tour area needs experienced maintenance people in the system at all times to provide continuity in maintenance management. One battalion experienced the loss of a large proportion of its senior maintenance NCO's due to the buildup of personnel during one short period of time. Turnover of experienced senior maintenance personnel should be monitored more closely. A constant turnover of only a small percentage of senior maintenance personnel will insure proper continuity and efficient maintenance management in a short-tour area. A 1-month overlap of senior NOC's would be ideal.

Construction of Protective Buildings

Because of increased North Korean infiltration attempts and intelligence indicating a possible attack on one or more isolated sites, a program of site hardening was initiated. The purpose of the site hardening program was to protect personnel and vital air defense equipment from small arms fire and flying metal fragments. The program was also designed to give limited protection to equipment when attacked by enemy air strikes.

Experiments were conducted with many types of bunkers and revetments. Fifty-five gallon drums were placed in a horseshoe shape around the launchers and filled with sand. The barrels were then sandbagged four-deep to a height of 5 to 7 feet. Another experiment was conducted using cement blocks in the form of a horseshoe around launchers and radars with earth piled against them. A roof was placed over the top of the walls around radars, slanted to allow for runoff, and positioned so as not to interfere with the movement of the antenna. The roof was sealed by placing removable plywood sections and canvas around the radar antenna base. A door was built across the open end of the structure, sealing the building and permitting easy access to and from the radar. Sandbags were placed four-deep around the outside of the building. This type of revetment has two advantages. It provides protection for the cabinet of the radars, which holds the majority of the electrical components, and provides protection which allows maintenance personnel to work on the radars during inclement weather. Cabinets may be opened in wet weather without water reaching the equipment. Heat generated by the radar will provide warmth in the building during the winter months. Electrical outlets and lighting fixtures may also be installed in the building.

Site hardening programs should be expedited through systematic construction of protective buildings. Engineering support organizations could be tasked with the requirement of developing standardized construction plans based on the item of equipment to be protected, the types of material most readily available for use in construction, and the degree of protection desired for both personnel and equipment.

Air Defense Training

Air defense exercises continue to become more successful, and the training gained from them is of significant value. Each week the Air Force provides sorties to fly air strikes against tactical sites. Batteries are brought to "Blazing Skies" and conduct simulated engagements of the aircraft. The pilots are instructed to attack the site in the same manner as they would if they were on actual air strikes. They also practice missile evasion tactics after the simulated release of their ordnance. The training is particularly beneficial to the continuous-wave acquisition radar operators because they are provided live, high-speed, low-altitude targets. With the cooperation of the Direct Air Support Center assigned to I US Corps (GP), a forward air controller (FAC) is sent to each tactical site to control the aircraft. Because the aircraft are under positive ground control by the FAC, the problems presented by the NO FLY Line are eliminated.

March Order Training

Training on equipment march order and convoy procedures has been conducted in conjunction with state VII time. Operational and fragmentary orders are put into effect, and

battalion commanders and members of the staff are on site to evaluate and detect problem areas. The exercise includes a complete march order of all tactical equipment and a 5-mile road march using correct convoy procedures. A program such as this insures that a battery move is not limited to an annual affair. Shortcomings and mistakes detected during the exercise are corrected immediately. The exercise also insures that the knowledge and organization required to move a battery is passed on smoothly to new personnel as they arrive both in the battery and the battalion.

Resistors

Across

2. The wattage rating of a resistor does not affect the amount of _____ in the circuit.

4. _____ composition resistors are designed for low-current circuits.

5. Typical resistance and power dissipation values for a carbon resistor are 100,000 ohms and 1 _____.

6. A 100,000-ohm resistor with ±10-percent tolerance can have a resistance 10 percent _____ the coded value.

8. Variable carbon resistors are commonly used in the power on-____ switch and volume control of a radio receiver.

9. The ohmmeter is used to _____ resistors.

11. Wirewound resistors have values down to a fraction of an _____.

12. Another name for potentiometer.

15. The wattage rating must be sufficient to avoid _____ heat in the resistor.

16. Power ratings of resistors are not part of color coding but may appear in _____.

17. One of the two main types of resistors.

Down

1. A variable voltage divider with three terminals.

3. When resistors are combined, the _____ power rating is the sum of the individual wattage values.

4. Code that indicates resistance value.

7. _____ ratings of carbon resistors depend mainly on their physical size.

10. Carbon resistors can be _____ for a higher wattage rating.

13. Carbon resistors have tinned copper _____ for soldering the resistor connections into a circuit.

14. The most common trouble in resistors is an _____.

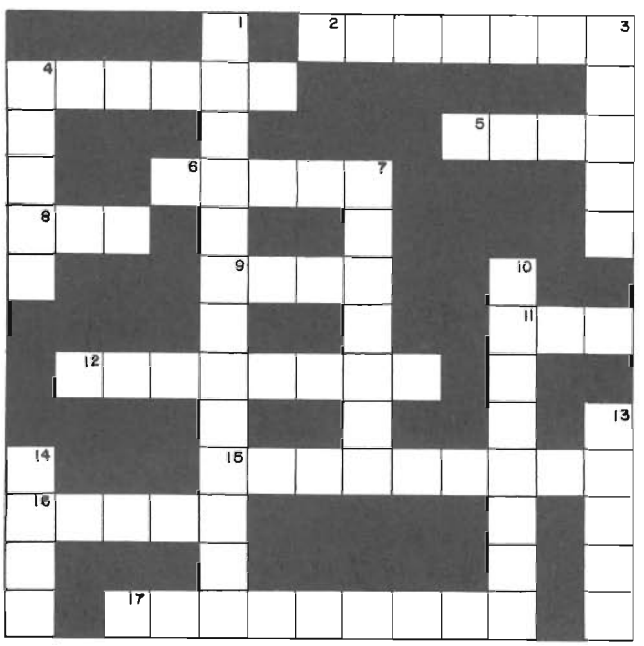

Answers on page 102.

Movement of Mobile Homes

Would you believe that it might be easier to get a "vehicle" to orbit the moon than it is to move an oversize mobile home from coast to coast? This extreme comparison seems to come closer to the truth with each passing year as mobile homes become bigger while state laws concerning their movement remain rigid.

Additionally, once in a new location, mobile home owners should be aware that they can be foiled in their efforts to sell if their trailers do not conform to state codes. California is a good example of a state with extensive regulations governing mobile homes. A person might easily find himself unable to sell or even live in a mobile home in California if it does not measure up to the safety and sanitary standards prescribed by that state.

While most mobile home owners will probably experience little difficulty in movement of their trailers on their next change of station, a trip to the local transportation office could help preclude unnecessary difficulty. Ask for latest information concerning state laws governing such matters as permissible lengths and widths, and a permit for movement by highway.

Reader's Corner

CURRENT BOOKS AND ARTICLES OF MILITARY INTEREST

This list is published to draw attention to worthwhile and informative books and articles in other publications. We realize that not all items will be available to all readers. Our motive is to be helpful to as many readers as possible.

The content of these publications does not necessarily represent the opinion of the US Army Air Defense School.

—Editor

BOOKS

Computer Applications in the Behavioral Sciences by Harold Borko, ed. Prentice-Hall, Englewood Cliffs, NJ.
"The chapters of this book provide a demonstration by example—far more persuasive than any exhortation—of the vital role that computers have already assumed in psychological research."

The Thousand-Mile War by Brian W. Garfield. Doubleday, Garden City, NY.
"The first full-scale history of this critical struggle [The Aleutian Islands Campaign] which provided a microcosmic view of the entire global conflict in the variety of its military operations; and in tracing its details, the author goes beyond the standard historical statistics to follow the campaign through the eyes of the people who were actually there."

Computers in Higher Education; Report of the President's Science Advisory Committee by The White House, Washington, D.C.
"The report is divided into four main sections. The first is primarily concerned with computers and undergraduate education. The second considers education in computer science. The third discusses the interaction between research and educational use of computers. The fourth comments briefly on computers and secondary education."

Programmed Learning Aid for Introduction to Data Processing by C. Orville Elliott. Learning Systems Co., Homewood, IL.
"This programmed learning aid was developed to provide students with a means of self-review of the techniques and ideas most often presented in introductory courses in business data processing."

A White House Diary by Claudia Alta Johnson. Holt, Rinehart, and Winston, New York.
"While the [Lyndon Johnson] Presidency and affairs of state comprise much of A White House Diary, it is essentially the story of a wife and mother, managing the busiest household in the world—from the details of moving to a new home to the emotional adjustments of her family as it faces the responsibility of being the nation's First Family."

ARAMCO Handbook, Oil and the Middle East by Arabian Oil Co.
"In order to describe the ARAMCO venture in perspective, an unusual range of topics must be covered in the pages of this handbook: the history, culture, geography, religion, and economic development of Saudi Arabia; the fundamentals of the oil industry; ARAMCO's early history and its present operations."

Area Handbook for Oceania by John W. Henderson and others. US Government Printing Office.
"An effort has been made to deal with the major political, social, economic, and military trends of [this South Pacific island] area."

Basic Programming by Van Court Hare. Harcourt, Brace, and World, New York.
"This book provides an introduction to computer programming by means of BASIC, a simple language developed at Dartmouth College and consisting of only a few rules of grammar and a vocabulary of fewer than twenty words."

Area Handbook for the Soviet Union by Eugene F. Keefe. US Government Printing Office.
"In essence, this handbook is an attempt to explore and expose the pertinent aspects of the system that will lead to a better understanding of internal and international Soviet affairs."

Russia On Our Minds by Delia Kuhn. Doubleday, Garden City, NY.
"Are Americans and Russians basically the same kind of people? Are the two nations slowly converging in their essential interests? Can they live in peace? Haunted by such questions, Delia and Ferdinand Kuhn went to the Soviet Union to find out for themselves."

Technician Training by John R. Brydle. Brydle Associates, Princeton, NJ.
"This book is designed for newly appointed instructors, course developers, and training managers who have no background in instructional technology."

ARTICLES

"Air Defense: Weakest Link in the Deterrent Chain," Edgar E. Ulsamer, Air Force and Space Digest (December 1970), pp. 35-39.
"For nearly a decade, the US has relied on assured destruction—achieved largely by US missile superiority—as a deterrent to nuclear war. One element of the deterrent forces—air defense—has been increasingly left out in the cold."

"Frontier Replica," Donald S. Spencer, Army Digest (December 1970), pp. 20-22.
"Tucked into one edge of the million-acre [Fort Bliss] reservation, the Replica Museum is a visual reminder of the role of the post when Indian arrows were the only missiles soldiers faced."

"Laser—a Weapon Whose Time Is Near," John L. Frisbee, Air Force and Space Digest (December 1970), pp. 28-33.
"Now laser technology has matured to a point where its entry into the arsenals of the US, the USSR, and several other countries must be rated as imminent."

"The Evolution of Air Defense in Allied Command Europe," NATO'S Fifteen Nations (April-May 1971), pp. 69-74.
"Vigilance is the keynote of air defense in Allied Command Europe today. Air defense forces maintain a constant alert, day and night, in all weather conditions, and thereby make a vital contribution to the NATO principle of deterrence."

"The Question of an All-Volunteer U.S. Armed Force," Congressional Digest (May 1971), entire issue.
This issue describes the evolution of US manpower procurement in America, followed by a description of how the system now operates along with the proposed volunteer system. Following this, prominent government people discuss whether the proposed conversion to the all-volunteer system is sound national policy.

"China's Military: A Growing Political Force," Ralph L. Powell, Air Force Magazine (June 1971), pp. 43-47.

"Beyond their sizable forces and improving weaponry, the political influence of Communist China's military establishment is of major growing importance. The Communist dogma that 'the gun must never be allowed to command the Party' has been severely strained since 1967."
"Magnetic Bubbles," Andrew H. Bobeck and H.E.D. Scovil, Scientific American (June 1971), pp. 78-90.
"A magnetic material is divided into regions that are magnetized in different directions. These domains can be formed into small 'bubbles' that can be utilized in a new kind of computer memory."

"Standard and Guardian," John Edgar Hoover, Personnel Guardian (May-June 1971), pp. 4-7.
The head of the FBI explains some of the problems faced by the FBI, the staggering cost of crime, sources of optimism and progress in law enforcement, the high standards of people in this organization, and their continuous search for improvement.

"The United States, the Soviet Union, and Strategic Considerations in the Middle East," Edward R. F. Sheehan, Naval War College Review (June 1971), pp. 22-30.
"Written from the unique perspective he has gained as both a journalist and embassy official in the Middle East since 1956, Mr. Sheehan presents a thought-provoking perspective of today's political dilemma in that part of the world."

"National Suicide?" Ernest Cuneo, Ordnance (May-June 1971), pp. 536-538.
"While our country is being weakened by Communist propaganda, far greater damage is being caused by those US citizens who are undermining military morale and the national will to resist."

"The Growing Soviet Naval Presence in the Caribbean: Its Politico-Military Impact Upon the United States," Jack L. Roberts, Naval War College Review (June 1971), pp. 31-41.
"The article focuses on the significance of increased Soviet military presence in this area as it relates both to American security interests and the wider area of world politics."

"Ultrasonics in Communications," K. D. Bowers, Bell Laboratories Record (May 1971), pp. 139-145.
"Ultrasonic waves resemble sound waves, but they extend far above the audible range of frequencies. Through confinement of such waves within a crystal, glass, or metal structure, they can be made to perform a number of useful operations for electronic circuits."

"Where Is the Enemy?" Robert M. Herrick, Army (June 1971), pp. 46-51.
"To fight the enemy in Vietnam, you sometimes must find him. The best source of information on his whereabouts can be the enemy himself. A skillful POW interrogator may use map-tracking as a means of locating enemy units, even in remote jungle areas."

"Gun or Guided Weapon?" J. S. Weeks, Ordnance (May-June 1971), pp. 552-555.
"While the guided missile offers great range and mobility and the gun can fire several types of shell with high-kill probability, no exclusive choice of one over the other should be made as yet."

ANSWERS TO CROSSWORD PUZZLE

Across		Down	
2.	current	1.	potentiometer
4.	carbon	3.	total
5.	watt	4.	color
6.	below	7.	wattage
8.	off	10.	combined
9.	test	13.	leads
11.	ohm	14.	open
12.	rheostat		
15.	excessive		
16.	print		
17.	wirewound		

INDEX

AIR DEFENSE TRENDS

An index of all issues of Air Defense Trends for the previous year will be published in the first issue annually. This index covers the year 1971.

January 1971

ARTICLES — Page

Air Defense Missiles for the Army 22
ASP - Who Needs It or "What Price Emotionalism" 36
The Munroe Doctrine or How to Hit With Vulcan 37
Education: Eternal Enrichment 40
A Plan to Help Establish an All-Volunteer Armed Force 41
Excalibur Air Defense System 45
Soviet Military Industrial Complex 51
History of Air Defense 60
Tow Banner Bullet Scoring System 69
Air Defense System Effectiveness and Kill Definitions 74
System Engineering Air Defense School Courses 80
Early Warning for Forward Area Weapons 84

SHORT SUBJECTS

If It's Not Definitely Wrong, It's Probably Right 32
Letters to the Editor 7
Lessons Learned in Vietnam 89
Parallel Circuit Characteristics 91
Reader's Corner 92
Index of 1970 Publications 97
Aircraft Recognition 104

NOTES

US Army Air Defense School 10
- Air Defense Artillery Training Films
- Revision of TM 9-1410-550-34/12
- Chaparral Hydraulic Problem
- Air Defense Artillery Briefing Team
- How the Nonresident Instruction Department Assists the ADA Officer in His MAAG Assignment

US Army Air Defense Center and Fort Bliss 17
- Redeye Personnel
- Interim Change to AR 135-215
- Airborne Vulcan

Page

US Army Air Defense Board 19
Ballistic Aerial Target System (BATS)
Check Test of Improved Hawk Maintenance Package

Human Resources Research Organization 21
Methods of Training for Engagement of Aircraft
With Small Arms
Auditory and Visual Tracking of a Moving Target

June 1971

ARTICLES

Page

Certified Round Cost Effectiveness 38
The Chaparral/Vulcan Activation and Training Program 39
Crotale—France's Answer to Low-Level Aerial Attack 42
The Negro Soldier, Yesterday and Today 56
SAM-D—Technology of a Modern Air Defense System 66
The Airmobile Air Defense Artillery Battalion 75
History of Air Defense 80
To Shoot or Not to Shoot 89

SHORT SUBJECTS

Did You Know 32
Formal Education Programs for Career Officers
Enlisted Personnel Management
Standard ARM Is Tested on F-4D, F-105 54
Operational Lessons Learned 93
Network Theorems 96
Mailing of Drugs and War Souvenirs May Violate
Laws and Regulations 97
Sailors Take Vulcan Training 98
Reader's Corner 99
Aircraft Recognition 106

NOTES

US Army Air Defense School 12
Alternate Acquisition Radar
Training Literature Report
Guided Missile Systems Officer Course
New Air Defense Artillery Correspondence Courses
for Enlisted Personnel
Fire Distribution System Terminology

Page

US Army Air Defense Center and Fort Bliss 21
Improved Hawk Contracts Awarded
New Computer System Installed
Explosive Ordnance Disposal

US Army Combat Developments Command 24
Doctrine
Organization
Materiel
Newsletter Service
Revision of FM 44-1

US Army Air Defense Board 27
Air Defense Command, Control, and Coordination System (ADCCCS) AN/TSQ-73
Site Monitor

Human Resources Research Organization 30
Methods of Training for Engagement of Aircraft With Small Arms
Auditory and Visual Tracking of a Moving Target
Aircraft Recognition Performance of Crew Chiefs With and Without Forward Observers
Equipment-Device Task Commonality Analysis and Transfer of Training
Development and Evaluation of an Improved Radio Operator Course (MOS 05B20)
An Experimental Program of Instruction on the Management of Training

October 1971

ARTICLES Page

How to Hit With Vulcan—A Response to the "Munroe Doctrine" 25
Did You Know? 30
Air Defense Communications—Where Does It All End? 39
A New Look for Chaparral/Vulcan Battalions 47
A Report on the German 20-mm Twin Gun 54
Career Advancement Through the Noncommissioned Officer Education System (NCOES) 58
History of Air Defense 65
The Oerlikon-Contraves 35-mm AA Tank 76
Nike Hercules Surface-to-Surface Battery 82
Air Defense System Program Review 89

Page

SHORT SUBJECTS

Major General Shoemaker Assumes Command of Fort Bliss v
Change of Command (German Air Force Training Command at Fort Bliss) vi
Message From The Commandant vii
Editorial ix
Cover Story 1
Blueprint for MVA 6
Letters to the Editor 7
4F-1181 Course 29
Credit to Vulcan 36
U.S. Army Air Defense Guided Missile Lore 42
MERDC Uses Waste Heat for New Air Conditioner 64
INFANT 79
Laser Rangefinder 81
Operational Lessons Learned 93
Conductors and Insulators 96
Reader's Corner 97
Shades of Meaning 105
Aircraft Recognition 106

NOTES

US Army Air Defense School 11
- Air Defense Artillery Training Films
- Divisions Air Defense Officer
- Chaparral Hydraulic Test
- Hawk Maintenance Shop Cathode-Ray Tube
- Vulcan Test
- Electronics Instruction
- New Electronics Course

US Army Air Defense Center and Fort Bliss 19
- Chaparral/Vulcan Training Conversion Reduces Cost of Course
- Adjustments in ARADCOM Structure

US Army Combat Developments Command 21
- Doctrine
- Troop Test
- Studies

Human Resources Research Organization 23
- Division No. 5 Report

DEPARTMENT OF THE ARMY
COMMANDANT
US ARMY AIR DEFENSE SCHOOL
ATTN: ATSAD-DL-D
P.O. BOX 5600
FORT BLISS, TEXAS 79916

OFFICIAL BUSINESS
PENALTY FOR PRIVATE USE, $300

POSTAGE AND FEES PAID
DEPARTMENT OF THE ARMY

U.S. MAIL

Commandant
US Army Air Defense School
ATTN: ATSAD-DL-D
P.O. Box 5600
Fort Bliss, Texas 79916

Cut out, fold on dotted line, seal on three edges with tape, and mail. No postage is necessary.

CHANGE MAILING ADDRESS

OF _____ _____
(Name of unit or office) (Date)

FROM _____

TO _____

☐ INCREASE ☐ DECREASE

Distribution of Air Defense Trends to _____
(Name and address
_____ by _____ copies.
of unit or office)

Readers are invited to submit for publication articles and informative notes that are of professional interest to the air defense artilleryman. Articles should be current and forthrightly stated and should relate to some aspect of what air defense units in the field are doing to accomplish their mission, particularly in the technical and tactical areas. Miscellaneous articles expressing either technical or nontechnical ideas that may be of value to air defense will also be considered for publication.

Direct communication to the editor is authorized:

Office of Doctrine Development, Literature, and Plans
US Army Air Defense School
P.O. Box 5600
Fort Bliss, Texas 79916
Telephone 915-568-2493
AUTOVON 978-2493

Aircraft Recognition

Here are multi-image and flash cards of three more airplanes to add to your aircraft identification collection.