AIR DEFENSE TRENDS

US ARMY AIR DEFENSE SCHOOL
Fort Bliss, Texas 79916

OCTOBER 1972

AIR DEFENSE TRENDS
US ARMY AIR DEFENSE SCHOOL
Fort Bliss, Texas 79916

IN THIS ISSUE

Page

Cover 1
US Army Air Defense School 2
US Army Air Defense Center and Fort Bliss 2
1st Advanced Individual Training Brigade (Air Defense) 3
11th Air Defense Artillery Group 3
Headquarters Command 3
Range Command 3
US Army Air Defense Board 3
US Army Combat Developments Command Air Defense Agency 3
US Army Air Defense Human Research Unit, Human Resources Research Organization 3
Air Defense Trends 4
Air Defense Trends Editorial Staff 5
Letters to the Editor 6

USAADS NOTES
Office of Doctrine Development, Literature, and Plans 9
Missile Electronics and Control Systems Department 12
Nonresident Instruction Department 14

NOTES FROM US ARMY AIR DEFENSE CENTER AND FORT BLISS 15

NOTES FROM THE US ARMY AIR DEFENSE BOARD 17

NOTES FROM THE HUMAN RESOURCES RESEARCH ORGANIZATION 18

AIR DEFENSE ARTILLERY EQUIPMENT FOR AIR TRAFFIC REGULATION? 19

AIR DEFENSE UNITS IN STRAF TRAINING 24

GROUP STUDY—A UNIQUE TRAINING TECHNIQUE 26

DEFENSE/FLAK ANALYSIS 30

REALISTIC TRAINING DEVICES FOR FORWARD AREA AIR DEFENSE WEAPONS 36

MANUAL AADCP FOR REDEYE 39

VIDICON 42

52379

Page

US MILITARY ACADEMY PREP SCHOOL 44

DID YOU KNOW? 46

WHAT DO YOU SUPPOSE HE MEANT BY THAT? 53

AIR DEFENSE CENTER TEAM MINUTES 57

SOME LINES ABOUT A LINE 73

MANPOWER AND RESERVE AFFAIRS 76

IMPROVED HAWK 79

NIGHT VISION 85

BATTERIES 88

READER'S CORNER
Current Books and Articles of Military Interest 89

AIRCRAFT RECOGNITION 96

Air Defense Trends is an instructional aid of the United States Army Air Defense School; it is published when sufficient material of an instructional nature can be gathered.

The argument for weakness, weakness whether it's military, economic, or in any field, wears two masks. Let's look at them for a moment—look right through those masks.

There are those who attack the necessity of strength with the claim that armaments cause conflict; the very fact that a nation is armed; that causes war. Well, the reverse is true. It is conflicts of vital interest which cause nations to build armaments.

Nothing but patient, firm, hardheaded negotiations . . . can adjust those fundamental differences, and so pave the way for a safe reduction of armaments.

To those who attack the morality of strength with claims that our defense establishment is militarist and evil, we must reply: It is war that is evil, and the vigilance and the strength which prevent war are honorable and good. Let's say that and let's stand for it.

—Richard M. Nixon

Assistant Commandant Retires

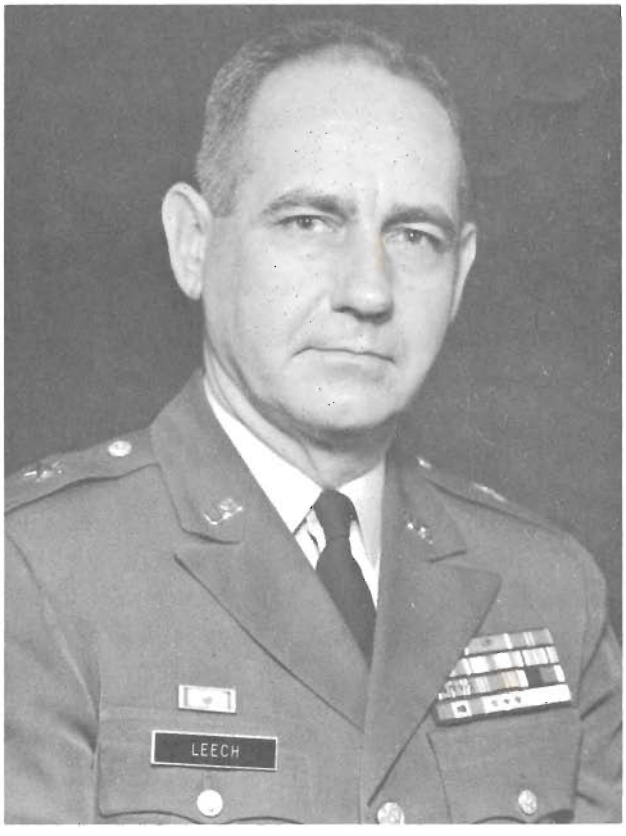

Brigadier General Lloyd L. Leech, Jr. retired on 1 August 1972 after completing 30 years of military service. He had been Assistant Commandant, US Army Air Defense School, since December 1969.

General Leech entered military service in 1942 following graduation from the Virginia Military Institute and commissioning as a second lieutenant of Field Artillery. His military service included combat tours in Europe during World War II and Korea in 1952-1953. During his military career, General Leech completed courses of instruction at the Signal Corps School, Field Artillery School, Command and General Staff College, and National War College. In 1948 he graduated from the University of Illinois with a Masters Degree in Electrical Engineering.

A brigadier general since October 1967, General Leech's awards and decorations include the Legion of Merit with Oak Leaf Cluster, the Bronze Star Medal, the Army Commendation Medal, and the Air Force Commendation Medal.

New Assistant Commandant

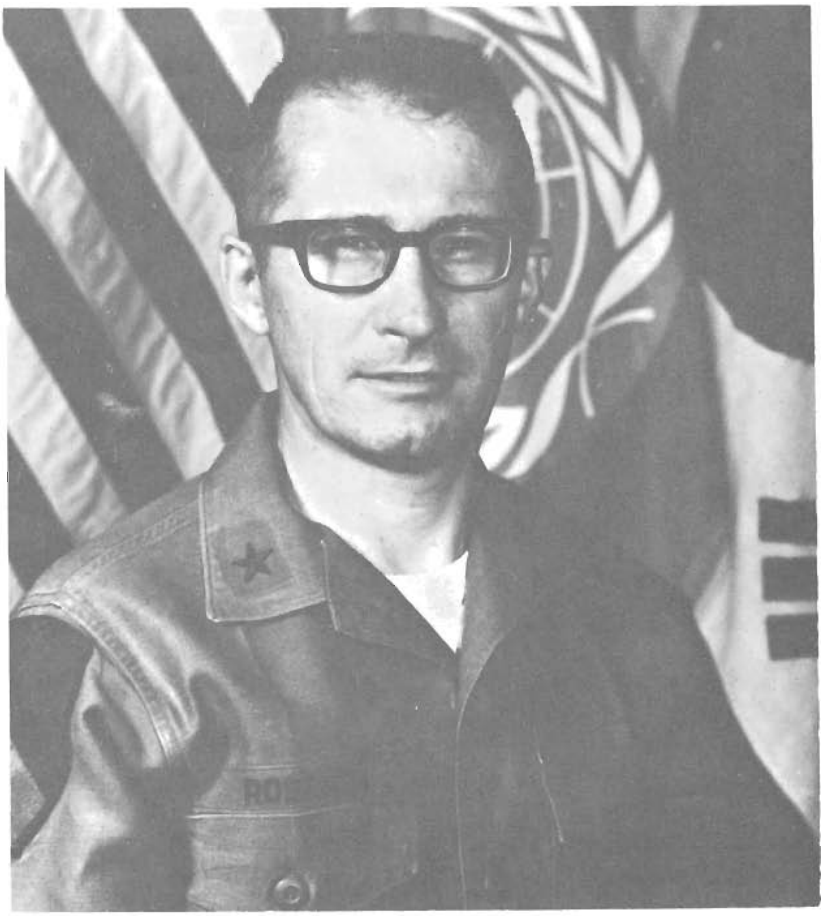

Brigadier General Ernst E. Roberts assumed the position of Assistant Commandant in September 1972 after serving 1 year as Commanding General of the 38th Artillery Brigade (AD). His air defense experience dates from the late 1950's and includes an impressive variety of assignments. A native of West Virginia, General Roberts graduated from the US Military Academy in the class of 1949 with a commission in artillery after first studying mechanical engineering for 2 years at the University of West Virginia. Since graduating from West Point he has attended the Ground General School at Fort Riley, Kansas; the Artillery School, Fort Sill, Oklahoma; the University of Southern California, where he earned a masters degree in Engineering; the Command and General Staff College; and the Air War College, where he was designated a distinguished graduate. General Roberts served in Korea during 1950-51 where he engaged in six campaigns. His decorations include the Silver Star, Legion of Merit, Meritorious Service Medal, Army Commendation Medal with Palms, Korean Presidential Unit Citation, and service medals.

Third Cavalry Comes to Fort Bliss

The 3d Armored Cavalry Regiment, consisting of 2,600 troops, has moved to Fort Bliss, Texas, from Fort Lewis, Washington. The move marks the first time since 1943 that a cavalry unit has been stationed at Fort Bliss. The regiment's cavalry unit will be stationed on the main post and its air cavalry troops will be stationed at Biggs Army Airfield.

The 3d Armored Cavalry, which has a reconnaissance and light attack mission, brought 313 tracked vehicles, 304 wheeled vehicles, and 49 aircraft to Fort Bliss. Among these were tanks with surface-to-surface missiles, armored personnel carriers, armored vehicle launch bridges, self-propelled howitzers, and mortars, as well as a variety of helicopters.

Relocation of the 3d Armored Cavalry Regiment requires new firing ranges for tank training, which will be established on the Fort Bliss Military Reservation. Maneuver areas and close-in training areas will be northeast of Biggs Field.

COVER Dynamic training is fast becoming a reality throughout the Army as a result of General Westmoreland's action to decentralize responsibility for training management to battalions and separate companies. Inevitably the practices of dynamic training will spread to all Army units and organizations. The practice of involving the trainee in active participation is the main intent of the program. Here we see a soldier thus involved. He is adjusting the Nike Hercules missile tracking radar ranging system himself rather than merely observing a demonstration. One Air Defense Artillery battalion at Fort Bliss has involved its troops in what it calls "Adventure Training." In a recent exercise, several six-man teams made 40-mile back pack hikes into Gila National Forest, New Mexico, to experience living conditions in the wilderness and to practice survival techniques. An engineer company, also from Fort Bliss, moved men and equipment into the Gila National Forest where they widened and otherwise improved $7\frac{1}{2}$ miles of forest service road and constructed culverts and cattle guards. The enthusiasm with which local troops are responding to dynamic training demonstrates the merit of the program.

US ARMY AIR DEFENSE SCHOOL

Commandant . . . . . Major General R. L. Shoemaker

Assistant Commandant . . . . . Brigadier General Ernst E. Roberts

Deputy Assistant Commandant . . . . . Colonel D. W. Pettigrew, Jr

Secretary . . . . . Colonel F. C. Parker III

Office of Doctrine Development, Literature, and Plans . . . . . Colonel N. R. Haley

The School Brigade . . . . . Colonel W. J. Monyhan

Director of Instruction . . . . . Colonel J. L. Hayden

Command and Staff Department . . . . . Colonel L. D. Overstreet

High Altitude Missile Department . . . . . Colonel A. M. Kolesar

Low Altitude Air Defense Department . . . . . Colonel R. D. Powell

Missile Electronics and Control Systems Department . . . . . Colonel H. S. Pitzer, Jr

Nonresident Instruction Department . . . . . Colonel M. A. DiGennaro

Safeguard Central Training Facility . . . . . Colonel B. Spalding

US ARMY AIR DEFENSE CENTER AND FORT BLISS

Commanding General . . . . . Major General R. L. Shoemaker

Deputy Commander . . . . . Colonel R. A. Mazzucchi

Chief of Staff . . . . . Colonel L. G. Churchill

1ST ADVANCED INDIVIDUAL TRAINING BRIGADE (AIR DEFENSE)

Commanding Officer . . . . . Colonel D. E. Mulligan

11TH AIR DEFENSE ARTILLERY GROUP

Commanding Officer . . . . . Colonel L. B. Bjostad, Jr

HEADQUARTERS COMMAND

Commanding Officer . . . . . Colonel F. M. Bashore

RANGE COMMAND

Commanding Officer . . . . . Colonel E. A. Ericsson

US ARMY AIR DEFENSE BOARD

President . . . . . Colonel W. H. Holcombe, Jr

US ARMY COMBAT DEVELOPMENTS COMMAND AIR DEFENSE AGENCY

Commanding Officer . . . . . Colonel M. J. Small

US ARMY AIR DEFENSE HUMAN RESEARCH UNIT, HUMAN RESOURCES RESEARCH ORGANIZATION

Chief . . . . . Lieutenant Colonel F. D. Lawler

AIR DEFENSE TRENDS

An instructional aid of the United States Army Air Defense School, Air Defense Trends is published when sufficient material of an instructional nature can be accumulated. It is designed to keep air defense artillerymen informed of unclassified tactical, technical, and doctrinal developments because it is essential to national defense that all levels of air defense command be kept aware of these developments and their effect on the air defense posture.

Distribution of this publication will be made only within the School, except for distribution on a gratuitous basis to Army National Guard and USAR schools, Reserve component training and ROTC facilities, and as requested by other service schools, CONUS armies, US Army Air Defense Command, Active Army units, major oversea commands, and military assistance advisory groups and missions.

Qualified individuals may purchase copies of Air Defense Trends at 50 cents a copy from the Book Store, US Army Air Defense School, Fort Bliss, Texas 79916. The form below is printed for convenience in ordering.

When appropriate, names and organizations of authors are furnished to enable readers to contact authors directly when they have questions concerning an article.

Unless copyrighted or syndicated, material may be reprinted provided credit is given to Air Defense Trends and to the author.

Articles appearing in this publication do not necessarily reflect the opinions of the US Army Air Defense School or the Department of the Army.

INDIVIDUAL COPIES

☐ Please forward _____ copies of the _____ 1972 issue of Air Defense Trends. Enclosed is 50 cents for each copy ordered.

SUBSCRIPTIONS

☐ Please enter my subscription for the next (1) (2) (3) issue(s) of Air Defense Trends at 50 cents per issue.

Name _____

Street Address _____

City _____ State _____ ZIP Code _____

Make checks payable to the Book Store, US Army Air Defense School.

AIR DEFENSE TRENDS EDITORIAL STAFF

Colonel N. R. Haley . . . . . Staff Director

Lieutenant Colonel J. T. Hicks . . . . . Chief

W. E. Sanford . . . . . Editor

Captain D. R. Johnson . . . . . Circulation

SP5 G. J. Starkweather . . . . . Illustrator

Terry Carrasco and Genevieve McPherson . . . . . Secretaries

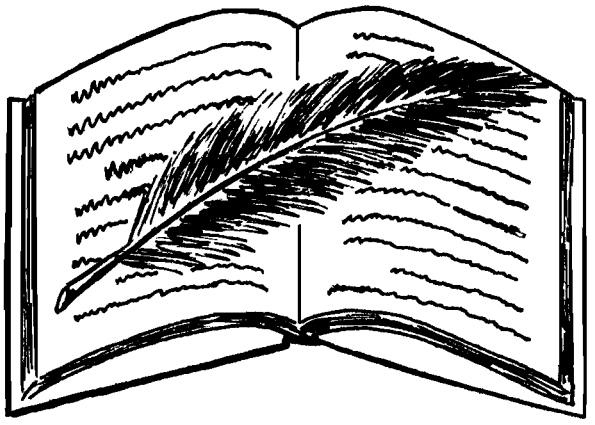

Air Defense Trends seeks your comments on any material published. A different viewpoint or a new line of reasoning may be published to stimulate the exchange of ideas. If you are an authority on a subject, we invite you to write an article and inform our other readers. If circumstances prevent you from writing an article, send in your idea and our editorial staff will assist in developing an acceptable article.

LETTERS

to the Editor

• There appears to be an error in two of the aircraft recognition cards in the September 1970 issue of Air Defense Trends. Card 6 states that it shows the Ka-18 Hog, and card 23 states that it shows the Ka-15 Hen, while FM 44-30, pages 6-141 and 6-142, have the opposite names for the two helicopters. Also, the visual aircraft recognition cards, GTA 44-2-1, June 1970, figures 36 and 38, have their fronts and backs in error.

This apparent error or confusion appeared during a recent operational readiness training test of a 175-mm special battalion when I was using your aircraft recognition cards as flash cards to test the unit's Redeye section.

Can you please tell me which is correct; your cards or FM 44-30? The GTA 44-2-1 cards dispute themselves.

JOE C. MAYFIELD
CPT, FA
Asst S3, HQ, V Corps Arty

FM 44-30 is correct. Card 6 from Air Defense Trends is actually the Hen, and the third item on the back should read, "short, stubby body." Card 23 is the Hog, and the third item on the back should read, "short, box-like body." Recommend pen and ink changes. The backs of GTA 44-2-1 cards 36 and 38 are reversed.

—Ed.

• The article, "A New Look for Chaparral/Vulcan Battalions," appearing in the October 1971 issue of Air Defense Trends states on page 50 that the stabilized master oscillators (STAMO) transmit in the C band. I would point out that the frequency which this office has authorized for the forward area alerting radar is in the D band.

D. B. BERRY
Chief, Frequency Management Office
Directorate of Communications-Electronics
Fort Bliss, Texas

We thank you for your interest and information. Our forward area alerting radar technician states that the system does indeed transmit in the D band.

—Ed.

• Following is a brief summary of the results of our unit's testing with the FAAR system at Headquarters, MASSTER, Fort Hood, Texas. Hopefully, it will provide an encouraging bit of information for all air defenders, especially those presently serving in Chaparral/ Vulcan battalions. The brevity of the report stems from efforts to avoid classification. The report has been approved for release by Headquarters, MASSTER Command, Fort Hood, Texas.

"The first tactical employment of the recently developed forward area alerting radar (FAAR) was witnessed by the 8th Battalion (C/V)(SP), 60th Air Defense Artillery, at Fort Hood, Texas, in February 1972. During testing of the Army's new tricap division (1st Cavalry Division), a FAAR was attached to Battery A (Vulcan) to provide enemy target information directly to the fire units. The results were outstanding. Not only was the FAAR capable of detecting enemy helicopters flying nap-of-the-earth tactics, but it also provided additional information on enemy ECCM attempts. The FAAR transmitted its target information on the unit's command net directly to the Vulcan gunners. The use of the target alerting data display set (TADDS) was not yet available. Even so, the effectiveness of the Vulcan crews was greatly enhanced by the voice relay of the FAAR target data. Future employment of the FAAR/TADDS system with the forward area air defense weapons should effectively close the front line defenses to low-flying hostile aircraft."

RICHARD J. WIEDENBECK
CPT, ADA
Commanding Officer, Btry A, 8th Bn (C/V)(SP)
60th AD Arty

• These may strike a nostalgic note somewhere and bring forth even better remembrances or yarns. To those to whom these are a mystery, I recommend the study of Guided Missile Lore. Meanwhile, who remembers when:

Troops were garrisoned in four-man huts in Logan Heights?

The last troops in Logan Heights had to pick up 823 truck loads of tumbleweeds in the area each year as a fire prevention measure?

The 1st GM Group was firing LOONS and LARKS?

The 36th Air Defense (Missile) Battalion had 120-mm guns? And this battalion trained so long waiting for missile equipment, its enlisted cadre all made warrant officer within a year?

The MAM Department (of HAM, LAM, and MAM) painted the Ajax symbol still seen on building 13?

Red Canyon Range Camp was built? And goldfish were transferred from the lower water tank to the upper, to see if they'd clear the water?

SCR-584 radar men were surveyed for way out ideas—which came true in the M33?

You could watch a V-2 fired from beside a boondock at White Sands?

Ponder Park solved the housing problem? Ditto, Victory Park?

The Oozlefinch name tag was in vogue?

H. FRED DERRICK
Major, USA (Retired)
12608 Cedarbrook Lane
Laurel, Maryland 20810

• Our Nation is unquestionably beset with seriously damaging and chaotic incidents as well as a cancerous growth of socially eroding behavior. Many Americans believe this situation to be Communist inspired. Some do not; and to these I address the contents of a document obtained by Allied forces in Europe in 1919 in which the Communists state their plan for creating a revolution.

1. Corrupt the young, get them interested in sex. Make them superficial; destroy their ruggedness.

2. Get control of all means of publicity, thereby getting people's minds off their government by focusing their attention on athletics, sexy books, plays, and other trivialities.

3. Divide the people into hostile groups by constantly harping on controversial matters of no importance.

4. Destroy the people's faith in their natural leaders by holding them up to contempt and ridicule.

5. Always preach true democracy but seize power as fast and as ruthlessly as possible.

6. By encouraging government extravagance, destroy its credit; produce fear of inflation with rising prices and general discontent.

7. Promote unnecessary strikes in vital industries, encourage civil disorders, and foster a lenient and soft attitude on the part of government toward such disorders.

8. By specious argument, cause breakdown of moral virtues, honesty, sobriety, continence, and faith in the pledged word. And finally, cause the registration of firearms on some pretext, with a view of confiscating them and leaving the population helpless.

We can readily see similarities between this Communist plan for subversion and what is happening in the United States today. Is this coincidental, a reflection of changing values, a Communist plan, or a combination of all three?

LEONARD J. COENEN
LTC, ADA
USAADS

USAADS Notes

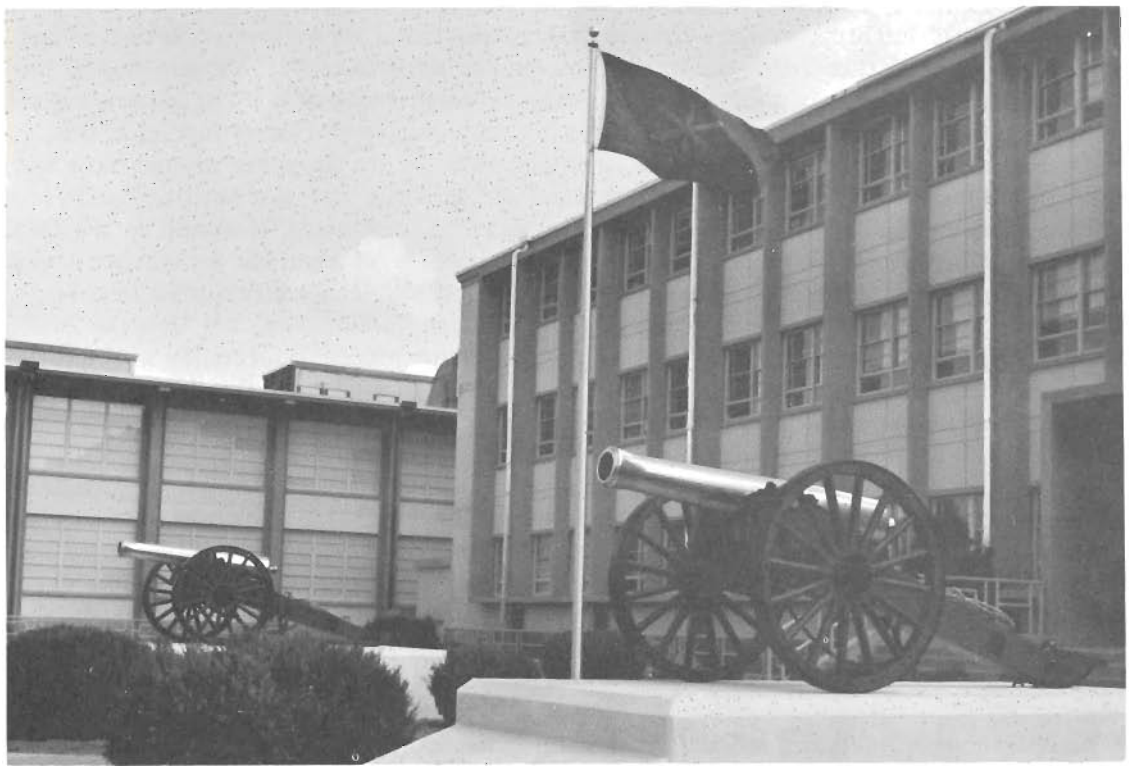

Hinman Hall

This issue of Air Defense Trends has been delayed 3 months as the result of an in-depth review of periodicals conducted by Department of the Army.

OFFICE OF DOCTRINE DEVELOPMENT, LITERATURE, AND PLANS

AIR DEFENSE OF THE TRIDIMENSIONAL BATTLESPACE

The increased use of the airspace over the combat zone by the many friendly combat and combat support elements, and the certainty that the enemy will attempt to prevent our use of this airspace, makes control of it more essential than ever before. Furthermore, the enemy will attempt to make full use of this airspace for his own aerial reconnaissance and airborne assault landings, as well as for launching air strikes on friendly troops and installations. To insure that Army operations are not impaired, the enemy must be denied use of the airspace over and adjacent to the battle zone. Just as the commander must employ forces to block attack and observation by enemy ground elements, he must guard against enemy air assault, aerial observation, and air attack. Consequently, in formulating concepts of operations and organization for combat, Air Defense Artillery must be included in any planned operation to limit the enemy use of the airspace over the combat zone and to control the avenues of approach available to low-flying enemy aircraft. In strategic planning for modern war, the tridimensional battlespace must be considered.

The field army commander having full responsibility for the ground scheme of maneuver is the primary user of the airspace over the battle area, both for air defense as well as for airmobile operations. From the standpoint of the horizontal battlefield, a commander needs a balanced force of infantry, armor, field artillery, and close air support. Having seized the objective, he must then reach out by movements and fires to control the ground and prevent the enemy from counterattacking. The increased importance of control of the airspace over the objective requires that the commander not only employ the above forces against ground elements, but he must now employ Army air vehicles (to suppress ground fires and give increased mobility to ground troops), tactical air, and Air Defense Artillery units to extend his sphere of influence and control the airspace. Accordingly, it should be his decision to request US Air Force close air support in the battle area, and his decision to accept less than optimum air defense if necessary for protection of friendly aircraft by imposing weapons hold (hold fire) in a supported area. If proper use is achieved, Air Defense Artillery units can limit enemy aerial observation and destroy enemy airborne forces as well as low- and medium-altitude enemy aerial attackers. Destruction of high-altitude aircraft can be achieved by a combination of interceptors and long-range Army Air Defense Artillery missile systems.

To achieve this control of the airspace it is essential that the senior commander emphasize the requirement for adequate means at his disposal. In modern Army warfare the commander cannot depend on other friendly military services or allied forces to deny the enemy use of the airspace over the battle zone. He must, therefore, plan to assist in the denial of enemy use of the airspace over the battle zone and, in many instances, accomplish this task with his own resources; i.e., his assigned and attached Air Defense Artillery units.

To achieve sound planning and realistic training for future hostilities, commanders and staffs at all levels must continually and realistically consider the tridimensional threat and the need for Air Defense Artillery in all operations. It is, therefore, essential that:

- Instruction at all service schools, and all Army training circulars, texts, and field manuals dealing with this subject, include and emphasize the tridimensional aspect of the battlespace and the necessity of planning the control of aerial approach corridors available to the enemy.

- All service schools teach operations under various conditions of enemy threat; i.e., that Army operations will be required prior to the time that the air battle is won and the enemy air force so weakened as to pose no significant threat to these operations.

- Air Defense Artillery play be included in all future field exercises, command post exercises, and wargaming.

- Programs of instruction at Army service schools include instruction on the capabilities and employment of the latest Air Defense Artillery equipment and all-arms air defense weapons.

- Air Defense Artillery be provided in all troop lists as an essential element of balanced forces to be used in tridimensional warfare.

TRAINING LITERATURE REPORT

Here is a list of Department of the Army training literature that is being produced at the US Army Air Defense School and should be printed and distributed during the first half of fiscal year 1973:

FM 23-17A, (C) Redeye Guided Missile System (U), Mar 69 (Change).

FM 44-1A, (SRD) US Army Air Defense Artillery Employment (U), Oct 69 (Revision).

FM 44-1-1, US Army Air Defense Artillery Operations, Oct 69 (Change).

FM 44-9, (C) Air Defense Artillery Fire Distribution System AN/TSQ-51 (U), Aug 67 (Revision).

FM 44-19-4, Basic Air Defense Artillery Missileman Examinations (Hawk) (New).

FM 44-99, Procedures and Drills for Hawk Missile Battery (Towed and Self-Propelled), May 69; C1, Apr 70 (Revision).

ASubjScd 23-17, Redeye Gunner and Air Defense Section Training, May 69 (Revision).

ASubjScd 44-4, Forward Area Alerting Radar Crewman Training, (New).

ASubjScd 44-6, Air Defense Artillery Forward Area Alerting Radar Platoon, Jun 69 (Revision).

ASubjScd 44-38, Fire Control Platoon (Nike Hercules), Jun 67 (Revision).

ASubjScd 44-16B10, Advanced Individual Training and Refresher Training of Hercules Missile Crewman, MOS 16B10, May 67 (Revision).

ASubjScd 44-16C10, Advanced Individual Training and Refresher Training of Hercules Fire Control Crewman, MOS 16C10, Jun 67 (Revision).

ASubjScd 44-16D10, Advanced Individual Training and Refresher Training of Hawk Missile Crewman, MOS 16D10, Feb 70 (Revision).

ASubjScd 44-16E10, Advanced Individual Training and Refresher Training of Hawk Missile Fire Control Crewman, MOS 16E10, Feb 70 (Revision).

ASubjScd 44-16H10, Advanced Individual Training and Refresher Training of Air Defense Artillery Operations and Intelligence Assistant, MOS 16H10, May 67 (Revision).

ASubjScd 44-16R10, Advanced Individual Training and Refresher Training of Vulcan/ Chaparral Crewman, MOS 16R10, Apr 70 (Revision).

ASubjScd 44-17F10 (44-16J10), Advanced Individual Training and Refresher Training of Defense Acquisition and Surveillance Radar Crewman, MOS 17F10, Jun 67 (Revision).

MISSILE ELECTRONICS AND CONTROL SYSTEMS DEPARTMENT

SELF-PACED INDIVIDUALIZED INSTRUCTION

A student builds a circuit on the Philco-Ford basic trainer as he receives instructions from the cassette tape recorder during a class in self-paced individualized instruction.

A new technique for teaching electronics has been tested at the US Army Air Defense School. The new teaching concept, Self-Paced Individualized Instruction (SPII), was developed by the Missile Electronics Division, Missile Electronics and Control Systems Department. Using a cassette tape recorder as the principal instructional aid, the student progresses through a course of instruction at his own speed.

A pilot SPII course was conducted in November 1971. In a short basic electronics course, a class of 14 students was divided into two sections with one section studying under the "self-paced" method and the other under the group-study method. The "self-paced" section actually learned more in less time. They cut instruction time by almost half and raised the level of learning by almost 10 percent.

The new technique is simple. The student inserts a cassette tape into the recorder, clamps on a headset to prevent distraction from surrounding noise, and receives detailed and easy-to-follow instructions and explanations from the recorder. The tape directs him to his work sheet and to a compact circuit-building device (Basic Trainer—produced by Philco-Ford).

The student can build almost any type of basic circuit in a matter of minutes, using specially designed plug-in resistors, capacitors, and transistors. If he wants to review any phase of the instruction block, he simply reverses the tape to that particular portion and replays it.

Students and instructors alike are quick to praise this promising new method of instruction. One instructor reports that the students are intensely enthusiastic about the "self-paced" training. Another says that at the outset of the course, students are so deeply absorbed in this new approach to teaching that they forget to stop for breaks. A graduate of the course says that he has never received so much information in such a short time, and learned with so little effort; and another argues that it should become the standard teaching method in all electronics courses. The encouraging results of this test were not surprising to the program's chief architect, Mr. Sanford V. Whiting, a 23-year veteran training specialist in the Missile Electronics Division.

A second class, in which all students studied under the new concept, also produced outstanding results. Since then, "self-paced" instruction has moved from the experimental stage to acceptance as a proven teaching method. Plans now call for all basic electronics courses to go under the new system when sufficient recorders and basic trainers are available.

Based on the results attained by the two test classes, we can conclude that self-paced individualized instruction will have a far-reaching effect on courses of resident instruction and may well lead the way in pointing new directions in other areas of training at the US Army Air Defense School.

NONRESIDENT INSTRUCTION DEPARTMENT

AIR DEFENSE ARTILLERY STAFF NONCOMMISSIONED OFFICER COURSE

The Nonresident Instruction Department, US Army Air Defense School, has developed a new correspondence course designed to prepare Air Defense Artillery noncommissioned officers for staff duty in ADA units at battalion, group, and brigade level. Enlisted personnel, E5 or higher, who have successfully completed the Air Defense Artillery Operations and Intelligence NCO, MOS 16H40, correspondence course are encouraged to apply.

The new course consists of 145 credit hours and includes such subjects as records management, office management, effective written communications, the staff study, military leadership, methods of instruction, introduction to automatic data processing, and other related staff subjects.

Qualified soldiers are encouraged to enroll in this new course by submitting an application (DA Form 145) through their commanding officers. In block 11, enter ADA Staff NCO Course. Further information may be obtained by writing: Commandant, US Army Air Defense School, ATTN: Nonresident Instruction Department, P.O. Box 5330, Fort Bliss, Texas 79916.

Notes From
US Army Air Defense Center and Fort Bliss

NATIONAL GUARD PILOTS ACT AS DAILY TARGETS FOR FORT BLISS MISSILE TRAINEES

How does it feel to be a pilot and know you are a daily target for every type of air defense weapon system employed by the US Army? Lieutenant Colonel David L. Quinlan, commander of the New Mexico Air National Guard's Detachment 1, and seven more of the unit's pilots could answer in detail because they fly some 75 support missions each month in the training of air defense artillerymen at Fort Bliss.

Detachment 1 was organized in November 1971 by the Air Force and the National Guard Bureau to fly target support missions for all types of training and weapons testing at the US Army Air Defense Center and Fort Bliss.

Based at Holloman Air Force Base, New Mexico, the sometimes called "Enchilada Air Force" pilots fly their F-100C aircraft over specified routes at regulated altitudes as Army trainees track and "destroy" the aircraft through electrically recorded simulation.

For radar and detection training, the Guardsmen fly B-57's using various electronic countermeasures such as radar signal jamming and drop chaff-type jamming material to confuse trainees while the F-100's attempt to reach their destinations unnoticed.

During simulated strafing and bombing runs, Detachment 1 pilots must identify camouflaged equipment and "attack" it while the Army is trying to "destroy" them.

Occasionally the Air Defense Center requires live firing for its training or testing. On these occasions, the Guardsmen fulfill their mission by towing targets which trail a mile behind the "target" aircraft.

Many of the Detachment 1 missions are performed for other government agencies. Recently it flew in support of the USAMICOM's evaluation of the French Crotale air defense system at Dona Ana Range.

The Detachment has 41 full-time members, with half the unit stationed at Holloman Air Force Base performing flight line maintenance on their 12 aircraft. All radio and advanced electronic work is also carried out at Holloman in addition to the mounting and rigging of the towed targets.

The other members of the unit are technicians stationed at the New Mexico Air National Guard facility in Albuquerque, New Mexico, performing scheduled maintenance, aircraft modifications, and jet engine repair.

VULCAN GUN

US Army Materiel Command recently announced that the term "antiaircraft" is being phased out of Army lexicon. In this connection, Vulcan nomenclature has officially been changed from Gun, Antiaircraft Artillery, Self-Propelled and Towed, to Gun, Air Defense Artillery, Self-Propelled and Towed.

NEW GUIDANCE TECHNIQUE

Army missilemen from Redstone Arsenal have fired specially fitted large rockets and guided them to precise impacts at ranges of more than 10 miles by homing on laser beams reflected off a ground target. US Army Missile Command (USAMICOM) officials say accuracy exceeded expectations in flight demonstrations at White Sands Missile Range, New Mexico. The new guidance technique, which the Army calls semiactive laser guidance, was developed in laboratories at USAMICOM.

Used in the tests were Little John rockets (no longer in service use), which carried nose-mounted movable air vanes, a small guidance package, and a seeker unit. After launch, the rocket followed a normal, unguided trajectory until it approached the general target area. Then the seeker, detecting laser light energy reflected from the target, generated signals that applied a terminal correction to the rocket's flight path and steered it to a precise impact. A small laser, mounted on the ground several hundred feet from the target, transmitted the high-intensity light beam used to illuminate the target.

Not only is the guidance scheme applicable to missiles, but the concept can be used with almost any Army weapon that follows a ballistic trajectory.

USAMICOM modified the rockets and developed the laser illuminator, and Texas Instruments Company built the missile borne seeker under contract with USAMICOM.

—Missile and Munitions Materiel Digest

Notes From the US Army Air Defense Board

TESTS

NIKE HERCULES

The product improvement test of the surface-to-air missile capabilities modifications to Nike Hercules was recently completed. The test of the side lobe fast blanking modifications to Nike Hercules was conducted between February and June 1972.

FAAR

The forward area alerting radar system, which is to provide low-altitude threat warning to organic and support air defense units in the division, corps, and field army area, has undergone an initial production test at Dona Ana Range. Personnel from units at Fort Bliss were used to support the test under observation and supervision of US Army Air Defense Board personnel who are responsible for conducting and evaluating forward area alerting radar equipment.

Subtests of a maintenance demonstration and blip/scan were successfully completed by February 1972. An extended operational performance subtest subjected the system to seven consecutive 24-hour operations. Concurrent with the operational performance subtest for the radar, US Army Combat Developments Command Air Defense Agency conducted an operational test and evaluation the last 2 weeks of March 1972. Upon completion of the initial production test the results were reported to Headquarters, US Army Test and Evaluation Command, Aberdeen Proving Ground, Maryland, for evaluation and approval before further action is taken.

IMPROVED HAWK

The Air Defense Board conducted initial production testing of Improved Hawk during April 1972.

Notes From the Human Resources Research Organization

HumRRO Division No. 5 is engaging in a new work unit entitled MODMAN which is sponsored by Headquarters, US Continental Army Command. The objective of the research is to develop and evaluate a practical model and procedures for systems engineering of nonroutine, man ascendant (leading, managing, decision making) command, supervision, and leadership functions at various levels of Army training; i.e., basic and advanced officer and Noncommissioned Officer Education System courses.

The following technical reports have recently been published by HumRRO:

TR 70-16 - A Comparison of Correlated Job and Work Sample Measures for General Vehicle Repairman.

TR 70-19 - Development of a Training Program and Job Aids for Maintenance of Electronic Communication Equipment.

TR 70-21 - Prompting and Guessing in Tank Identification.

TR 70-22 - Computer Administered Instruction: Description of the Hardware/Software Subsytem.

TR 70-23 - Combat Job Requirements for Principal Staff Personnel: Division, Brigade, and Battalion.

TR 70-24 - Shape Perception Judgments as a Function of Stimulus Orientation, Stimulus Background, and Perceptual Style.

Technical advisory services provided by HumRRO during the second quarter FY 72 included:

- Preparation of task and skills analysis procedures for use by the SAM-D contractor.

- Analysis of the computations for the Nike Hercules surface-to-air mission and associated training materials, to include redesign of the form used.

- Consultations at Headquarters, US Army Missile Command, concerning modeling of Redeye and Chaparral gunner performance.

- Providing comments on the human factors portion of the expanded service test plan for the Improved Hawk platoon command post, interrogator set AN/TPX-46, and electronic shop transportable AN/TSM-126.

Air Defense Artillery Equipment for Air Traffic Regulation?

Major James J. Rudy and Mr. J.B. Fries
US Army Combat Developments Command Air Defense Agency

(Based on series of USACDCADA briefings)

The Army has too many "sky-watchers." Army aviation tries to keep track of its aircraft; field artillery gunners keep an eye out for aircraft in the line of fire; we in the Air Defense Artillery keep a special watch for hostiles. We all exchange information in varying degrees with the Air Force. There's duplication of sky-watching effort all around—some is essential—but presently the effort is not efficiently coordinated. The undesirable duplication addressed in this article is that inherent in the air defense artillery (ADA) and the Army Air Traffic Regulation (ATR) subsystems. That duplication can cost the Army plenty of money and manpower.

One way to reduce duplication is to combine subsystems; therefore, let's look at a concept for fielding a combined ADA/ATR system in the not-too-distant future. The main ingredients are ADA radars, to include the divisional forward area alerting radars (FAAR), the AN/TSQ-73 Missile Minder, and a data consolidation device called "system netting station" (SNS). We'll discuss only division-level concepts, but keep in mind that the basic ideas apply at all levels of the field army.

First, some assumptions—

- The air environment during mid- and high-intensity warfare features lots of friendly and hostile air activity over both sides' ground forces. This means airspace coordination is critical. Coordination is complicated in a hostile air environment because both our Air Force and our Army Aviation will be forced to operate "on the deck" for a good part of the time.

- The Army wants improved ADA and ATR subsystems. ADA needs are already recognized in that the FAAR and AN/TSQ-73 are approved and funded items. The need for a modern ATR subsystem is stated in an Army requirements document entitled "Automated Air Traffic Management System (ATMS)," now being staffed around DA. ATMS hopes to make it to the field in the early 1980's. So, you see, the FAAR/Q-73 equipment will beat ATMS into the field.

- The ADA system of radars—don't forget the FAAR's—can see into most of the field army airspace, even down to the low altitudes in the forward areas. And these radars are not fussy about what they see—they see everything—hostile aircraft, friendly aircraft that are kind enough to cooperate by identifying themselves, and friendly aircraft that are not being so cooperative. No other Army surveillance system can make that statement.

So, the question is, why not employ the FAAR and Q-73 to do a large part of the ATR task? Specifically, why not let these systems, with the necessary modifications, handle the "enroute" and "approach/departure control" portions of the future ATR task? ADA equipment, combined with Army Aviation's improved approach and control tower facilities, should

give the Army an improved ATR capability early (key point No. 1) and at less cost (key point No. 2) than going for two separate subsystems—as is the current trend.

At this point, a review of the current system is appropriate. Figure 1 shows the "typical" system of 1972.

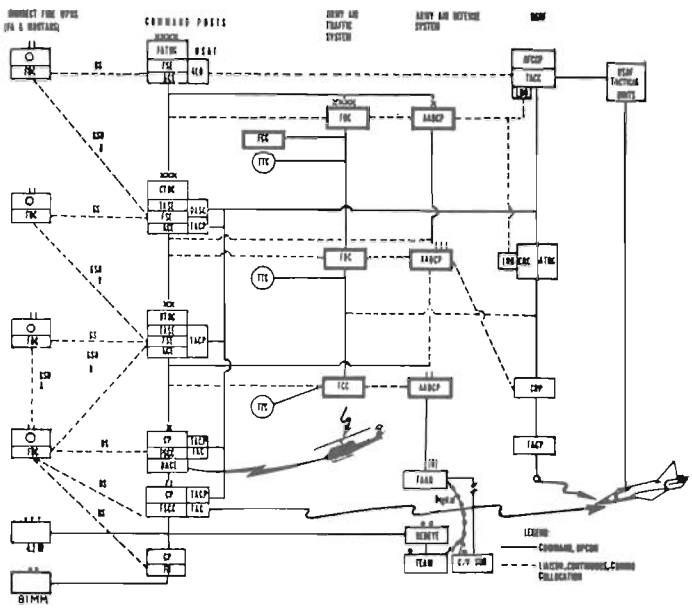

Figure 1. "Current" system.

You see the field artillery and mortar, Army air traffic regulation, Army air defense, Air Force air support, Air Force ATR/air defense, and Army command post subsystems. Let's lock in on the Army's ADA and ATR subsystems, which run parallel up and down the middle of figure 1.

The Army's ATR subsystem consists of flight operations centers (FOC), flight coordination centers (FCC), and terminal traffic control (TTC) equipment. These are currently all "manual" facilities. About 12 to 18 of the FOC's and FCC's would be in a type field army. The ATMS concept proposes to replace all this with a modern ATR system in the 1980's. This ATR system works with "cooperating" friendly Army aircraft.

The ADA subsystem employs Army air defense command posts (AADCP) at the various levels—a total of 30 or more in a type field army. The AADCP's coordinating Nike Hercules and Hawk operations are assisted by the AN/MSG-4 semiautomatic information exchange equipment. The MSG-4 is scheduled to be replaced soon by the TSQ-73. The division AADCP's are "manual" and are concerned with Chaparral and Vulcan. The ADA is oriented toward looking for hostile aircraft.

So you can see we have two separate and parallel subsystems keeping track of those aircraft of most interest to them. About the only place these two subsystems tie together is over in the force CP's. There, the ADA and Army Aviation each furnish half of the airspace

coordination element (ACE). Hopefully, this will include a brigade-level ACE (BACE)—a new and useful concept. Doctrine also says the ADA and ATR subsystems tie together directly for information exchange at all levels but, in the opinion of the authors, these words are not actually backed up by deeds.

Now that you are all excited and want to know what to do about this unfortunate situation, we'll tell you. See figure 2 for one way to improve things.

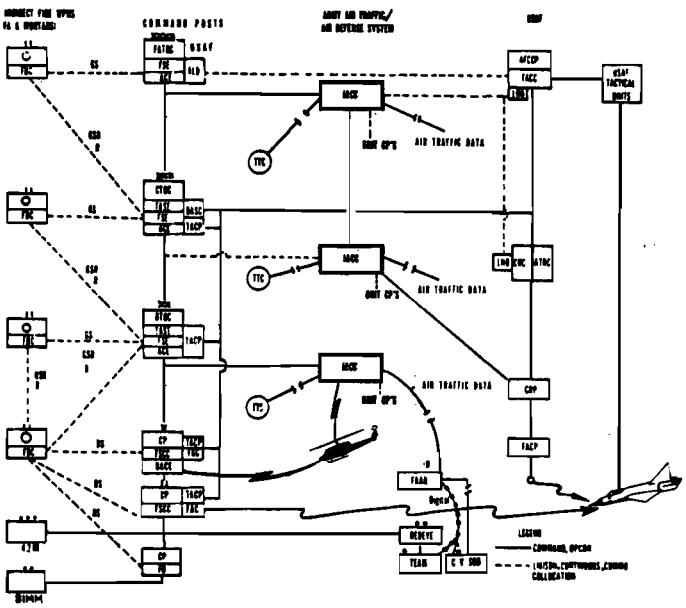

Figure 2. A better way.

Look first at the JACC's (Joint ADA/Army Aviation Airspace Coordination Center). These are TSQ-73's, with modified displays and software, which form integrated ADA/ATR facilities manned by ADA and Army Aviation types. The Q-73's receive data from ADA radars of all types—plus the Air Force—and anything else that gives aircraft position data, and therefore have a good display of the overall friendly and hostile air situation. This melding of subsystems has simplified figure 2 as compared to figure 1, and therefore has reduced the total number of Army facilities required for the ADA and ATR functions.

A closer look at the system in the division area, the main area for airspace coordination problems, is provided in figure 3.

On the right of figure 3 you see a JACC. This is a modified Q-73 which replaces the former division AADCP and division FCC. The division JACC gets its air traffic information from the corps JACC (for long-range and mid-high-altitude coverage) and from the eight divisional FAAR's. Don't forget that eight radars, if netted, see virtually everything in the division airspace. The FAAR data is sent up automatically to the System Netting Station (SNS) (a function, not necessarily a piece of hardware) by the eight FAAR's. The SNS then assembles this FAAR data and presents a composite division low-altitude air picture to the JACC displays. The SNS function is essential because manual handling and correlation of all this data is impossible.

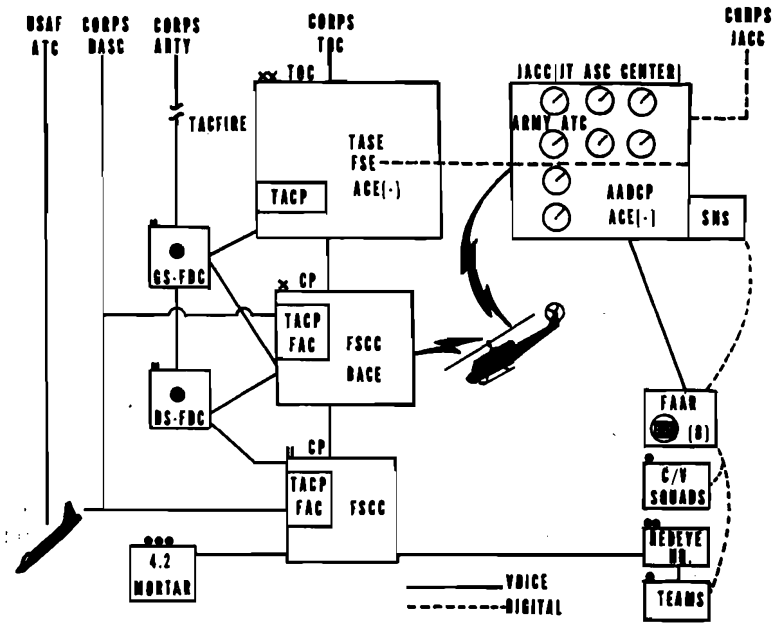

Figure 3. Division JACC.

The two scopes in the bottom half of the JACC diagram are for ADA specialists who maintain an overview of the air situation, provide a high-quality air warning service to ADA and other units, and recommend air defense weapons control status changes to the division commander. (At last, here's a chance for ADA to get a "weapons free" once in awhile.)

The upper half of the JACC diagram shows two to six scopes. The division's air traffic regulation specialists are stationed here and tasked with providing all required air traffic advisory services. They have access to the full JACC displays and are assisted by automatic data processing services from the Q-73 computer. These people also have the ground-to-air communications to do this job.

Now for an example of how an air traffic regulation specialist at a modified Q-73 might handle a piece of the air traffic function. See figure 4 for a simplified situation as might be displayed on one of the two-to-six ATR scopes. Note the symbology. The friendly aircraft depicted on figure 4 have been under the surveillance of the system since they became airborne.

After takeoff, they identified themselves so that their aircraft numbers could be associated with the proper tracks. They have proceeded on their mission without a requirement for formal flight plan or further communications. After they have entered into the system they will receive only "advisory" communications from the ground.

The aircraft on the left (with the arrow) is going to need some "advice" because it is about to blunder into a field artillery firing zone. The Q-73 computer notes the imminent conflict and automatically computes a solution. The solution is printed out automatically on the alphanumeric portion of the scope. This printout warns the ATR operator of the problem and presents the computer's recommendations. The operator then gives the proper advisory to the aircraft, via voice communications.

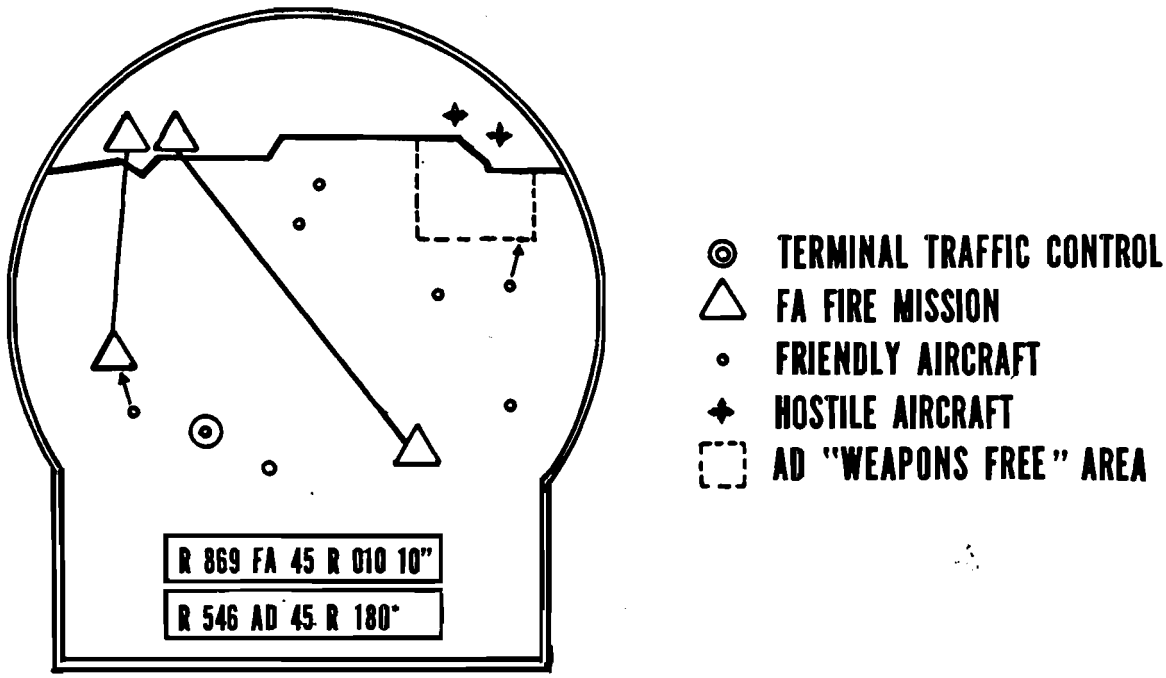

Figure 4. Scope display.

On the right of figure 4 we see another aircraft about to get into trouble by entering an air defense weapons free zone. Again the computer computes and prints out a solution to the impending conflict and the operator advises the aircraft. If the aviator has a better solution, he is free to use it.

When Army aviators are flying under instrument flight rules (IFR), they'll want more help than in the simple situations just discussed. They'll want en route aid in addition to the conflict-avoidance advisories. The current Army ATR is considered weak in this area. The proposed system could help a lot because the ATR specialists can see the entire situation in good and bad weather.

In summary, the proposed system appears to—

- Fill a need. The ADA portion of the need is verified by the fact that the FAAR and Q-73 are being procured. The need to improve the Army's ATR capability is recognized in the ATMS requirements document.

- Aid Army aviation without imposing restrictions. The system exercises only that degree of control desired by the ground force commander.

- Offer opportunity for simplification. One combined system replaces (or precludes) two separate systems. Economy is inherent.

Reactions to this proposal have varied, with most being favorable. This concept forms the basis for an Air Defense Center Team briefing that has been widely conducted by USACDCADA. The feasibility of this conceptual proposal is currently being looked at by DA/CDC/AMC. Readers can help refine this concept by providing constructive criticism. But do keep this in mind: The objective is to benefit the Army—not one particular branch or function.

Air Defense Units in STRAF Training

Figure 1. The plotting board is a source of immediate nuclear information to the combat commander.

Strategic Army Forces (STRAF) training continues at Fort Bliss as various Air Defense Artillery units take to the field in their operational readiness training (ORT). STRAF refers to that part of the Army, normally located in the continental United States, which is trained, equipped, and maintained for world-wide deployment in support of US national policy. These select units are trained in all facets of field operations, with emphasis placed on their ability to bring equipment to an operational status and maintain that condition for an extended period. The men in figures 1 through 3 are members of the 31st Air Defense Artillery Brigade, elements of which recently underwent an ORT. Plotting a nuclear detonation area is an important factor in the test (fig 1). Here the CBR NCO maps the area of detonation and predicted fallout. Checking the lay of the M60 machinegun (fig 2), the gunner adjusts the lateral limits of fire. Even in the chow line the men are constantly reminded of security. In figure 3 a soldier notes the latest password before being served.

Figure 2. The M60 machinegun is an impressive element of perimeter defense.

Figure 3. A hot meal is always a welcome interlude.

Recent realinement of forces at Fort Bliss brought the 11th Air Defense Artillery Group entirely under STRAF and the 5th Battalion (Chaparral/Vulcan)(SP), 59th Artillery, was added to the 11th ADA Group in October 1971. This means that all units now in the 11th Group must be maintained at a high standard of readiness so that, if necessary, they may be deployed to a new area of operations on short notice.

The STRAF unit's mission is a tactical one: to be ready to respond with its particular air defense specialty (self-propelled or towed Hawk, Chaparral, Vulcan, or various combinations of these systems) on a contingency basis. The contingency factor of the STRAF status implies chance or uncertain conditions. In the case of the 11th ADA Group, it relates to the ability to react to a possible accidental or chance event. Now the accent is on more meaningful training relative to the mission of the Group: training that focuses on activities which contribute to fulfillment of the primary mission. It is more relative, more demanding, and more realistic; an example, field training exercises in preparation for Boldshot/Brimfire. Boldshot/Brimfire is a STRAF-oriented operation in which an ADA battalion is airlifted to an exercise site to participate in a rehearsal relative to the STRAF mission. In this exercise, the ADA battalion and attached units work with other Army units (as well as Air Force and Navy units) in a realistic operation that tests the capabilities of all units involved.

Adventure training, in connection with STRAF training, is a new experience for ADA units but it will probably become commonplace in the future. The 6th Battalion, 61st AD Artillery, 11th ADA Group, recently completed its first adventure training exercise during which it set up a communications network that stretched from Fort Bliss to the mountains of the Lincoln National Forest, a distance of over 100 miles. In this exercise small groups of personnel operated within the relative wilderness of the Lincoln National Forest for 3 days and were resupplied by helicopter. More adventure training is already being planned by the 6th of the 61st.

Figure 4. Men from a Chaparral battery of the 5th Battalion (C/V) (SP), 59th Air Defense Artillery, load a Chaparral round in preparation for aircraft tracking during a field exercise.

The 5th Battalion, 59th AD Artillery, keeps its men mission-ready with weekly overnight training exercises. Each of the four batteries of the battalion spends at least 1 day and night each week operating in the field (fig 4). From the STRAF mission has evolved new goals, new training, and a new attitude on the part of ADA organizations involved. As one senior commander put it, "The new outlook will provide the best trained air defense artillerymen in the Army, regardless of the mission or role."

Group Study–A Unique Training Technique

Captain Pinkney J. Garrison III
Nonresident Instruction Department
US Army Air Defense School

Individual training has priority on every commander's list of recurring problems and stands particularly high on the Air Defense Artillery (ADA) commander's list. Operational requirements compound the training problem in ADA units, making it almost impossible to assemble a significant portion of the battery for training. Attempts to solve the problem often lead to reduced command control of training because of decentralization, or produce excessive centralization which may deny junior officers and noncommissioned officers their proper role. Frequently, training becomes a paper exercise, benefiting no one. Lack of knowledge and experience on the part of junior leaders contributes to the individual training problem. The training method discussed in this article represents an effort to solve the problem.

BASIC GOALS

Reduce or eliminate the requirement to assemble large groups for training.

Improve command control of training in terms of content, quality, and ability to monitor and evaluate training results.

Improve training quality.

Make effective use of periods when operational requirements demand that troops be at their duty stations though they have no productive duties to perform.

Involve junior leaders in training to compensate for their lack of experience.

Accomplish these goals without requiring a disproportionate amount of the commander's time.

TRAINING REQUIREMENTS

A thorough knowledge of unit training requirements is necessary when planning an effective training program. In this discussion it is assumed that a training inventory has been conducted and training requirements have been identified.

SOURCES OF ASSISTANCE

All Army service schools offer correspondence courses which teach subjects in their respective fields of interest. The method discussed here is based on use of these courses, through group study, to meet unit training requirements. Air defense units will find most individual training needs met by courses offered by the Air Defense School. Courses to meet special training needs are often available at other service schools. Catalogs may be obtained by writing to the service schools, ATTN: DNRI.

TRAINING PROGRAM

Basically the program consists of enrolling soldiers in correspondence courses through the group study program and designating NCO's or junior officers to act as group leaders. Certain administrative procedures and careful selection of groups and subjects are required to obtain maximum effectiveness and to insure that unit training requirements are satisfied.

The first step in implementing this program is to identify study groups. These groups should be composed of soldiers who have common training requirements, the same work area, and who generally follow the same work schedule. Most unit personnel will fall in a natural group such as a fire control crew, maintenance section, etc. Group size may vary from 2 to 30 persons.

A leader must be appointed for each group. The NCO in charge, section chief, motor sergeant, etc., is the logical choice. Using this leader will produce bonus effects discussed later.

Once groups are identified, specific training requirements and priorities should be established. Training requirements can then be compared to correspondence course offerings, identifying courses which meet training needs. Training requirements which cannot be met by correspondence courses must be satisfied by other types of instruction.

At this point the primary job of the commander—planning—is complete. He is now ready to follow a tried and true ADA operational axiom: centralized control - decentralized execution. Assign responsibility for carrying out the training plan to the group leaders and their supervisors and use the indicators discussed below to monitor their progress.

The commander should tell each group study leader that he is responsible for training his men in certain areas and provide a basic plan for carrying out those responsibilities. Here is what the group leader has to do:

Enroll his group in the first correspondence course. To do this he must have each individual complete a DA Form 145 and forward it to the proponent school's NRI Department. (The unit training NCO should assist here. The commander must sign each DA Form 145 and the cover letter designating the group study leader. Completing this paperwork in the battery headquarters is the initial supervisory check.)

Receive the course material from the service school and issue it to the students (second supervisory check).

Schedule and conduct group study sessions. Each course consists of a series of lessons, each of which has an exercise consisting of a number of questions to be answered after studying designated reference material. The group leader should require that his group study the reference material, conduct as much instruction as he feels necessary in the subject, lead a group discussion of key points, and require that each student complete the exercises. (Free discussion of exercise questions is encouraged but each student must make his own decision as to the correct answer.)

Return completed exercise answer sheets to the training NCO for grading (third supervisory check). Key information is training progress and training quality. Solution sheets that are furnished with subcourse material should be retained in the training office for supervisory control.

When all subcourse lessons have been completed, forward a group roster to the schools, listing individuals' lesson scores (fourth supervisory check).

Administer examinations (this responsibility is assigned to the training officer) and return completed examinations to the school for grading. Formal recognition of subcourse completion is returned by the school with the graded examination. Examination grades provide an important supervisory check. They indicate relative training progress for individuals, and group averages reflect the instructional and supervisory ability of the junior leaders.

Repeat the cycle with the next assigned correspondence course.

SUMMARY OF GROUP STUDY BENEFITS

By making group leaders for training performed through group study, it is possible to carry on a good training program without assembling the entire battery.

Increased control of training content is obtained. During initial planning, the commander selects those courses which cover the subjects he desires to have taught to meet his training needs.

Control of training is achieved by monitoring the supervisory controls and taking corrective action as required. Exercise and examination scores provide excellent indications of training results.

Training quality will be improved. Correspondence courses are written by professionals whose full time job is training.

Group leaders can schedule study sessions during periods when operational requirements demand that personnel be at their duty stations but there are no productive duties to perform. This practice makes use of what is now "dead time."

Junior leaders are definitely involved. "Decentralized execution" puts a measure of responsibility squarely on their shoulders. Having been given a clearly defined mission and the means to accomplish it, it's up to them to perform.

Once initial planning is complete, the objective supervisory controls and decentralized execution inherent in this plan should actually reduce the requirements on the commander's time.

BONUS EFFECTS

All personnel taking the same course receive the same graded examinations. This uniformity lends itself to individual and element competition. Unit competition is possible if an entire battalion follows this plan.

The plan is inherently flexible. Replacements can be phased into the program as the need arises without disrupting advanced training in progress for other troops.

Although the discussion has centered on training enlisted soldiers, it is easily adapted to train junior officers and noncommissioned officers.

Records of achievement are generated for students and their supervisors. These records are useful in personnel management decisions, are enlightening exhibits for inspectors and higher level commanders, and (most important to the troops) translate directly into promotion points.

Preparation time is significantly reduced. The time saved here can be applied to areas not adequately covered by correspondence courses and to team and unit training which should improve training in these areas.

This training method is not a panacea, but it does open the door to improved training. It requires initiative and effort from junior leaders to succeed, and it supplies the basic ingredients required. Any competent noncommissioned officer can reasonably be expected to carry out his part. "Hands On" training isn't supplied, but only a minimum of imagination and preparation is required to insert practical work into group sessions. Try it! If the US Army Air Defense School can help you with your training job, or if you need help in getting a group study program going, write:

Commandant
US Army Air Defense School
ATTN: DNRI, Box 5330
Fort Bliss, Texas 79916

Defense/Flak Analysis

Major Herbert Siegel
Command and Staff Department
US Army Air Defense School

The development of increased air defense capabilities by potential enemy forces, coupled with the increased United States reliance on aircraft for essential combat and combat support functions, requires examination of the doctrine and tactics employed by our units to counter this threat. In view of this, the need to study the status of the Army programs for instructing officers on analysis techniques and countermeasures is required.

"If we lose the war in the air, we lose the war . . . quickly!"

—Field Marshall Montgomery

" . . . it has been over 25 years since an American Army has been under serious air attack. Only a handful of us remain who have suffered that experience. Yet in future conflicts our combat troops are not likely to enjoy the immunity from air attack they have had in Korea and Vietnam . . ."

—General William C. Westmoreland

Although these two statements were made over a quarter of a century apart, their message is still meaningful in military history. A prime example of the importance of air superiority is Israel's march to victory in 6 days.

It is important that in any conflict we gain air superiority as quickly and effectively as possible and that our effort be based on tactics and doctrine that will give us the greatest odds for success.

Our losses in the Republic of Vietnam have again emphasized that antiaircraft guns are a major factor in the battle for air superiority because the majority of our air losses have been due to antiaircraft fire. The North Vietnamese, North Koreans, Chinese, and Russians have tremendous quantities of antiaircraft guns. In Russia and the Warsaw Pact countries there is an effective balance in guns and missiles and sophisticated fire control equipment. The question to be answered for any future conflict is: how are we going to overcome these strong gun defenses and reduce our losses to acceptable levels? At present, a partial vacuum exists in this area; however, we can eliminate this vacuum through a field called defense analysis, or as commonly referred to during World War II, flak analysis. Although from age alone it may appear as an old, outdated method, in today's Army of sophisticated air defense it is a territory again worthy of deep exploration.

Defense analysis includes the translation of information concerning enemy antiaircraft defenses into intelligence that would assure efficient airstrikes by making possible maximum damage on a target with minimum loss of aircraft, whether they are jet fighters or helicopters. For our airmobile operations, this means minimum loss of helicopters carrying troops into a landing zone. This is accomplished by determining the least exposed routes to and from the target area—that is, entering and leaving the target area on courses which cross over the weakest part of the enemy defense in the shortest possible time and by

devising proper evasive action. This action specifies the spacing and altitude for aircraft formations to reduce the effectiveness of enemy antiaircraft fires.

The US Army Air Defense School has recognized the importance of this field and has incorporated instruction on enemy gun defense analysis into its program of instruction. This defense analysis at present is taught only to ADA career course students. (Programed career course student load for FY 71 was 292 students and for FY 72 is 145.) The instruction on enemy gun defense analysis deals primarily with a mathematical determination of the effectiveness of the firepower of an enemy antiaircraft defense. Defense analysis not only offers a means for determining the best routes of approach into an objective area and the expected relative losses in aircraft and men, but immense possibilities for reduction of aircraft losses. For example, it is possible from an analytical study to determine the priorities for flak suppression and counterbattery. In addition, the same methods that we use to analyze an enemy defense can be applied to our own forward area weapon defense design to determine if we indeed have a strong and formidable defense. Our present FAW weapon design is limited to employment based on terrain study and basic deployment guidelines. It does not address, as does our missile defense design, a final analysis to determine analytically the capability of the defense. The program of instruction on missile defense analysis includes over 30 hours of instruction. Career course students have attacked this problem area in seminar-type study groups with some degree of success. At present the solution of the enemy defense analysis problem at other Army schools is limited to a study of flak suppression and does not address the determination of route and target priorities. The analysis methodology as taught in the Air Defense School, to provide a standard basis for computation, is based on the 13 assumptions which fall into one of three categories: gun, target, and personnel, as follows:

1. Target flies a straight and level course at a constant speed. This is the same basic assumption that is made in our current missile defense analysis.

2. One gun is pitted against one aircraft.

3. Fire is conducted on the target incoming leg only.

4. The gun fires at its cyclic rate until it is out of ammunition or its tube needs cooling.

5. The gun crews and fire control personnel are experienced, well trained, and at full strength.

6. The gun is in position and the fire control personnel are alert when the target arrives within acquisition range.

7. No mechanical, electrical, or electronic failures occur during the engagement.

8. The weather permits unlimited visibility.

9. No ECM.

10. Guns and fire control equipment are sited to provide a 5° mask clearance.

11. Projectiles are equipped with point-detonating fuzes only.

12. Hits are not counted when striking velocities are less than 150 meters per second.

13. Fire on standard target. This standard target (fig 1) is a flying box in the sky which has dimensions in feet of 150 x 400 x 500.

These assumptions, of course, optimize the effectiveness of the antiaircraft weapons.

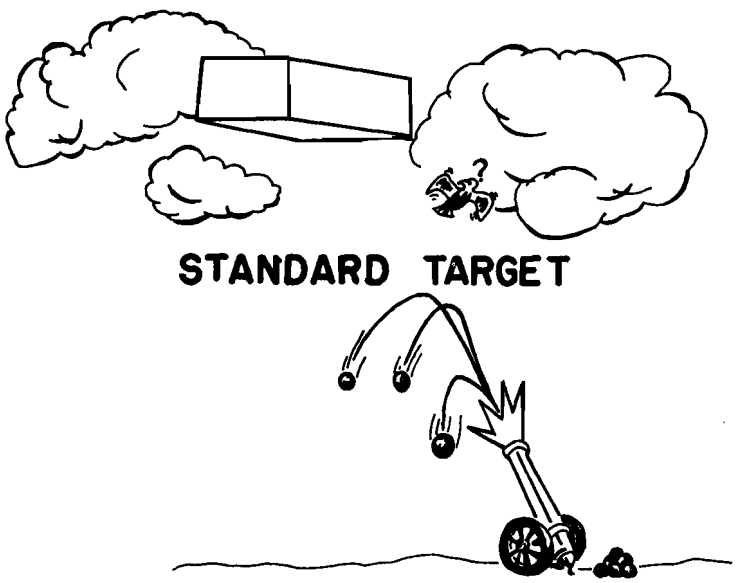

Figure 1. Standard target.

The solution to the defense analysis problem follows. Keep in mind that this is the relative effectiveness of an enemy antiaircraft defense, not the absolute attrition rate for aircraft along a route into the enemy defended area. It is not a complete road map to success, but it does offer a means for our commanders to arrive at a tactical decision—a decision that can and will save lives.

First, the most important item of intelligence we must have is the exact location and type of each gun in the defended area (fig 2). It is axiomatic that no analysis is more accurate than the information on which it is based, and this is extremely true for defense analysis. Pinpoint gun positions are best secured by photo reconnaissance and proper photo interpretation, which should be all-inclusive, continuous, and current. With this information we can now go to a system developed for instructional purposes at the US Army Air Defense School and solve our problem.

The steps in this procedure involve the use of numerous nomograms, graphs, charts, and analyzing devices. The main factors considered in the solution of the defense analysis problem are:

1. Initial planning factors.

2. Lethal hits.

3. Kill probability (P_K).

4. Degradation factors.

5. Compounded P_K.

6. Flak clock.

The initial planning requires determination of aircraft speed and altitude of attack. The types of enemy weapons and their effectiveness are also required.

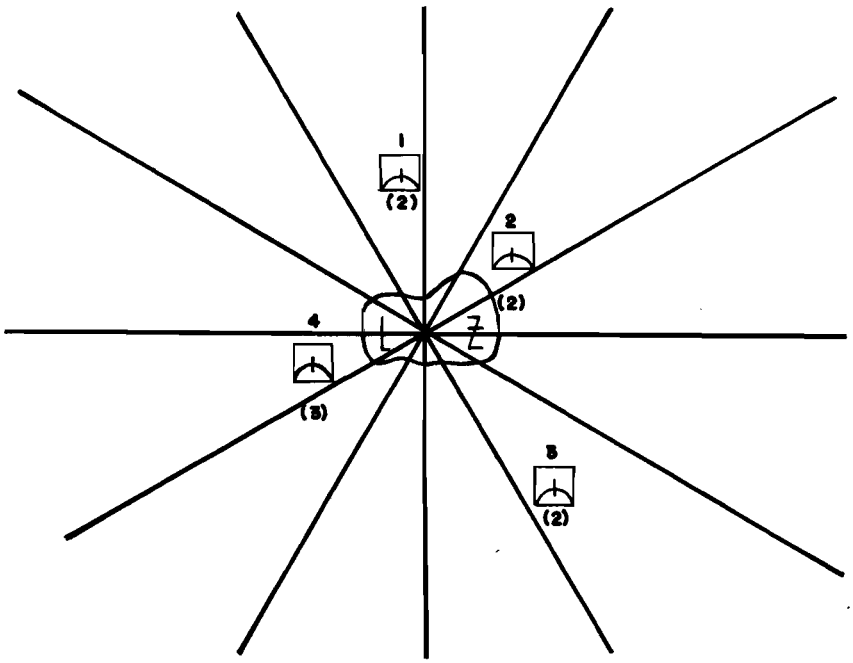

Figure 2. Map showing location and type of weapons in the defended area.

With this basic information we can determine the number of lethal hits on the aircraft. Lethal hits refer to the effectiveness of an explosive round upon detonation. Therefore, to derive lethal hits, we determine by use of computerized charts and graphs the number of hits on the standard target and then reduce this number in consideration of the vulnerability of the aircraft with respect to the type of ammunition and the relationship of the aircraft in size to the standard target.

A standard kill probability conversion graph determines from the lethal hits the probability of an A-type kill; i.e., an aircraft kill within 5 minutes after being damaged. But this is not yet a realistic figure. To make it more meaningful, we must use various degradation factors related to antiaircraft guns. The present factors are:

1. Environment. Probability of detection - first pass (assume 100 percent manning).

2. Ground. Probability of no gross error.

3. System reliability. Gun/ammunition and crew reaction.

4. Degradation. Visibility (visually directed only) (clear, hazy, obscure).

After application of these factors, the data must be further refined by applying it to all the gun positions because, up to this time, we have considered only one position. To compound the various probabilities, we use a standard compounding nomogram to provide the probabilities of kills for a single aircraft along that chosen route when engaged by the entire antiaircraft defense. Now make the same computations for every proposed route of attack. The best route is the one with the lower compounded P_K. This information is plotted on polar coordinate paper as a coverage diagram of the enemy defense capability or a flak clock (fig 3). In this example the best route in would be from the 4,000-mil direction. P_K would be only a relative figure, not an absolute attrition rate, but it does offer the commander the greatest chance for success.

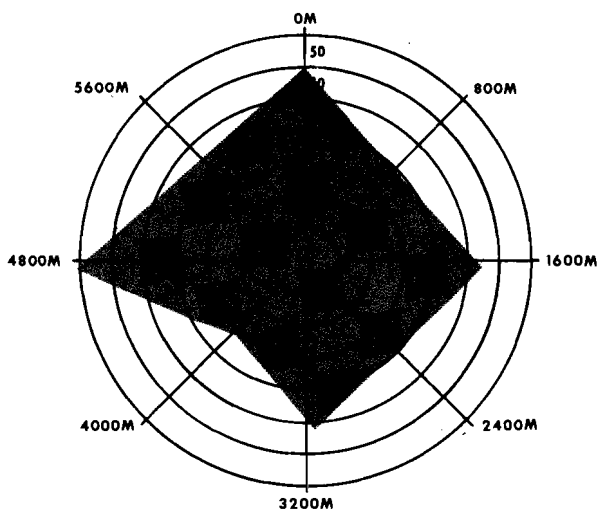

CONDITIONS:

Altitude _____

Speed _____

Weapons _____

RECOMMENDATIONS:

Heading In 4000 MILS

Figure 3. Flak clock

The data in this study on defense analysis must be employed with due consideration and appropriate evaluation in accordance with the assumptions which provide the limiting factors. For operational planning purposes, such factors as surprise attack, limits of visibility, suppressive fires, variations from absolute straight and level course, or evasive tactics will, of course, degrade the effectiveness of the antiaircraft weapons in proportion to the degree that these factors are involved.

The above is a rapid discussion of the importance of defense analysis and what is being taught to our advanced course students. It is not a final solution, but it is better than flying in blind; oblivious to all antiaircraft artillery fires. At present, no division or corps staff organization is set up to do the research and development of defense analysis procedures and tactics, although defense analysis, when employed, can save the lives of many air crews and prevent loss of valuable equipment. Experiences during World War II have provided us with concrete proof that flak analysis will save aircraft. During World War II, 25 times as many US aircraft were damaged by enemy flak as were damaged by enemy fighters and 88 percent of all attacking aircraft received flak damage (9th Air Force data, Sep 44 - May 45). Due to the improvement of the quality and quantity of flak intelligence and the use of antiflak tactics, these losses were decreased to well below acceptable planning levels. So it is obvious that defense analysis can accomplish the same thing. Now we need to develop a better system, one that can provide a speedier and more accurate solution based upon all enemy gun systems and tactics and one that can be applied to our own air defense systems. At this time, only the surface has been scratched in this field; much work still has to be accomplished. Air Defense Artillery has seen the importance of enemy gun defense analysis and, since branch personnel have a requirement for training in forward area weapons and missile defense design, this instruction becomes an integral part of their career development. Continued improvement in this area is planned. However, in all branches, our G2/S2 and G3/S3 planning must include a study of enemy air defense capabilities with appropriate countermeasures to reduce friendly aircraft losses. This should not only include flak suppression or how to destroy these defenses, but determination of route and target priorities based on sound planning and tactics. These defense analysis procedures will do this. Detailed research, then, is required in this field. Research areas should include the need for, and content of, field manuals, intelligence digests on enemy gun data, and improved programs of instruction for all combat arms. The air battles of the future will exact a heavy toll in aircraft unless we can accurately analyze enemy air defense positions and devise appropriate countermeasures.

Realistic Training Devices for Forward Area Air Defense Weapons

Lieutenant Colonel Mills A. Riddick
Project Officer, US Army Training Device Agency
Naval Training Device Center
Orlando, Florida 32813

Effective training devices for the low-to-medium and medium-to-high altitude air defense missile systems have been used for a number of years. Air defense missile crews have used sophisticated trainers since 1955 when the 15D2 target simulator was developed by the Army Participation Group of the Naval Training Device Center (now the Army Training Device Agency).

As air defense weaponry becomes more sophisticated, the training devices designed to train personnel in weapon employment must necessarily become more complex. This is particularly true in air defense (AD) forward area weapons (FAW) training. With the development of Redeye, our combat soldiers found themselves in an electronic environment which was relatively new to most of them. No longer would the front line soldier fire only conventional small arms and machineguns at hostile aircraft, but rather he had suddenly entered the missile age! To the average doughboy this was a startling turn of events for which he was not prepared. Fortunately, however, the US Army Air Defense School, Fort Bliss, Texas, had foreseen the training problems involved and in 1963 initiated the requirement for an elaborate training device, the Redeye Moving Target Simulator (MTS).

The Redeye MTS small development requirement was approved in June 1965; and after much research and problem solving, the first prototype device was fielded in 1969 at Fort Bliss. Four production simulators have since been installed at Fort Bliss and have been available for Redeye training since January 1972. Additional simulators are scheduled for installation overseas and at several military posts in continental United States to provide training for Redeye gunners assigned to US Army divisions.

The MTS presents the gunner with a realistic target image projected by a 16-mm movie projector on a spherical background 180° in azimuth and 90° in elevation. The simulators are equipped with 11 reels of 20 target trajectories each, thereby enabling simulated engagements against low-, medium-, and high-performance aircraft. Additional realism is provided by suitable sound track.

The MTS automatically superimposes an invisible spot of infrared energy on the aircraft image at the appropriate time in each trajectory. Redeye gunner trainees use a tracking head trainer to acquire and track the target image and practice proper engagement procedures up to the point of simulated missile launch. The trainees actions are closely monitored throughout the engagement sequence by an instructor who has information on the important parameters—IR on, target within launch boundary, hold fire, cease fire, etc.—thereby permitting a thorough evaluation of student performance. With two students actively participating in each target presentation, approximately 50 student exercises can be completed for each hour of MTS operation. Because all training is conducted indoors and the device is not affected by

weather or range conditions, training continuity is not interrupted or delayed. Further, the cost per student per course run is minimal when compared with actual aircraft or drone flights and range operating expenses.

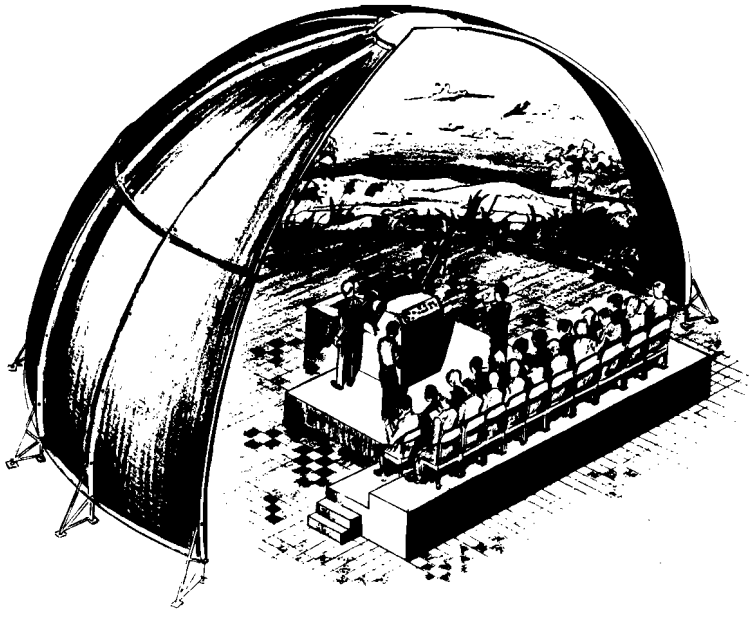

Redeye moving target simulator device X12A11.

While Redeye training has been greatly enhanced by having the MTS and the tracking head trainer, other recently fielded FAW have not been so blessed. Although several training devices are currently under development, Chaparral/Vulcan gunner training, up to this point, has been restricted by the absence of effective training devices. However, it must be quickly pointed out that this discrepancy is not due to a lack of foresight on the part of planners. For example, DA-approved training devices requirements were available in July 1968 for Chaparral/Vulcan mount simulators to be used in conjunction with the Redeye MTS. It was envisioned that mount simulators would be emplaced in the Redeye MTS and training for Chaparral/Vulcan gunners conducted in essentially the same manner as currently conducted for Redeye gunners.

Why then do we find ourselves without simulators for Chaparral/Vulcan? There is a general reluctance to expend funds for simulators when money for actual hardware is in short supply. There is also a tendency to emphasize only the initial costs of training devices with little or no analysis of the ultimate savings and, more importantly, training effectiveness. This happens despite the fact that some of the Army's more expensive training devices have paid for themselves in 2 to 3 years by cost savings and/or cost avoidance. Additionally, some individuals believe that effective training can be conducted only on the actual tactical equipment. They consider training devices an inadequate and undesirable substitute for the real thing. In times of virtually unlimited resources, depending on the type of training, this attitude may have some validity; however, in times of austerity, effective low-cost training methods should be sought and developed.

What are the potential advantages of training devices for AD FAW?

First, training devices provide a relatively inexpensive and effective method of conducting training when the costs of ammunition and operating expenses of tactical equipment are considered. For example, it is estimated the Redeye MTS saves approximately $8,000-$10,000 each week of training in high-performance aircraft flights alone. This is a significant cost avoidance saving.

Secondly, training devices provide an environment most suitable for adaptive training in that training conditions and procedures may be more rigidly controlled than by using operational equipment. Weather, for example, has absolutely no influence on Redeye training when the MTS is used. Operational equipment is designed to meet operational requirements which may not necessarily meet desired training requirements or standards. In many instances, simulators combined with tactical equipment have provided much more effective training than has combat equipment alone.

Lastly, innovative training devices enhance soldier interest. The modern day soldier is accustomed to sophisticated equipment; therefore, he finds training more enjoyable when exposed to training devices that stimulate interest. The interest span of the average trainee diminishes rapidly when archaic methods are employed. Conversely, interest is increased when exciting and meaningful devices and techniques are used. It is toward this end that we must orient our thinking. If by using effective training devices we can train our troops under better conditions at a lower cost, while at the same time stimulating interest, then we are remiss if we do not take this approach.

Manual AADCP for Redeye

Editor's Note:

Something new has been added to the 2-44-C22 course at the US Army Air Defense School. Student officers are organized into four-man teams and each team must study a selected subject and present an oral report on its findings. Topics may concern some existing aspect of air defense or some subject from the collective imagination of the team. In the report which follows a team consisting of Captain E.A. Koeltzow, Captain F. L. Caswell, Captain R. D. Hicks, and Captain E. S. Iaconis explored the theory of a manual AADCP for control of Redeye.

Our problem is to determine the changes necessary to the present manual Army Air Defense Command Post (AADCP), as described in FM 44-1-1, to make it suitable for use with the Redeye section. In solving the problem, we first made certain clarifying and limiting assumptions. First, due to visual acquisition requirement associated with the Redeye weapon system, targets will be engaged only during daytime operations (although nighttime operations in a limited sense and under emergency conditions are allowed for); second, we are concerned with a general type war with established battle lines; third, all of the targets will be inbound from the general direction of the forward edge of the battle area; and finally, the Redeye section will consist of from four to six teams, depending on the type of division to which it is attached.

We are not actually assuming a specific type of target, but for purposes of illustration throughout the discussion we have chosen an aircraft traveling at 450 knots. This is considered an optimum speed for low-level ordnance delivery. Since Redeye has a 5-kilometer acquisition range, a team would have less than 30 seconds to engage such a target. The nature of Redeye; i.e., limited time for an engagement decision, will necessitate extensive use of hold fire and weapons hold type commands to prevent, for example, engagement of rotary wing aircraft during a specific period, or to delineate directions of approach into a team's engagement zone which are not to be fired into during a specific period. These commands would be disseminated by the modified manual AADCP. Actual physical changes to the present manual AADCP cover three broad areas: communications, manning, and status boards.

Communications. Since the existing wire net would not be feasible because of the forward deployment and mobility of the teams, the logical replacement would be the TOE AN/GRC-160 radios in the Redeye section. These radios have a secure capability.

Manning. To stay within available personnel restrictions, AADCP manning would be reduced to three men. Readily available for the assignment is the three-man Redeye section headquarters. Remember, we are assuming daytime operations only. The section chief, an Air Defense Artillery lieutenant, would be the AADCP supervisor. The second man would have the responsibility of recording incoming information and intelligence from all nets and plotting it on the status board. He would also maintain the weapons count. The third man would pass pertinent information to the teams, using a clock system to identify incoming hostile targets. He would also log information from higher headquarters as well as his own teams. The lieutenant, when present, could assist in the performance of these duties, but the simplicity of the system would free him for supervisory duties with his Redeye teams. The location of the AADCP in the maneuver battalion tactical operations center would facilitate acquiring an additional man should the situation demand it.

Status boards. The display board combines the operations, early warning, and tactical action boards of the manual AADCP. It is designed to be compatible with both the maneuver battalion and adjacent and higher air defense agencies, to include the Air Force.

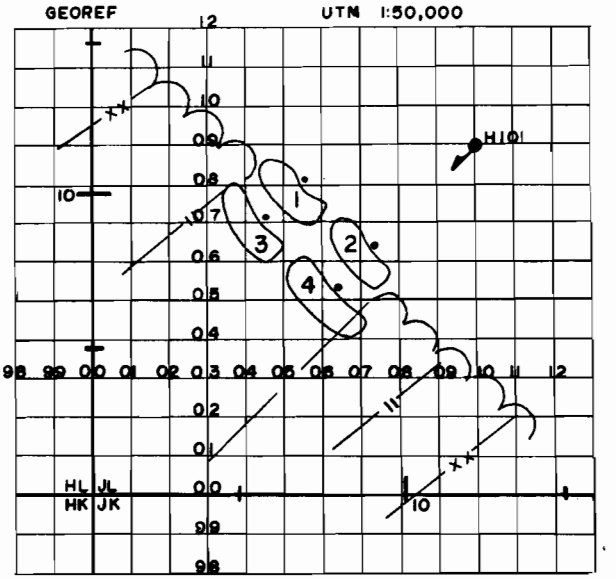

TAC ACTION

TGT NO	ID	POSITION	ALT/SPEED	ASSIGN
H101	H	JL 1213	08A/450	TEAM 2

TEAM STATUS

TEAM NO.	LOCATION (UTM)	WPN
1	057081	6
2	073064	4
3	045070	2
4	064054	6

Operations board (not to scale).

It is made by overlaying GEOREF and a Universal Transverse Mercator (UTM) grid 1:50,000 map on a plexiglass board. The UTM grid is used when reporting team locations, enemy positions, and other information necessary for coordination within the division. The GEOREF is used for early warning of enemy aircraft, no-fire zones, and other information necessary for coordination with air defense agencies.

Target information would come from the best available source; e.g., the air defense net, logistics net, or Air Force early warning radar. Target information would be passed from the maneuver battalion to each Redeye team in a clock format with the clock always oriented to 12 o'clock north. This clock format would eliminate the requirement for the Redeye team to try to correlate a target's rapidly-changing position on a map. For example, from the illustration: "Team 2 this is maneuver battalion. Target inbound at 1 o'clock."

Information adjacent to the board includes target information (target number, identification, location, speed, and altitude) and Redeye team status.

In summary, the manual AADCP is by nature slow, but in practice might prove faster than forward area alerting radar/tactical alerting data display set (FAAR/TADDS) and the matrix system. Its centralization would simplify destruction by the enemy; however, in this case the detailed SOP would become the primary means of control. The modified AADCP could prove indispensable in the passage of hold fire type instructions, either those initiated by higher headquarters or those deemed necessary and generated internally. In addition, it provides an efficient and logical means of controlling the section and its headquarters, as in the initiation of resupply requests. Also to its advantage is the fact that it is compatible with existing personnel in the section headquarters and with existing equipment in the present manual AADCP. It can be integrated with the Air Force and other higher agencies, such as other AADCP's, Chaparral/Vulcan battalions, and FAAR. (In comparison, FAAR cannot be so widely integrated.) The modified manual AADCP also provides more reliable early warning and is considerably less expensive than FAAR. In view of its obvious advantages, we recommend the modified manual AADCP as an excellent means of controlling the Redeye section.

Vidicon

Television electronics is now being employed to evaluate and train Vulcan gunners. The new system, known as Vidicon (fig 1) was produced by General Electric for US Army Weapons Command, Rock Island, Illinois, as an interim training device for Fort Bliss. Vidicon uses a closed-circuit television camera in conjunction with the Vulcan gun system. Fort Bliss has had six units in use for approximately 1 year. In addition the Army is developing a field version of the Vulcan Gunner Tracking Evaluator for issue in 1973 on the basis of one per Vulcan battery.

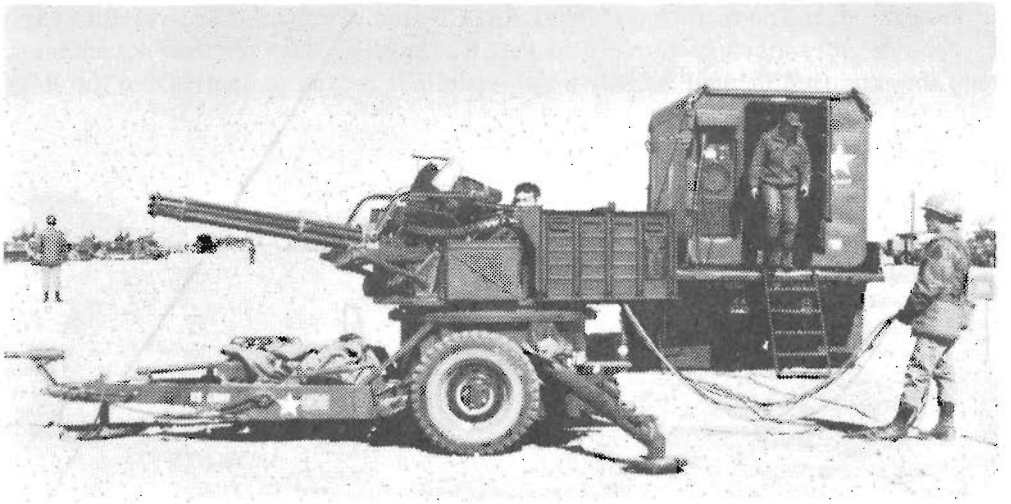

Figure 1. A towed Vulcan gun is hooked up to the Vidicon console which is housed in the van at the right.

With Vidicon, the Vulcan gunner tracks a target flying within range of his weapon, and an evaluator and other gunners monitor exactly what the gunner sees through his sight by observing either of two television monitors. A television camera mounted on the Vulcan sight transmits the Vulcan sight picture to the monitors in a van located as far as 150 feet from the gun. In effect, Vidicon allows the evaluator, through the use of TV cameras, to "sit in the gunner's seat." Thus, Vidicon monitors the gunner's tracking ability and his use of the controls as he tracks the aircraft (fig 2). The monitor console has a series of lamps which light to indicate the sequence of the operator's actions. These lamps show the selection of the mode of operation, activation of the action switches, radar radiating, radar lock-on, ready-to-fire status, and fire. The Vidicon console also registers electronic data from the Vulcan computer; e.g., target range, closing velocity, and lead angle. The system provides a continuous intercom voice link between the gunner and the evaluator (fig 3). The platoon leader evaluates the gunner's performance by watching the television monitor and the Vidicon console and provides corrective instruction through the voice link.

In a typical use of Vidicon at Fort Bliss each student gunner has an opportunity to use Vidicon to monitor other students performance. The students learn both from observation and their own performance in the Vulcan mount. A videotape record of each gunner trial can be made, allowing the instructor to play back any tracking exercise for corrective training.

Figure 2. An evaluator monitors one of the two television screens which form the Vidicon console, along with a videotape recorder, located between the TV screens. The evaluator can make spot corrections via telephone.

Figure 3. Vulcan gunner communicates with the Vidicon evaluator while tracking targets.

A scoresheet has been developed to record the proficiency of gunners in target acquisition, lock-on, acquisition time delay, tracking, and firing. This score sheet, available to training units, can be used to mark the progress of gunners during their training phase and, in later periods, to insure that they maintain their proficiency.

For more than 25 years the only method of evaluating automatic weapon gunners was to watch the trajectory of tracer rounds and approximate the accuracy of the fire. Now, with a TV camera relaying the Vulcan sight picture, the evaluator can see exactly what that gunner sees. When the gunner presses the trigger, the observer knows immediately whether or not he would have hit the target. In this way the evaluator(s) can tell whether a gunner is proficient in his job. Personnel who have used this sytem feel that the device is a valuable tool for training.

A report on development status and a description of the Vulcan Gunner Training Evaluator is planned for the next issue of Air Defense Trends.

US Military Academy Prep School

Successful completion of the US Military Academy preparatory school, which is located at Fort Belvoir, Virginia, makes one a candidate for admission to West Point. Final selections are made by the academy office of admissions.

Selection for attendance is on the best qualified basis. To be eligible for consideration, an applicant must be a citizen of the United States, of good moral character, and at least 17 but not more than 22 years of age on 1 July of the year he plans to enter West Point. Other requirements are that he be unmarried and not previously married, a high school graduate (preferably in the upper half of his graduating class, with 4 years of English and 3 years of mathematics), medically qualified (with any impairment of vision correctable to 20/20), and able to distinguish vivid red and green.

The USMAPS course is 10 months long—from August through May prior to entering the Military Academy. The program of instruction is divided into two phases. The first phase is a comprehensive review of high school English and mathematics designed to prepare the individual to take the college board examination.

The second phase provides instruction in advanced English and mathematics that will assist candidates in their studies at the Military Academy. The Preparatory School devotes only a small amount of time to formal military training, but an extensive sports and physical conditioning program is conducted.

How do you apply for admission to USMAPS? If you are on active duty, prepare an application using the format in figure 1, AR 351-12. Although the application need not be typed, it should be legible and all items of information must be included. Submit the application to your commanding officer who will interview you before indorsing your application to USMAPS. A legible copy of your most recent medical examination (Standard Forms 88 and 89) must be attached.

Your educational qualifications should be established by writing to the high school you graduated from and any colleges or commercial schools you attended and requesting that an official transcript of your credits be sent directly to the Commandant, USMAPS. Attach a copy of each letter requesting transcripts to your original application. Also, you must report to your post education center and take the School and College Ability Test (SCAT. Series II, Form 2A). The education center will send your scores directly to USMAPS.

Your application cannot be considered by the USMA admissions office until all items cited in AR 351-12 and subsequent correspondence from USMAPS are received. Your own initiative is necessary to insure that these requirements are accomplished prior to 1 June of the year entry to USMAPS is desired. If you are on active duty, the Preparatory School will acknowledge receipt of your application and inform you of items still required to complete your application. Final selection of applicants to attend is not begun until spring, and you may expect to be notified of your admission status by 15 June provided your application is completed in sufficient time. Prior to acceptance you may be assigned anywhere in the world. If you are a civilian, The Adjutant General will acknowledge your inquiry and inform you of your admission status.

You must have sufficient time remaining under your current term of service to carry you through July of the year following enrollment in the Preparatory School. If an extension is necessary, it will be accomplished prior to transfer to USMAPS.

If you are on active duty and desire further information concerning the program, write the Commandant, USMA Preparatory School, Fort Belvoir, Virginia 22060. Civilians should address inquiries to The Adjutant General, Department of the Army, Washington, D.C. 20314, ATTN: AGPB-M (Mr. Patton).

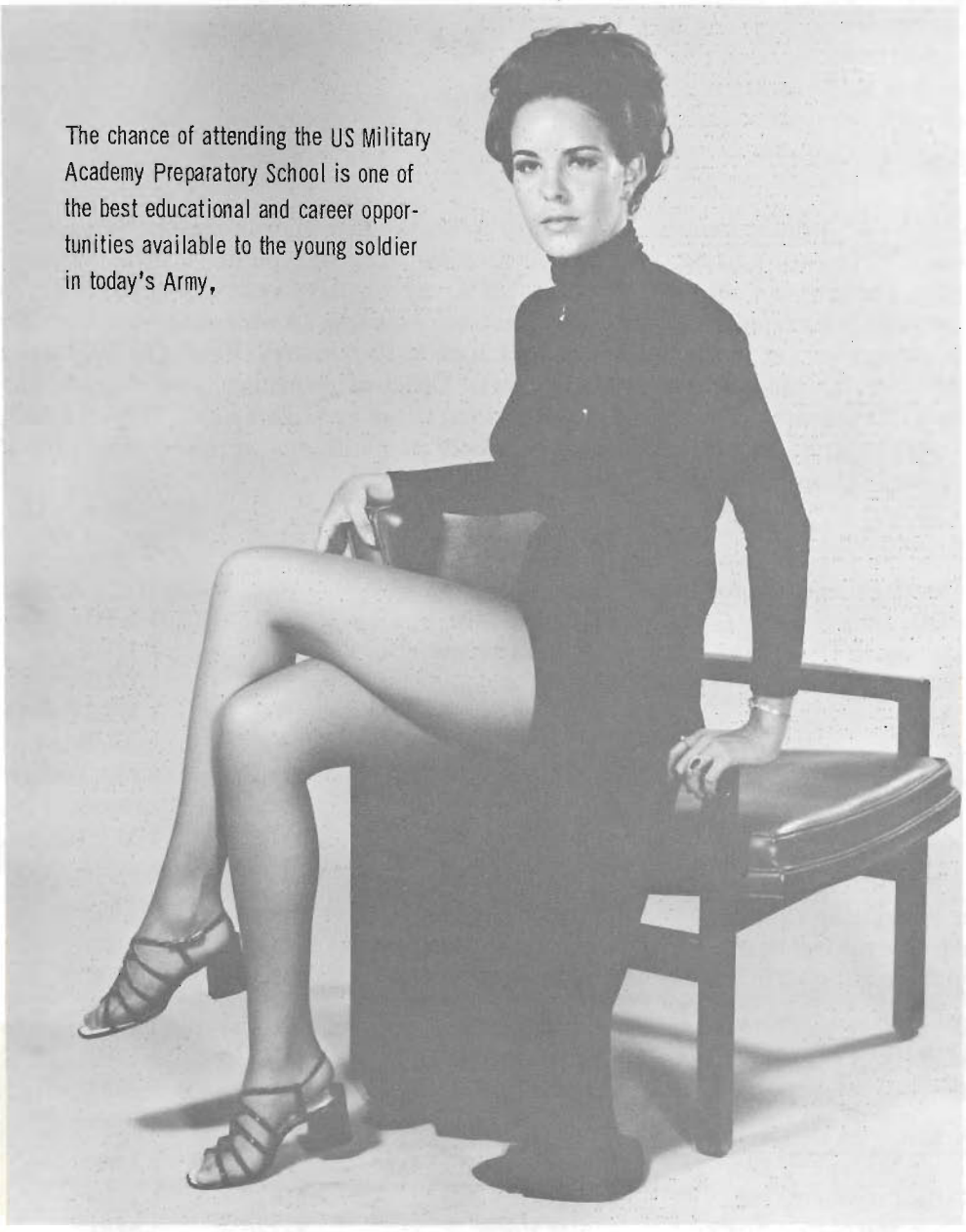

Did You Know?

Watch this space in each issue of Air Defense Trends for information emanating from the Air Defense Artillery Branch, Office of Personnel Operations, Department of the Army. Questions may be directed to the appropriate action officer where names and telephone numbers appear at the end of the related topic.

The information herein is the Air Defense Artillery Branch interpretation of current policies and programs. It is not an official Department of the Army publication.

—Ed.

OFFICER PERSONNEL

ASSIGNMENTS

ADA Field Grade Requirements. Experience indicates that approximately 50 percent of our field grade officers are getting their first choice for area or type duty. The primary reason that a better showing has not been made is that Army requirements will not support repetitive tours to popular geographical areas. To illustrate how few requirements for Fort Bliss or Colorado Springs we get in the branch, take a look at the January-February 1972 requisition cycle (excluding Washington staff assignments). Officers returning from overseas in December 1971-January 1972 were assigned to fill these requirements. Note the MOS and special requirements, as well as the fact that only four officers were required at Fort Bliss and only one at Colorado Springs.

Major command	Duty station	MOS	No. of requirements
Combat Developments Command			
HQ USACDC	Fort Belvoir	2162	4 LTC
USACDC	Fort Leavenworth	2162	2 LTC
USACDCEC	Fort Ord	2167	1 LTC
USACDCADA	Fort Bliss	8700	1 LTC (MS Degree OR/SA)
USACDCADA	Fort Bliss	47312	1 MAJ (MS Degree Physics)
USACDCADA	Fort Bliss	41181	1 MAJ (CGSC required)
US Army Recruiting Command			
HQ First Recruiting District	Fort Meade	2310	1 LTC
HQ Fourth Recruiting District	Fort Sam Houston	2310	1 LTC
US Army Recruiting Main Station	Baltimore	2310	1 LTC
CONARC			
HQ CONARC	Fort Monroe	2162	2 LTC
USAADS	Fort Bliss	1174	1 MAJ
US Army Materiel Command			
Ofc, Project Manager, SAM-D	Redstone Arsenal	1181	1 LTC
HQ, Missile Command	Redstone Arsenal	2167	1 LTC
Ofc, Project Manager, Army Technical Data Systems	Fort Hood	91120	1 MAJ

Major command	Duty station	MOS	No. of requirements
USARADCOM			
HQ, ARADCOM	Ent AFB	1181	1 LTC
ARADCOM Organizations (Not at Colorado Springs)		Various	4 LTC & 9 MAJ

(LTC Beck, OX3-1052)

The Short Tour Picture for ADA Captains. We are at last beginning to see a change to short tour turnaround time for air defense captains. For the past several years our captains remained in CONUS about 24 months before returning on an unaccompanied tour. This time span has now moved out to 30-36 months. Numerous officers placed on orders to Korea for their second unaccompanied tour have called in asking for a Vietnam assignment. The facts are that captain requirements for Vietnam in the last 6 months have been minimal. Korea requirements, however, have continued at a normal rate. It is anticipated that Vietnam requirements will continue to remain low and will be filled primarily on a voluntary basis. (Major Williams, OX3-1177)

Air Defense Warrant Officer Assigned to Branch. CW4 James D. Vaughn has assumed the duties of Assignment and Personnel Actions Officer for Air Defense Artillery Warrant Officers world-wide. Any ADA warrant officer who desires direct contact with his branch in reference to career development, assignments, or various personnel actions to include RA appointments, retirements, resignations, eliminations, or efficiency report screening may call CW4 Vaughn at OX3-1336 (commercial) or 223-1336 (AUTOVON).

Army Aviation Career Pattern. Army Regulation 600-105 describes the career program for the Army Aviation officer. In the past it has been very difficult to meet the objectives of the career program because of Vietnam requirements. As Vietnam requirements decrease, the necessity for you to consider and seek branch material assignments becomes essential. For the young aviator, the basic military development period is of utmost importance. The objectives that should be attained in your first 8 years of service are in AR 600-105 and are critical to your overall career development. Emphasis must be placed on troop duty and experience in Air Defense Artillery units. To prepare you for these assignments we make every effort to place aviators TDY to an appropriate weapons qualification course at the US Army Air Defense School prior to a branch material assignment. (Major Jernigan, OX3-1336)

EDUCATION

Command and General Staff College. A recent article in the Army Times noted that the number of spaces for CGSC-level schooling would be reduced in FY 1973. The numerical impact of this reduction on the branch cannot be determined accurately until the selection lists are published by Department of the Army. The branch had 106 officers selected for CGSC-level schooling in FY 1972, including alternates selected for attendance after the lists were released last December. (Lieutenant Colonel Myers, OX3-1390)

Advanced Degree Program for ROTC Instructor Duty (ADPRID) FY 1976 Spaces. DA Circular 621-7, 23 February 1971, contains full details concerning the program. Only plans for FY 1976 will be discussed here (these are not covered in the circular). Department of the Army plans to continue the ADPRID on into FY 1976; however, reserving of spaces with the OPD ROTC Board has not yet begun nor has a date been determined when nominations will be accepted. From experience we find that most of the choice spaces disappear within several weeks following the opening of nominations. A timely request may well be the key to obtaining a preferred choice. For this reason, the branch recommends that officers interested in the program for FY 1976 submit their requests NOW. These will be processed and, if approved, will be placed in a "deferred approval" status. When nominations open, branch will attempt to reserve a space of the applicant's choice. If successful, we will notify the officer and, at that point, begin action.

PERSONNEL ACTIONS

Warrant Officer Intermediate Course. Thirty of our warrant officers have been selected to attend the first intermediate course to be taught at the US Army Air Defense School, Fort Bliss, Texas. The course began 8 February 1972 and lasted 24 weeks. The purpose of the course was to provide selected warrant officers with a technological update on surface-to-air missile systems, information on missions and functions of the Army, and instruction in certain general military and missile related subjects. Congratulations to our selectees!

(Lieutenant Colonel Forte, OX3-1375)

Qualitative Improvement Actions. Improvement of officer quality involves the continual review and evaluation of officers and the release of those who fail to measure up to desired standards. With the reduction in strength required in the Officer Corps in FY 72, qualitative improvement actions take on an even greater importance. Summarized below are the significant qualitative reviews conducted by the Officer Personnel Directorate.

- All other than Regular Army officers are screened at the beginning of each fiscal year as required by paragraph 3-58a, AR 635-100. OPD recommendations are considered by the Department of the Army Active Duty Board (DAADB) for release.

- All Obligated Volunteer (OBV) officers who sign a voluntary indefinite (VI) service agreement prior to their 18th month active Federal commissioned service (AFCS) are screened by the branch at their 18th month of AFCS. Those whose manner of performance and potential do not measure up to the high standards desired of career officers have their VI agreement withdrawn by DA and are released at the end of their OBV tour.

- Regular Army officers are also subject to elimination based upon substandard performance, moral or professional dereliction, and in the interests of national security. Title 10 of the US Code establishes two separate systems. An RA officer who has less than 3 years of service in his component (RA) is referred to a selection board at TAGO which will advise the officer of its decision and afford him the opportunity to tender his resignation, submit

a rebuttal, or submit a statement that he does not desire to refute the allegations. This procedure does not normally require a board of inquiry or board of review. An RA officer who has over 3 years service will be required to "show cause" for retention before a board of inquiry appointed by his major commander. The rights, options, and procedures for these cases are quite lengthy and are contained in AR 635-100. There are a few points which should be highlighted: failure of RA officers to keep pace in temporary promotions is cause to be considered for elimination action; elimination cases can be initiated by both the career branch and field; and final approval is vested by law in the Secretary of the Army.

(Major Riley, OX3-1375)

Warrant Officers Long-Range Active Duty Program, Fiscal Year 1973. The Department of the Army Active Duty Board, which was convened for the purpose of making selections for the FY 73 Long-Range Active Duty Program, has adjourned. In previous programs, 5 years of warrant officer service were required for consideration. The program was changed this year and all nonregular warrant officers with 18 or more years service were considered for retention to 30 years of active duty. Those warrant officers considered have been notified of their selection or nonselection by The Adjutant General.

(Lieutenant Colonel Forte, OX3-1375)

Revised Officer Performance Report (ROPR). The testing of the new efficiency report (to be called a performance report) and supporting documents continues. We are now at the stage where evaluation is being conducted at Department of the Army. In the near future, the ROPR will be studied by a DA selection board, and, subsequent to that, the test task group will finalize the report. The major changes proposed for incorporation in the ROPR are as follows. The report is prepared in three copies, and one copy is provided to the rated officer. More extensive use is made of computer input. A composite score is contained on the report itself. The numerical portion of the ROPR consists of two scales—one for performance, which has a maximum score of 70 points each for the rater and the reviewer; and one scale for potential, with a maximum of 30 points each for the rater and reviewer. The maximum total score on the report is 200 points. There is no indorser on the ROPR, and the reviewer has the option of rating when the rater does not use the extremes of the rating scales. The ROPR has no numerical scales for personal qualities or performance of duty factors, but instead contains a subjective portion with specific questions designed to elicit information on these qualities and factors. Keep in mind that we are still in the evaluation phase, and the final product may not bear any resemblance to the report described above.

(Major Riley, OX3-1390)

BRANCH STRENGTH

The latest strength of the Air Defense Artillery Branch is:

Colonels - 264	Captains - 1,488
Lieutenant Colonels - 767	Lieutenants - 1,037
Majors - 864	Warrant Officers - 856

Total - 5,276

ENLISTED PERSONNEL

Your Preference. Your preference of assignment is maintained on file at DA and, contrary to popular belief, is considered when you are selected for an assignment. The enlisted master tape record (EMTR) is the automatic data file for all enlisted men. Your first preference for CONUS area and oversea area of assignment is recorded on the EMTR. Senior enlisted, Military Intelligence (MI), and special category personnel have hard copy files within EPD which also contain their preferences.

The question is, are the recorded preferences the same on both files and are they up-to-date? It is common knowledge that you submit a DA Form 2635 (Enlisted Preference Statement) to make your desires known. However, we often overlook the necessary action to insure that the automated file contains this information. Why is that necessary? Senior NCO, MI, and special category personnel are nominated for assignment by an automated assignment selection system (CAP III) which automatically considers their choice as it is recorded on the EMTR. Therefore, if it isn't there or is incorrect, one's current choice cannot be considered in the automated mode.

For E6 and below, the assignment selection system cannot consider your choice unless that data item is available. If you are overseas, it will be included in the advance oversea returnee (AOR) report, which will update the EMTR. However, because you normally will not have hard copy records in EPD, the only other source for this information is the EMTR.

So what can you do about it? First, make sure that your choice for CONUS area and oversea area assignment is correctly entered on your Form 20 in Item 42 (remarks). Second, if you are being reported on the AOR report, make sure your personnel office has your latest desires. Finally, when you put in a new DA Form 2635, drop by your personnel office so they can record your first choice and update your automated file along with the change to your Form 20.

Career Management - Your OPO File. It is an unfortunate fact that some individuals learn too late that they were not selected for a school, promotion, or an assignment because the OPO file did not contain all pertinent information or records. What can the senior grade soldier do to insure that his OPO file accurately portrays the most complete and up-to-date information? First, you are encouraged to visit the Office of Personnel Operations for the purpose of reviewing your OPO file. Bring with you extra copies of documents reflecting favorable information (letters of commendation, award citations, school certificates, etc.) and your Field 201 File if possible. You will be given assistance by an experienced personnel specialist during your visit. Senior grade personnel may review their files in Room 1C723 in the Pentagon. The Senior Enlisted Career Division, Enlisted Personnel Directorate, OPO, is the custodian of the OPO files and is also responsible for the assignment of senior grade personnel. Second, you may designate another soldier to review your file for you. Your representative must bring a letter of authorization with your signature before he will be allowed to inspect the contents of your OPO file. Third, you may forward to OPO any documentation which you feel is pertinent to management decisions rendered at DA. With the exception of the Enlisted Qualification Record (DA Form 20), documents should be reproduced copies which can be easily read. A true copy of DA Form 20 is required for extensive usage by career managers and the various DA boards. If there is any doubt as to whether a document is present in your OPO file, send OPO a reproduced copy. Documents should be

mailed to HQDA (DAPO-EPC-SR), WASH DC 20310. Finally, you may furnish a checklist of documents to the above address if you are unable to review your OPO file by personal visit or to designate another person to review your file.

Your checklist may look something like this:

OPO File Checklist (Example)

	YES	NO
Enlisted Qualification Record (DA Form 20)	____	____
Preference Statement	____	____
Photograph	____	____
Letters of Commendation		
1. HQ, Co A, 3d Bn, 27th Inf, 3 Jan 69, signed CPT Doe	____	____
School Certificate, USAINTS, Ft Holabird, MD	____	____
Certificate of Achievement, Operations and Intelligence Course, US Army Special Warfare Center, Ft Bragg, NC	____	____

Volunteering. Volunteering for Vietnam? Applications for Vietnam are being delayed due to errors. Applications must be completed in accordance with AR 614-30. The most common recurring errors are incorrect conduct and efficiency ratings and the omission of essential statements. Correct ratings are excellent, good, fair, or unsatisfactory. Applications containing fair or unsatisfactory ratings should have an explanation of the rating.

The following statements must be included with your application.

> "I (have) (do not have) another family member currently assigned in or on orders to Vietnam. I (do) (do not) qualify as a sole surviving son under the provisions of AR 614-75 or for exemption as the result of another member of my family having been killed in or having died as a result of service in Vietnam or another area currently designated as a hostile fire zone."

When either (or both) of the foregoing statements is affirmative, the following statement must be added:

> "I hereby waive my right to retention in CONUS or other oversea area in which I am assigned in order to serve in Vietnam."

Volunteer applications for Vietnam that reach DA correctly will be processed immediately. If they are incorrect, they cannot be processed until corrections are made or the missing data is provided.

MOS Evaluation Score Inquiries. Soldiers desiring information regarding their MOS evaluation scores should consult their local test control officer (TCO) for assistance. Individual

telephone inquiries made directly to the Enlisted Evaluation Center, Fort Benjamin Harrison, Indiana, often result in delays in obtaining an answer when the individual does not have sufficient information, such as the TCO roster number and the date the documents were submitted. Many questions can be answered locally since the Enlisted Evaluation Center provides test results to the TCO as they are processed. The TCO is also notified of any discrepancies in the EER or MOS tests which have been returned for correction.

Career Management and Development Program for Army Enlisted ADP Personnel. A formal Career Management and Development Program for the Army's enlisted automatic data processing personnel began in January at HQ DA. The objective of this program is to establish, develop, and maintain a broad professional base of highly trained and experienced enlisted data processing personnel for the Army. Specifically, the program will provide a centralized system at HQ DA for intensive management of the Army's enlisted ADP resources to:

- Improve the enlisted ADP capability of the Department of the Army.

- Insure the availability of highly skilled enlisted personnel to fill positions in the Army Management Information Systems (AMIS) Program.

- Provide for career management on an individual name basis for program members.

- Schedule appropriate training for individuals in the ADP program during established timeframes throughout their Army career.

- Develop a system for analyzing qualifications of personnel to ascertain their potential for increased responsibilities in higher grades and positions.

- Enhance opportunities and incentives to increase retention of qualified ADP personnel within the Army.

All active duty enlisted personnel with ADP MOS 34 and 74 career groups are members of the program. OPO (EPD) is responsible for operating the program which is authorized by Change 5 to AR 614-200.

What Do You Suppose He Meant By That?

Editor's Note:

Prepared from a presentation developed by Major John W. Wilson, Captain J. Ferrara, Captain P. L. Geisbert, and Captain I. T. Patterson of 2-44-C22 class No. 5, 1971.

Ever since the Biblical account of the Babylonians' attempt to build a tower reaching up to Heaven and the penalty exacted for this foolishness resulting in the confounding of their previously monolingual world (Genesis 11:7), what a word means to any one individual in a particular situation has oftentimes presented a serious problem.

Words, after all, are only pictures intended to convey a thought. However, the thought conveyed is not always as clear as one would desire. The discussion could start very simply with homonyms—words that sound alike—such as sail or sale, bear or bare, and would or wood. From these elementary examples one can readily expand his thinking to include numerous forms and variations, taking into account technical, medical, or laymen's word usages, as well as differences in pronunciation caused by ethnic or geographical factors.

When the area of warfare, be it offensive or defensive, is entered, the meaning or intent of one word may spell the difference in human lives. Primarily for this reason, considerable effort is being expended toward the standardization of terms within the Armed Services. To say that such an undertaking is fraught with difficulties is an extreme understatement. Even in the relatively narrow field of air defense we cannot get each of the Armed Services to agree on common definitions.

For example, the Joint Chiefs of Staff define air defense as "All measures designed to reduce or nullify the effectiveness of hostile acts by vehicles (including missiles) in the earth's envelope of atmosphere."

The NATO, SEATO, and CENTO definition of air defense is "All measures designed to nullify or reduce the effectiveness of the attack of aircraft or guided missiles in flight."

The US Navy/US Marine Corps definition of antiair warfare is " . . . that action required to destroy or reduce to an acceptable level the enemy air and missile threat. It includes such measures as the use of interceptors, bombers, antiaircraft guns, surface-to-air and air-to-air missiles, electronic countermeasures, and destruction of the air or missile threat both before and after it is launched. Other measures which are taken to minimize the effects of hostile action are: cover, concealment, dispersion, deception (including electronic), and mobility."

Not to imply that some differences in wordings would prove critical in the cited case, the example does illustrate that a problem exists when tacticians of different services or nationalities attempt to discuss a single issue in a common language. The problem of course is aggravated by translation. To examine the far-reaching question of standardization of terms

and terminology, three approaches were considered. In the first, the investigation centered on specific examples of terminology conflicts (or confusion) in four different situations:

- Within Army air defense with respect to other line branches. The best example in this case would be in the employment of forward area weapons, such as Chaparral/Vulcan, when used in support of infantry or armor operations. (Without some degree of standardization, these elements simply could not communicate with each other.)

- Within Army air defense with respect to different commands and oversea areas. Differences confronting an officer newly assigned to the 32d Army Air Defense Command (AADCOM) or the 38th Artillery Brigade (Air Defense) from the US Army Air Defense Command (ARADCOM) were considered.

- Within air defense with respect to US Army and US Air Force interface. Conflicts most commonly encountered at a North American Air Defense Command region control center in the continental United States were examined.

- Within air defense with respect to US and Allied doctrine, for example, in the North Atlantic Treaty Organization.

Given these four situations, the logical technique was to research the tactical standing operating procedures (TSOP) published by the various agencies. The research indicated sufficient terminology differences to substantiate the hypothesis that a problem does exist.

The second approach dealt with the security classification assigned various terms, or more specifically, the meanings associated with the terms. While the TSOP indicated that some terms not classified in one reference were carried in classified paragraphs in others (to include SECRET), the problem was not considered significant in itself.

The third approach was multifaceted and, in fact, was an outgrowth of the first two. To understand fully this last approach, one condition must be assumed: that the terms and terminology are standardized but are not being used correctly; i.e., not in accordance with the published standard in air defense operations. Again, three different situations were entertained.

- The correct or standard term was being used but was being associated with a different meaning.

- A different term was being used for a meaning already assigned a standard term.

- A standard term had not been implemented or an obsolete term was still being used.

Such an approach must be dealt with inductively and subjectively rather than with deductive reasoning processes and objectively. The reasons for a situation being categorized as above were narrowed to three:

- Perhaps the senior commander expressed or implied an individual preference for the use or nonuse of a particular term. In some cases this is pleaded as "commander's prerogatives."

• Perhaps an adopted term has not reached the field or the publication has not been read; i.e., ignorance of the term, justified or not.

• Tactical and strategic situations vary from theater to theater, making one term not really applicable to a particular command. The term is either too restrictive or too general.

Before entering the solution phase of the discussion, we should point out that the machinery for the standardization process is in existence and in operation today. For a joint service recommendation the Joint Chiefs of Staff distribute the proposed term or definition for staffing to all four US Armed Services for concurrence or nonconcurrence. Within the Army the task is channeled through The Adjutant General for comparison with existing definitions and terms in such documents as Army Regulation 310-25, then is normally sent to the Combat Developments Command for action. Their recommendation, if concurred in by Department of the Army, constitutes the Army's position. The final action is inclusion in JCS Publication No. 1, Dictionary of United States Military Terms for Joint Usage. Sister services have similar processes. Of an international note, a Quadri-Partite Conference was established in 1964 with the United States, Canada, Britain, and Australia as members. Similarly, a study group is in operation to produce a NATO glossary.

Basically, the problem resolves to this:

• Terminology needs to be standardized to assure that all commanders are "talking the same language."

• Machinery is in operation; terms are being standardized.

• Tactical air defense personnel must be properly oriented to use the prescribed terminology and in context with the appropriate definition.

So it is with the latter point that we are primarily concerned for our solution. First of all, at least as far as air defense is concerned, there must be a central or designated authority for terms and doctrine. The logical residence for this authority is the US Army Air Defense School at Fort Bliss, Texas. Not only would this designation provide for the School as a "clearing house" for all air defense matters, but it would greatly enhance the prestige of the School and the Air Defense Artillery branch as a whole. There is no doubt that Fort Benning is <u>the</u> infantry center and that Fort Knox is <u>the</u> home of armor. Air Defense Artillery, on the other hand, although a relatively new branch, has been buffeted back and forth between all the major air defense commands worldwide, and, in particular, Army Air Defense Command.

Once we have this central authority established and recognized, substantial progress can be achieved. The vehicle is simple enough. It is used advantageously by Department of the Army in furtherance of its programs and projects. In short, the proposal consists of mobile training or contact teams. Their purposes are to:

• Brief all commanders (from generals down to platoon level, officers and enlisted commanders) of changes in terminology or doctrine, or the meanings and terminology published in existing references.

• Convince the commanders at all levels of the importance and benefits to be gained from strict adherence to standard terms, standard definitions or meanings, and common doctrine.

Once the commanders are sold on the product, the command will buy it. This is the big job. Ammunition in the sales pitch has already been alluded to, but can include reference to a smooth multiservice interface, a smooth US-Allied interface, less delay in the effective use of personnel assets, transferring from one theater to another (by elimination of the training, untraining, retraining cycle), and the standardization of evaluation techniques and ratings (for example, in annual service practice; and inspections by multiservice teams, as in DASA TPI's, and DA, theater, or command evaluations). Less turmoil at high command levels will certainly result in higher efficiency at user unit levels, and the probability of error will undoubtedly decrease.

While it is true that we will probably have some problems as long as there is a need for air defense; indeed, until the prophesied time when we shall speak the same pure language throughout the world (Zephaniah 3:9), the importance of standardization of terms and meanings cannot be understated. The need exists. The apparatus to service the need exists. Now the objective is to mitigate the need as much as possible by exercising the apparatus and effectively using the products derived therefrom.

AIR DEFENSE CENTER TEAM MINUTES

Editor's Note:

The Air Defense Center Team, whose membership consists of the Commanding General, US Army Air Defense Center and Fort Bliss; Assistant Commandant, US Army Air Defense School; Commanding Officer, US Army Combat Developments Command Air Defense Agency; President, US Army Air Defense Board; and Chief, US Army Air Defense Human Research Unit, meets regularly each month to discuss significant topics of broad interest to air defense artillery in particular and to the Army in general. Other services also become involved. It has been decided, therefore, that unclassified information about Center Team activities should be made readily available to interested commands and agencies. To accomplish this action, beginning with this issue, abridged copies of Air Defense Center Team Minutes will be published in Air Defense Trends.

Requests for additional information should be addressed to Commandant, US Army Air Defense School, ATTN: ATSAD-DL-D, Fort Bliss, Texas 79916. Point of contact is the Center Team Coordinator, AUTOVON 978-5003/2481.

ADVANCED MATERIEL CONCEPT AGENCY (AMCA) BRIEFING (From minutes of 14 Oct 71.)

The Director, Air Defense Center Team, explained that the Advanced Concepts Organization (ACO) was established to use technological capabilities in a more creative way in the concept formulation and system optimization role in combat developments. Also, the Assistant Chief of Staff for Force Development, Department of the Army, recommended that AMCA conduct annual seminars at each Center Team location to acquaint the schools, collocated US Army Combat Developments Command (USACDC) agencies, and US Army Materiel Command (USAMC) elements with the latest state of the art and forecasted availability dates for specific technological applications in combat developments relative to Center Team interest. The Center Team Director then introduced Dr. J. V. Richard Kaufman, Deputy Director of Research, Development, and Engineering of USAMC.

Dr. Kaufman emphasized that the ACO was experimental and has no unit head. Although each of the three agencies is considered equal, it turns out that the Concepts and Force Design Group takes the lead because this group must produce the land combat systems for users. Dr. Kaufman then introduced Dr. George K. Hess, Director of AMCA.

Dr. Hess described the ACO as follows: "Three separate organizational elements comprise the ACO. First is the Concepts and Force Design Group (CONFOR GP) of the Combat Developments Command, until recently known as the Institute of Land Combat. Its mission includes the conduct of land combat system studies out to 20 years in the future. A second element is the Intelligence Threat Analysis Detachment of the Office of the Assistant Chief of Staff for

Intelligence, Department of the Army, which supports ACO units with threat forecast information and acts as the "devil's advocate" as seen from the adversary's position. The third element is the Advanced Materiel Concepts Agency (AMCA), which represents USAMC. AMCA has the mission of providing plausible materiel concepts with which future forces could be equipped." Dr. Hess then introduced the other members of the briefing team and their subjects.

Lieutenant Colonel Phillip Eliot from CONFOR GP discussed the operational requirements that the user thinks may be satisfied by materiel.

Mr. Frank Milner, Chief of the Science and Technology Directorate, AMCA, described materiel concepts related to command and control and mobility.

Mr. John Gensior, Chief, Firepower Division, AMCA, described materiel concepts related to firepower, low-altitude air defense systems, and defeat of armor.

Dr. Hess summarized the presentation, stating that the Land Combat Systems Study will be published in the fall of 1972. He requested comments and criticisms.

Discussion. ACO was urged not to let the new materiel concept on airspace coordination get ahead of related doctrine development. In this regard, materiel should not drive doctrine; rather, doctrine should be the basis for materiel development.

Dr. Hess requested that he be provided any information regarding the Air Defense Center Team position on airspace coordination. A draft of the proposed Air Defense Center Team position was provided following the conference.

It was recommended that the coverage afforded by LOFAADS, shown during the briefing, be compared with the Improved Chaparral coverage as opposed to that of the present Chaparral system.

The concept of trying to make weapons do multiple tasks; e.g., ground role and air defense role, was discussed. It was felt that the result would be that the weapon would not accomplish either very well. There is a fallacy in trying to make a weapon system do more than one thing.

Other comments from the floor were classified.

USAREUR FIELD TRIP (From minutes of 14 Oct 71.)

Colonel Raymon C. Barlow, DCO, US Army Combat Developments Command Air Defense Agency (USACDCADA), introduced Lieutenant Colonel Marsden P. Earle, who presented a briefing on division air defense in Europe based on a recent field trip to USAREUR.

The purpose of the trip was twofold: first, to obtain data necessary to formulate a valid test plan for a division air defense troop test; and second, to enable direct updating between the user and the CDC representative on current ADA field conditions and projected materiel developments.

USACDCADA Team Observations.

- That an air defense troop test is desirable; however, it does not appear feasible at this time under current circumstances.

- That, in addition to providing field training devices, a team should be considered to conduct standardized air defense ATT's or ORTT's.

- That, where possible and appropriate, representatives from the Air Defense Center Team should monitor air defense evaluation firings and exercises in USAREUR.

- That Aggressor air activity should be included in all CPX's and FTX's.

- That consideration should be given to reevaluation of the Chaparral/Vulcan (C/V) maintenance concept.

- That an early warning net is essential.

- That inclusion of the airspace coordination element in tactical operations centers of divisions and corps has highlighted the importance of developing practical procedures for the regulation of airspace.

IMPLEMENTATION OF AR 70-10, TEST EVALUATION DURING DEVELOPMENT AND ACQUISITION OF MATERIEL (From minutes of 22 Nov 71.)

The Director, Air Defense Center Team, opened the conference stating that recent revisions of AR 70-10 have increased the responsibilities of the Center Team relative to development, testing, and acquisition of materiel. The purpose of the conference was to provide Colonel William H. Holcombe, Jr, President, US Army Air Defense Board (USARADBD), the opportunity to present USARADBD's proposed testing procedures under the revised regulation on Expanded Service Test (EST)/Developmental Suitability Test (DST), and to present to the Center Team for approval a Memorandum of Agreement (MOA) delineating responsibilities of Center Team members and procedures for conducting EST/DST.

Colonel Holcombe's briefing included the following salient points:

- Department of the Army has established a directorate for test and evaluation under the Assistant Chief of Staff for Force Development. The US Army Combat Developments Command is in the process of expanding its headquarters and agency levels for the same purpose. Both actions add emphasis to the EST/DST program.

- The same flowchart is used for both EST/DST based on the revised AR 70-10; therefore, planning, procedures, and responsibilities for each test are the same. The probability of conducting a DST at Fort Bliss is very remote but must be provided for along with the EST.

- A planning committee representing Center Team members may be used to reach agreements on test plans for conducting EST/DST. This principle was used by the Infantry Board

at Fort Benning, Georgia, in preliminary planning for an EST on Dragon in December 1971. Support requirements have increased tremendously with implementation of the EST/DST and the USARADBD will require the assistance of each Center Team agency to properly conduct these tests.

•Responsibilities and procedures for the planning and conduct of EST/DST are contained in the draft MOA.

Discussion. Because of last minute instructions received from HQ, USACDC, changes were recommended by US Army Combat Developments Command Air Defense Agency (USACDCADA).

It was agreed that representatives of USAADS, USARADBD, and USACDCADA would meet to consider the USACDCADA recommendations. The revised MOA would then be provided each Center Team member for coordination and approval. Revision was accomplished on 26 November, and the MOA was approved and signed on 3 December 1971.

AIRSPACE COORDINATION - A REQUIREMENT FOR MODERN WARFARE (From minutes of 3 Dec 71.)

The Commanding Officer, US Army Combat Developments Command Air Defense Agency (USACDCADA), introduced the subject as follows:

Until this century, the air over the battlefield was invaded only by the projectiles of the artillery and to a lesser degree by the lighter weapons of the infantry and cavalry. The introduction of military aircraft and the concurrent development of weapons to defend against air attack created a requirement for coordination. The proliferation of low-flying aircraft involved in airmobile operations has further complicated the problem.

While striving to protect the friendly force from attack by hostile aircraft, the Air Defense Artillery (ADA) must allow for continuing operations by friendly aircraft. ADA is designed to maintain a continuous combat capability, 24 hours a day.

Because ADA maintains a continuing interest in the problems of airspace coordination and is equipped to contribute to the solutions of the problems, certain actions initiated at Fort Bliss have improved the Army's capabilities in the area of airspace coordination. As a practical measure, we have collected and codified the procedures and techniques involved in airspace coordination with today's equipment, organization, and communications. Also, a conceptual study has been made to determine how equipment presently under development for ADA can be used in the future to improve the Army's capability on the three-dimensional battlefield. The assumptions under which the work was accomplished were: (1) that airspace coordination is a function of command, and (2) that close control is not feasible.

Major James J. Rudy, an Army aviator, was then introduced to discuss airspace coordination procedures and techniques that evolved into a Combat Developments Command (CDC) Training Text 44-10-1, Army Airspace Coordination Techniques. Major Rudy's presentation included the following points:

As an outgrowth of the Division Air Defense Study, a three-man study group developed a set of detailed rules and procedures for airspace coordination in the field army, entitled

Army Airspace Coordination Handbook. This handbook was distributed in March 1971 for review by concerned combined-arms CDC agencies and other selected reviewers, and the initial response was extremely favorable. Reviewers' comments were resolved or incorporated into a final version presently being distributed as a CDC training text. Pending additional use, exposure, and refinement, it is intended that this training text become a DA-approved field manual.

In summary, this example demonstrates that ADA can make valuable contributions to the commander and to the Army in the area of airspace coordination using present equipment, organizations, and communications.

Major Rudy introduced Mr. Joe Fries, USACDCADA doctrine specialist, to discuss the second action, a conceptual study made to determine how equipment presently under development for ADA can be used in the immediate future for airspace coordination.

Mr. Fries discussed the following points:

For purposes of the study, only forward area alerting radars (FAAR) organic to the division are used for target acquisition, although longer range ADA radars may be present in the division area.

The programed equipment included the FAAR, AN/TSQ-73, and the air traffic management system (ATMS) for the Army. When fielded, the AN/TSQ-73 will replace the AN/MSG-4. The ATMS is intended to moderate the current Army traffic management system.

Three options are offered for the proposed communications system for airspace coordination using the brigade airspace coordination element (BACE) and FAAR's.

- Option 1 adds an air traffic regulation specialist at selected FAAR's and could be fielded by 1972.

- In option 2, a midway option, a composite picture of FAAR information is provided to the division command and coordination channels using a radar netting system in conjunction with the FAAR's. This could be in the field by 1974.

- Option 3 combines the formerly separate ADA and air traffic regulation system into a joint airspace coordination center (JACC). A modified AN/TSQ-73 provides a composite picture of the air situation for the commander and results in a 50-percent reduction in equipment required, when compared with the initial communication system proposed for airspace coordination. This does not imply a 50-percent reduction in manning requirements, but there would be a substantial saving in manpower. This could be fielded by 1977.

The presentation was summarized as follows:

- Codification of procedures and techniques for today's equipment and organizations provides the basis for coordinated use of the airspace.

- ADA equipment and organizations can make further significant contributions to the Army's combat capability on the three-dimensional battlefield.

• Our purpose has been to provide a more efficient service to the command to effect possible economics in ADA equipment and manpower.

MISSILE AND MUNITIONS EVALUATION, 1971 (MAME-71) REPORT, AIR DEFENSE MISSILE SYSTEM PORTION (From minutes of 13 Jan 72.)

The Director, US Army Air Defense Center Team, opened the conference, providing the following background information on MAME-71. Last year, from March to August, the Missile and Munitions Center Team at Redstone Arsenal used their joint command resources to conduct a field survey of worldwide missile and munitions support. The objective of the evaluation was to find out what is being done wrong in the field and then see what can be done to correct the deficiencies. The survey covered missiles, ammunition, and command and control across the board. The team visited air defense units in CONUS, Germany, Korea, Okinawa, and Alaska. Although the survey concentrated on direct support facilities, visits were made down to battery level to verify and amplify data pertaining to the logistics system.

The Center Team Director introduced Mr. Jack Matthews, a member of the survey team from the Missile and Munitions Center and School. Mr. Matthews stated that the purpose of the briefing was to provide a resume of the findings and recommendations of the air defense missile systems portion of the MAME-71 final report. His presentation included the following salient points.

Background. Individuals of all grades, MOS, and duty positions were contacted, so the report is basically an accumulation of problem areas reported by the people contacted. MAME-71 was jointly sponsored by USACDC, CONARC, and AMC, and the problem areas were considered in the three general areas of interest of the participating commands; i.e., doctrine and TOE organization (USACDC), training (CONARC), and materiel (AMC). Significant findings pertaining to air defense are summarized below.

Doctrine and TOE organization.

Three of five theaters effectively employ combined DS/GS units. The MAME-71 findings suggest that USACDC should develop doctrine to support a combined DS/GS operation. Dedicated missile supply depots also should be integrated into general support units.

Current doctrine for Class V missile maintenance should be made more specific.

The Hawk central maintenance facility in Korea represents an improved method for checking and repairing guidance packages and should be studied for possible application in other areas.

The 100-percent total mobility requirement for GS and DS units is unrealistic; consideration should be given to reducing the requirement for DS units to 50 percent (semimobile) and GS units to 30 percent (semifixed).

The survey findings indicated that positioning of the DS element as an organic part of the artillery battalion it supports results in a compromise of maintenance doctrine and degrades the effectiveness of support services rendered. The team recommended that Combat

Developments Command Maintenance Agency and Air Defense Agency jointly develop alternate means of providing logistic support to air defense missile units.

DSP TOE's for SP Hawk (44-256H) and basic Hawk (44-236G, w/C-7) should be revised to authorize clerks for production control, DX/shop stock, and equipment calibration records.

Augmented TOE's (44-236, 44-256, 44-536, 9-59) are needed to provide for quality assurance/quality control (QA/QC) and maintenance float equipment.

The study results suggest a requirement for an air defense "capper MOS" in the grade E-8, platoon sergeant.

Current air defense TOE's authorize two or more power generator mechanics (MOS 52B30) in each DSP at the repair section level. The field survey findings revealed that these men can be used more productively as power generation equipment repairmen (MOS 52D20) in the engineer section of the DSP.

The number of test equipment repairmen for GS units should be increased, with a proportionate decrease to DS units.

A 5-ton wrecker should be authorized for the Nike Hercules DS unit, and A-frames and forklifts are recommended for specific TOE's as provided in the report.

Expansion of DS mission, to include application and repair of test and measurement equipment and authorization for two signal repairmen in each platoon, is recommended.

Hawk DS units should be capable of load testing the superstructure of the loader-transporter and providing limited support for automotive repair.

Training.

Logistics and management instruction for ordnance officers, MOS 4515 and 4516, should be increased.

Senior artillery NCO's and warrant officers are sometimes converted to an ordnance MOS by OJT. The team recommended that all ordnance warrant officers and EM in "capper MOS" be Ordnance School-trained.

Nonresident training programs should be improved, and utilization of personnel completing such instruction should be emphasized.

Materiel.

A review board should be established to recommend revision of Hercules and Hawk missile systems stockage lists (MSSL).

A CONUS rebuild or theater refurbishment program should be provided for all Nike card readers for shop 3.

Improvements are needed in the processing of equipment improvement recommendations (EIR). The evaluation team advised against using the EIR digest for directing mandatory equipment changes.

The missile maintenance technicians (MMT) program should be retained; however, there is a need for specific guidance regarding training, screening, and control of the MMT.

The report identifies 23 support equipment additions or exchanges for Nike Hercules and 12 for the Hawk system.

A question and answer session was conducted at the end of the formal presentation and resulted in an excellent exchange of information. It was the consensus of those present that the informative report resulted in detailed and timely identification of possible air defense problem areas and provides the Center Team with invaluable information on which to base recommended improvements in air defense capabilities and effectiveness.

SEVEN-BARREL, 30-MM GUN AIR DEFENSE SYSTEM (From minutes of 10 Feb 72.)

The Director, US Army Air Defense Center Team, opened the conference, providing the following background information.

Since World War II, air defense guns have not rated high in the Army scheme of things. During the OCRD briefing here last week, Lieutenant Colonel Linka stated that in addition to getting out of the gun business until we jury-rigged the Vulcan, we also lost our expertise for developing guns and conducting tests and evaluations which would provide a basis for product improvements. This is not surprising because, like many of our problems, this situation was brought on by fiscal considerations. There was not enough money for both air defense missiles and guns, so the available dollars went for the newer, more glamorous missiles. Then came the 1960's and the reminder by the North Vietnamese that the unsophisticated gun can be an effective air defense weapon.

The briefings that follow will consider two aspects of the gun problem. First, an improved concept for an air defense gun system, followed by a report on what the Army is doing to reestablish a capability for evaluating the effectiveness and weaknesses of air defense gun systems so that we may design and develop product improvements.

The Center Team Director introduced Mr. Foster Cowey, Manager, Surface Weapons Application, the first of two briefers from General Electric (GE) Company. GE is investigating the feasibility of developing a multibarrel, 30-mm gun system for the low-altitude air defense role. Mr. Cowey's presentation included the following salient points:

GE gun air defense effectiveness studies, including computer modeling, began about 6 years ago. Computer models developed were EVADE I, II, and III, TAGWAR (Tactical Air Ground Warfare simulation), and HITS, a one-on-one system.

During the studies, consideration was given to wargaming, real terrain, fire units in tactical deployment, attack combinations by varying the number of aircraft and the number of guns, firing doctrine, and various gun systems effectiveness.

Concept formulation and prototyping of a gun air defense system began about a year and a half ago as a result of the effectiveness studies. Additionally, an improved gun servo-system was developed for the Navy's Phalanx shipboard system under a subcontract to General Dynamics.

Finally, a prototype gun air defense model, using the Vulcan as the base system with an added electro-optical tracking system and a much improved Phalanx servo system, was assembled and tested with effective results.

The gun was 30-mm, but this does not imply that this caliber is recommended for air defense because it could readily be changed. Agencies at China Lake, in addition to other activities, are trying to determine the optimum caliber ammunition to be used for air defense.

Two major objectives for prototyping the gun low-altitude air defense system are to develop and evaluate a gun air defense system and to fully exploit improved effectiveness offered by the latest technology in fire control sensors and digital processors.

If funds are provided by WECOM and range time is made available at Fort Bliss, GE should be able to bring the prototype system to Fort Bliss in June for testing.

Mr. Cowey introduced Mr. Herb Taylor who provided technical details of the prototype system.

Performance goals include day, night, and adverse weather capabilities, automatic detection and acquisition, multiple target track-while-scan capability, automatic situation storage and selective displays, automatic aids for threat evaluation, increased effective gun range, capability of engaging 1.5 radian/second targets, and an increased cumulative P_K on radial targets.

Major components of the fire control system include forward looking infrared (FLIR) scanner; laser ranger; digital computer and peripheral equipment; commander's display and control console; and a gunner's stabilized optical sight.

Four modes of operation for the system are automatic, IR tracking, visual tracking, and backup manual.

Ammunition options include high-explosive incendiary, semiarmor-piercing high-explosive, subcaliber high-explosive, and armor-piercing-discarding-sabot.

GUN AIR DEFENSE EFFECTIVENESS STUDY (GADES) (From minutes of 10 Feb 72.)

The Center Team Director introduced Dr. Robert B. Walljasper, Deputy Director of the GADES program from the US Army Weapons Command (WECOM), and Colonel William Arnold, AMC Chaparral/Vulcan Project Manager and Director of the GADES Review Board whose membership represents OCRD, USACDC, CONARC, and selected DA staff offices. Dr. Walljasper presented an overview and status report on the GADES program. GADES is the Army's effort to determine what is wrong with our present gun system, the Vulcan, and

what can be done about developing and fielding cost-effective improvements. Salient points of the briefing by Dr. Walljasper included the following:

The GADES program began approximately 2 years ago, when a WECOM panel was asked to evaluate the effectiveness of Vulcan. This initial evalution expanded into the GADES program with the following four objectives:

Identify quantitative effectiveness, reliability, and maintainability of Vulcan, in both the air defense and ground roles, by establishing the necessary data base and performing appropriate analyses for further evaluation as a part of the overall defense of the field army.

Determine the need for, and identify the most cost effective areas for, product improvement of the Vulcan system.

Provide a methodology base for assessing effectiveness of present and future gun systems using validated effectiveness and engineering simulation models.

Determine instrumentation, methodology, procedures, and documentation requirements for gun air defense testing.

The master plan for the study was approved 14 months ago and was to be completed in 25 months, but completion has been delayed pending acquisition of the miss-distance indicator (MDI) radar that will be used in the firing phase. Delivery of the MDI radar is scheduled for March 1973.

Seven major modeling tasks were identified: cost model, reliability model, engineering model, fire unit effectiveness (FUE) model, fire unit vulnerability (FUV) model, fire unit ground-role (FUG) model, and systems effectiveness/cost effectiveness (SE/CE) model.

Modeling was divided among the Army Materiel System Analysis Agency (AMSAA), WECOM, and TECOM.

Application of a dynamic simulator reduced or eliminated problems resulting from variable flight paths and range safety restrictions. Repeatability for verifying data was possible with the operator being the only variable in certain modeling experiments. The simulator provides programed target flight paths with the targets produced on a TV screen so that an operator can track them using the normal Vulcan sight. Instrumentation of given component inputs and outputs is also available. This has reduced the cost of the study considerably.

The threat was developed with the participation of CDC and the Air Defense Evaluation Board. It includes 15 flight paths limited to the range of the Vulcan and at altitudes below 5,000 feet.

Most of the modeling has been completed and the reports are now being finalized. The testing program is currently planned to be conducted at Fort Bliss when the MDI radar is available.

Colonel Arnold emphasized the need for an improved Vulcan or a new gun air defense system that has been completely evaluated; one that will hit a target taking evasive action.

82D AIRBORNE DIVISION AIR DEFENSE AND AIRSPACE COORDINATION BRIEFING (From minutes of 23 Mar 72.)

The briefing on air defense operations and airspace coordination within the 82d Airborne Division was presented and included the following points:

The 7th Battalion (Abn), 60th ADA, was activated 29 June 1970 at Fort Bliss as a three-battery battalion: a headquarters battery and two firing batteries. The colors were presented by General Richard T. Cassidy at a unique activation ceremony. The Vulcaneers jumped to a drop zone they had prepared, assembled, double-timed into position to receive the colors, and then passed in review.

Completing basic and advanced training, and a most successful ATT and maintenance inspection, the battalion moved to Fort Bragg on 17 December 1970 and was declared combat ready 15 February 1971.

Despite initial minor problems associated with the 3-month training cycle of the brigades within the 82d Airborne Division, the accomplishments of the ADA battalion resulted in the 82d Airborne Division becoming more air defense conscious. Shortly after arrival, the battalion demonstrated the versatility of the towed 20-mm Vulcan. The Vulcan was airlifted by a Huey helicopter, dropped from the G5A aircraft, and then successfully test fired. Initial range restrictions at Fort Bragg were relaxed by adjusting the range fans, and the ADA battalion was allowed to fire at aerial targets, including R-Cats and BATS. Night firings at aerial and ground targets, using high-explosive, incendiary, self-destruct ammunition, followed.

Two additional Vulcan batteries were activated 1 July 1971 concurrently with the receipt of the Gamma Goat as a prime mover. Subsequently, the battalion was tasked with the development of techniques and procedures necessary to integrate all divisional air defense resources into a highly responsive and effective anti-air package to include the use of the airspace over the division area of operations.

Initial action was the assignment of all division Redeye assets to the 7th Battalion for intensive training. After gaining field experience and after many discussions with all parties concerned, the present organization was formed. It consists basically of a battalion headquarters, headquarters and headquarters battery, and four Vulcan/Redeye batteries, with a brigade airspace coordination element (BACE) established in each brigade tactical operations center.

In accordance with the accepted practice of deploying a brigade size task force, three brigade anti-air packages were organized, one for each of the three infantry brigades. A fourth anti-air package, identical to the other three batteries, is provided for general support of the division installations or to operate as a brigade anti-air package in support of a separate or additional brigade.

The Vulcan/Redeye battery is the basic brigade anti-air package. Each battery has three identical platoons consisting of a platoon headquarters, four Vulcan squads, and three sections of four Redeye teams each. Habitually associated with a particular brigade, the anti-air package is available to that brigade commander for all intensified and mission training, to

include field training exercises and operational readiness training tests, and is immediately responsive for tactical deployment. Under this organization the ADA battery commander is also the adviser to the brigade commander in all air defense matters and is responsible for the operation of the BACE. Command and control is executed from section leaders all the way to the battalion operations center and includes control of the Redeye missile.

Major equipment changes proposed in the Redeye reorganization include the substitution of the AN/VRC-47 for the AN/GRC-160 which is unreliable for air defense command and control, and the addition of the AN/GRR-5 to provide a voice early warning net.

Prior to the reorganization, Redeye assets were an unknown quantity to the ground commander who lacked the knowledge and expertise to effectively train and employ them. This nonintegration of Redeye assets resulted in their random deployment. Under the present organization, all resources are centralized for training, deployment, and command and control. The Redeye assets are used to partially fill the gap which exists because the 82d Airborne Division does not possess the Chaparral air defense system.

The division airspace coordination element (DACE) and the BACE act as communications monitoring elements capable of receiving, plotting, and resolving conflicts between users of the division's airspace. The DACE/BACE system was organized into six functional areas: chief coordinator, tactical air support, air defense artillery, army aviation, indirect fire support, and naval gunfire. The DACE/BACE system is designed to operate from a small general purpose tent and is attached to the tactical operations centers of the division or brigade it is supporting. Data recorded on a backlighted clear plexiglass board by two plotters include ADA fire unit positions, artillery positions, operations overlays, boundaries, corridors, landing zones, and air defense intelligence data. Each functional element of the DACE/BACE has specific tasks. The chief coordinator is the coordinating authority, monitors all plotted airspace activities, resolves conflicts through appropriate authority, and keeps the G3/S3 advised of appropriate air defense intelligence and hostile air activities.

Initial opposition to the 82d Airborne Division's plan for airspace coordination, specifically by USAF elements, has declined since experience has shown that the DACE/BACE concept coordinates airspace activities required by Army elements at division level and below and does not infringe upon Air Force responsibilities. (The Air Force does not have the capability to coordinate airspace usage at this level.)

A discussion period following the briefing provided answers to specific questions by Air Defense Center Team members.

IMPROVED HAWK TESTING (From minutes of 13 Apr 72.)

The President, US Army Air Defense Board, emphasized the importance of the three evaluations of the Improved Hawk system to be conducted concurrently 1 May through 31 July 1972 by the USARADBD and US Army Combat Developments Command Air Defense Agency, assisted by Center Team agencies. The following information on Improved Hawk was provided.

The three evaluations to be conducted on the Improved Hawk are initial production test (IPT) by USARADBD, initial operational test and evaluation (IOTE) by USACDCADA, and expanded service test (EST) of the improved platoon command post (IPCP) by the Air Defense Center Team members.

The plan for testing is to satellite or "piggy-back" the IOTE and the EST around the IPT of the Improved Hawk battery. To reduce cost and conserve resources, IPT assets will be used to the maximum extent possible. The IPT is the "carrier-vehicle" with the overall objective of determining whether Improved Hawk production materiel is suitable for issue to the field. Specific objectives are to:

- Verify the adequacy of corrections to deficiencies and shortcomings reported during the service, arctic, and check tests of the Improved Hawk battery items.

- Confirm the completeness and adequacy of tools, test equipment, and technical manuals for use in the field.

- Evaluate the adequacy of the built-in test equipment (BITE) and the diagnostic computer program of the information coordination center (ICC).

- Evaluate the safety characteristics of the production materiel.

In addition to the objectives assigned by TECOM, the test plan provides for the evaluation of:

- The adequacy of the maintenance test package. This will be the first time that a complete maintenance test package will be available for testing.

- The interface between the AN/TPX-46 (IFF) and the AN/TPQ-29 (simulator) with the improved Hawk. This interface presented many problems during the temperate zone service test conducted in 1969.

Testing will be conducted in a simulated tactical environment with several days of 24-hour operation. Subjecting the equipment to field conditions while under test will provide data representative of that obtained from a tactical battery.

The recommendation concerning suitability must be based on the fact that the system can be operated and maintained by representative troops in a field environment. For this reason CONARC was requested to provide a basic Hawk battery less equipment. The unit, Battery A, 6th Battalion, 61st Artillery, has received 7 weeks of new equipment training by the contractor, followed by 4 weeks of OJT.

Tactical principles and concepts that affect overall air defense missile planning have been incorporated in both the test and plan scenario. These considerations include, but are not limited to:

- Air defense mission and objectives.

- Areas to be protected.

- Threat evaluation.

- Airspace control.

- Command and control.

- Firing techniques.

The IPT plan is divided into four major test areas: mobility, maintenance, target acquisition and fire control, and miscellaneous.

During mobility testing, 20 march orders and emplacements will be conducted under various conditions, to include three under blackout conditions. The system will be moved approximately 800 miles over all types of roads and terrain.

The maintenance test consists of basically nine subtests as specified by USATECOM Regulation 750-15. A complete maintenance test package, consisting of draft technical manuals, maintenance allocation charts, test equipment, toolkits, and a prescribed load list (PLL) of over 400 line items, will be provided the battery for maintenance and operations during the test.

Target acquisition and fire control tests will evaluate system effectiveness during simulated tactical engagements against maneuvering aircraft operating throughout the velocity spectrum of the system and at various altitudes in both ECM and non-ECM environments. Command and control will be exercised by the use of defense readiness conditions, air defense warnings, rules of engagement, various states of alert, and special control instructions, using centralized, decentralized, and autonomous methods of control.

The miscellaneous category includes subtests related to human engineering factors, safety, system effectiveness, missile handling, power requirements, simulator station AN/TPQ-29, and sustained operations.

The IOTE, to be conducted by USACDCADA, will provide an independent evaluation of the operational effectiveness and suitability of the Improved Hawk system.

The evaluations will not duplicate the USARADBD's testing, but will be based on close surveillance of the IPT and analysis of data obtained from the USARADBD.

Independent conclusions will be drawn from both the IOTE team's observations and data collected.

The overall objective of the EST of the IPCP is to determine if the IPCP is suitable for Army use. Major subobjectives will:

- Evaluate the complete operational performance of the IPCP under conditions outlined for the IPT.

- Determine tactical compatibility of the IPCP with the other major items of the improved assault fire unit (IAFU).

- Determine the tactical mobility and durability of the IPCP.

The USARADBD retains overall responsibility for the conduct of the EST with Center Team agencies participating in the evaluation of specific areas of interest as outlined in the Air Defense Center Team Agreement of 3 December 1971.

RAPIER TEST PROGRAM (From minutes of 13 Apr 72.)

A brief description of the Rapier air defense system was provided followed by a review of the planned test program. A description of the system follows.

Rapier is a lightweight, readily transportable, surface-to-air missile system developed by the British government to engage low-flying aircraft during fair weather daylight hours. An addition to the system, called "blindfire," is now under development by the British government to extend this capability to 24 hours and during low visibility. Command to line-of-sight guidance and a supersonic missile give the system the capability of engaging targets at low to medium altitudes. A direct-hitting missile is employed to give a high kill-to-hit ratio with a relatively small warhead. The principal components of this system include the launcher unit, tracker unit, and the power generator.

The launcher unit includes a coherent pulse-doppler acquisition radar providing continuous coverage with an antenna rotation of 60 rpm. An IFF antenna, attached to the acquisition radar antenna, provides automatic aircraft interrogation. The launcher unit also has four missile launcher rails which are automatically and continuously alined after target detection.

The target tracking function of the tracker unit is performed by an operator with a joystick-operated, servo-driver, optical system.

Prime power is provided by a two-wheeled, gasoline-powered generator. This item is attached to the fire unit for transport and is removed for remote emplacement.

In June 1971 the British Aircraft Corporation submitted an unsolicited proposal for a demonstration of Rapier to the Office of the Chief of Research and Development (OCRD), Department of the Army, resulting in the US Army Missile Command being tasked to conduct a technical evaluation of the proposal. On 3 December 1971 agreement was reached for a 6-week demonstration/test program that was subsequently forwarded to OCRD and accepted.

Objectives of the evaluation are to verify technical claims of the contractor, determine to what degree Rapier satisfies the low-altitude forward area air defense system (LOFAADS) requirements, and demonstrate the system to interested US observers.

The evaluation will be conducted at the contractor's facilities in the United Kingdom; Redstone Arsenal, Alabama; and Fort Bliss, Texas.

FIELD ARMY AIR DEFENSE SYSTEM (FAADS) PHASE I STUDY (From minutes of 13 Apr 72.)

A classified briefing (SECRET) on phase I of the FAADS study was presented. The FAADS study is an outgrowth of the Air Defense Evaluation Board's (ADEB) effort, and phase I was conducted to satisfy two primary objectives required by DA:

- To examine engineering concepts of various candidate weapon systems, both foreign and domestic, which have a potential to satisfy the short-range air defense (SHORAD) requirements during 1975-1995.

- To determine a set of SHORAD systems which should be subjected to further in-depth analysis in a follow-on phase.

Phase I was completed 21 January 1972 and was briefed to Mr. Johnson, Under Secretary of the Army for R&D, 18 February 1972. USACDCADA was then directed to proceed into the follow-on phase, phase II. Phase II objectives are to be finalized by August 1972.

Some Lines About A Line

Alex Dumbrigue
Litton Data Systems Division
Van Nuys, California 91409

The air traffic control line (ATCL) is defined as a line established forward of the forward edge of the battle area (FEBA) along prominent terrain features readily identifiable by observers from the air and ground.[1] The definition source further elaborates that " . . . normally it is located at or forward of the fire support coordination line (FSCL). This line enhances freedom of movement of all friendly aircraft operating in the vicinity of the FEBA and provides air defense with a demarcation line to facilitate identification of all detected aerial objects penetrating the forward combat zone."

Despite the seemingly clear-cut purpose and use of the ATCL, there are elements within the definition which require clarification because they conflict with other lines which are also located forward of the FEBA, or seem difficult to establish by the terms of definition. In this regard, the requirement that the ATCL be readily identifiable by observers from the ground is questioned. It will be noted that the ATCL is " . . . normally located at or forward of the FSCL"[2]; yet, in scrutinizing a similar clarification of the FSCL, it will be seen that ". . . whenever possible, the FSCL follows well-defined terrain features which are easily recognizable from the air (only)."[2]

Aside from posing the seemingly incompatible requirement that the ATCL, " . . . which is at or forward . . ." of the FSCL, be identifiable by a ground observer while the latter is not so constrained, there is a further ambiguity in purpose. The ATCL was originally conceived as an air defense identification line (ADIL) in early doctrinal development of Army airspace concepts.[3]

This was subsequently changed to incorporate the notion that such line could also be used advantageously to promote freedom of air traffic movement in the area at, or immediately forward of, the FEBA. Facilitation of identification, however, remained a primary purpose of the ATCL. This is discernible in some literature for joint identification procedures which focus on the ATCL in delineating such procedures.[4] US Air Force literature[5] also discusses two additional arbitrary lines which confuse rather than clarify the concept of an ATCL. These are:

> Minimum line of detection (MLD). This is an arbitrary line at which aircraft must be detected to provide sufficient time for identification, scramble, interception, and destruction to protect a vital area. The MLD normally coincides with the ATCL. To meet this criteria the MLD must be sufficiently forward of the FEBA to permit the action of identification, scramble, and intercept by ground-based fighters.

---

[1] Field Manual 1-60, Army Air Traffic Operations, DA, 12 November 1968.

[2] Report: Supplement 1, Part 4 to Initial System Description TOS. Fire Coordination Line Functional Area Design Concept (U) ADSAF, TOS Development Group, February 1967 (Unclassified).

[3] ST 1-60-1 Army Concepts of Airspace Utilization USACDC, December 1963.

[4] Report: Panel for Airspace Management (U), JCS SFP-ASM, December 1966.

[5] TAC Manual 2-6, Air Defense in Tactical Air Operations, HQ USAF TAC, January 1966.

Minimum Line of Interception (MLI). This is an arbitrary line at which the enemy forces should be intercepted by aircraft. It is used to provide the surface-to-air missiles and antiaircraft gun artillery adequate time to destroy, prior to bomb release, those enemy weapon systems not intercepted by aircraft. To meet this criteria, the MLI must consider air defense artillery reaction time.

Not only is there confusion in usage but the question of responsibility for designating these similar lines using common references or orientation can mean that where everyone is responsible, no one is responsible.

In connection with air defense studies on which the author has participated, serious attempts to plot an ATCL within the definition context presented earlier is difficult if not impossible. The following problems are encountered:

- With reference to usual Fulda Gap deployment in such studies, a readily identifiable terrain feature meeting the criteria for an ATCL is not usually found that stretches across the entire field army front.

- Such a terrain entity, when it exists, is more probably used for other lines requiring similar characteristics; e.g., FSCL. The requirement that the ATCL be readily identifiable for both air and ground observers virtually precludes such a terrain feature.

- Research of the subject results in identification of still other lines forward of the FEBA having similar requirements.

In Europe the FSCL (identified earlier) is recommended by the ground force commander in coordination with air component counterparts. This is based on division headquarters recommendations modified to produce a single continuous line across the corps front, which is a virtual impossibility. The FSCL may also be the air-ground demarcation line (AGDL) established at the 4th ATAF/CENTAG JCOC—still another line!

Responsibility for determination of the ATCL is vested in the air component commander, who, after coordination with other component commanders, agrees on the location of the ATCL. The ATCL is supposedly located at or forward of the FSCL.

The MLD is an arbitrary line established by the air component commander, and it normally coincides with the ATCL, while the MLI is a line short of the MLD and represents the line at which fighter interception should occur while providing surface-to-air missiles and automatic weapons sufficient time to react to those hostiles not destroyed by fighters. Confusion? Guaranteed!

It is readily apparent that there is fragmented responsibility and significant margin for error in the implementation and use of these several different lines having different stated purposes but common orientation. Since the ATCL is an operational element in the implementation of a myriad of identification procedures, especially in the hectic transition from peace to war, it seems that the following actions or provisions should receive attention.

- Reevaluate the ATCL concept with a view toward a modified definition.

- Determination of the ATCL be made by the joint commander based on recommendations of his component commanders.

- The definition contain no reference to ground observation.

- The definition not infer that this line is coincidental with other lines because the purposes of the various lines differ. If a single line can serve more than one user, then perhaps a single "force-generated" term can be applied.

- The factors influencing freedom of friendly air traffic forward of the FEBA to the ATCL be isolated and analyzed to improve identification procedures and to facilitate air defense battle zone separations when these are usable.

Manpower and Reserve Affairs

(Extracted from Command Comment No. 83)

The Honorable Hadlai A. Hull, Assistant Secretary of the Army (Manpower and Reserve Affairs), recently discussed some of the most significant problems currently facing the Army, namely race relations, drug abuse, and accessions. The highlight of his comments are presented below.

RACE RELATIONS

We are taking steps to insure that racial prejudice or its appearance is eliminated in every area, with particular attention to promotions, military justice, and access to housing and other public accommodations off-post. We have also made progress in other areas. Some of our more important accomplishments are:

•For the first time in the history of the United States, a military service, the Army, has three black general officers on active duty. A fourth serves in the Army Reserve and a fifth in the National Guard. An additional black colonel is a general officer designee, and on the date of his promotion the Army will have four black general officers in the Active Army, for a total of six black generals in the entire Army family. Four years ago we had none.

•On active duty now are 76 black colonels compared to 9 in 1965, an 800-percent increase.

•Presently, we have 13 black officers attending senior service schools, another significant increase when compared to only 2 in 1965. Other indexes of career mobility show the same upward trend.

•Fifty-three black cadets entered the United States Military Academy this year, compared to only 9 in 1968. In the ROTC area new units have been established at predominantly black schools, bringing the total number to 16. Additionally, a number of senior ROTC scholarships have been set aside for students from disadvantaged areas.

•A major effort is underway to increase the representation of blacks in the MOS's which provide challenge and a higher level of job satisfaction.

•Finally, we intend to take action to remove from the Service the handful of individuals of both races who foment lawlessness and violence, and to raise the quality of new accessions.

DRUG ABUSE

Our efforts to prevent and control drug abuse emphasize:

•Prevention through enlightened leadership, credible education, and aggressive law enforcement.

•Refining methods of identification.

- Improved techniques of detoxification and treatment.

- Decentralized rehabilitation with community involvement.

. . . Some preliminary reports of 15-25 percent of our troops in Vietnam being addicted to heroin turned out to be far too high. The facts, based on reliable tests, give us a different perspective. Since June 18 we have tested over 72,000 men about to return from Vietnam. About 4.8 percent exhibited evidence of heroin intake. By no means can all of those who tested positive be termed heroin addicts. Now that our identification program is well established in Vietnam, we are rapidly expanding our procedures to encompass other drugs so that we can deal effectively with drug abuse at home and in all oversea areas.

Extended treatment is required in some cases, and we have a clear obligation in this area. Identified users requiring special care are now air evacuated to the United States and placed in one of 34 hospitals or clinics organized for rehabilitation. Continued treatment is assured those who want help even though terms of service may expire. We are hopeful, but it is too early to predict complete success with those being treated.

MANPOWER

Currently our major manpower concerns center around action to:

- Reduce the size of the Army from about 1,120,000 men on 1 July 1971 to about 892,000 by the end of FY 72.

- Convert to an all-volunteer Active Army. There were 19-2/3 divisions in the structure in FY 69. We project that this will be reduced to 13-1/3 divisions by the end of FY 72. This rapid reduction in size creates unusual problems. For example, on the one hand we are required to involuntarily release personnel while concurrently continuing draft calls. The detailed explanation is complicated, but it involves the requirement to maintain a correct grade structure. There must be a proper balance between our ranks.

We must, therefore, continue to draft because there cannot be rifle squads made up entirely of sergeants. In addition we are raising our quality standards, which were somewhat relaxed during the Vietnam buildup, and are getting rid of the problem people.

The situation is further complicated because it is not like past force reductions. When a mobilized force contains a high proportion of Guard/Reserve units, as in the cases of World War II and Korea, we can simply send those units home. The existing force with no Reserve units must be dismantled man-by-man. This makes a balanced force harder to maintain, yet, we must maintain balance at every step of the reduction process.

We need privates and are not yet getting enough new volunteers. We are doing much better than before, however. By mid-1973 the Army expects to reach the President's zero draft objective.

Force reductions have also impacted on the Reserve components. We are improving the readiness and capability of the Army National Guard and Army Reserve. Secretary Laird's policy statement of August 1970 directs that the Reserve components will be the

initial and primary source of augmentation in any future emergency requiring rapid and substantial buildup of active forces. This is the total force concept and there is absolutely no doubt that the role of the Reserves will be substantially greater in the decade of the 70's . . . .

. . . there is another sign—or perhaps better stated, a trend—which makes the increased National Guard and Reserve role a matter of necessity. The rising cost of military manpower accounts for an ever increasing amount of the Defense dollar. To pay, clothe, and feed the Active Force military member costs an average of $8,000 a year—six times the cost of maintaining a Guardsman or a Reservist.

Improved Hawk

Mr. Clayton G. Morgan
Chief, Missile & System Integration Branch
Systems Engineering Division
Hawk Project Office, Redstone Arsenal

INTRODUCTION

Improved Hawk, now in production, will provide vital air defense to the field army against enemy air attacks. The system is just as it is named—an Improved Hawk system.

Basic Hawk is a mature air defense system with more than 10 years of field service by the United States Army, the United States Marine Corps, seven NATO countries, and seven additional nations. Numerous flight tests have been conducted, and the system has proven itself in actual combat.

Improved Hawk advantageously uses advanced technology to meet increased threats and has significantly improved system performance.

Like Hawk, Improved Hawk features particular effectiveness at low altitudes by using CW radar discrimination against ground clutter, guidance accuracy resulting from the use of semiactive homing guidance, and the mobility and versatility required for field army use.

The most significant differences in Improved Hawk are that an all-new missile has been developed (although the outward appearance is the same) and a new major item called the information coordination central (ICC) has been added to the ground support equipment. The missile features an all solid-state guidance section, a larger warhead, and an improved rocket motor. In addition, the improved missile introduces a new and significant advance in the area of missile field support, test, and repair. The missile is a certified round; that, is, it is certified to be reliable from the time of manufacture to launch. No field testing or repair is required. The ICC provides a digital computer which permits rapid target data processing and consequently greatly reduced system reaction time. Improved features are provided to the other major items by modifications to the existing basic Hawk items.

In addition to the basic employment concept of the battery, the Improved Hawk system can be reconfigured and an Improved Assault Fire Unit (IAFU) can be deployed for special operations such as helicopter or amphibious assaults or when movement by echelon is desired.

Improved Hawk is basically designed for defense of a mobile field army in combat. Consistent with this requirement all battery equipment can be carried or towed by M35 or M36 cargo trucks which are integral to the battery.

The equipment is designed for strategic airlift in Phase II cargo aircraft. Also, all standard battery equipment is capable of being helicopter carried for rapid relocation.

SYSTEM DESCRIPTION

The battery configuration of Improved Hawk provides complete system capability. The battery is shown in figure 1. However, platoon-sized IAFU can be detached for situations requiring greater mobility or involving greater combat exposure. This unit is shown in figure 2. Improved Hawk may be divided into four functional groups.

IMPROVED HAWK BATTERY

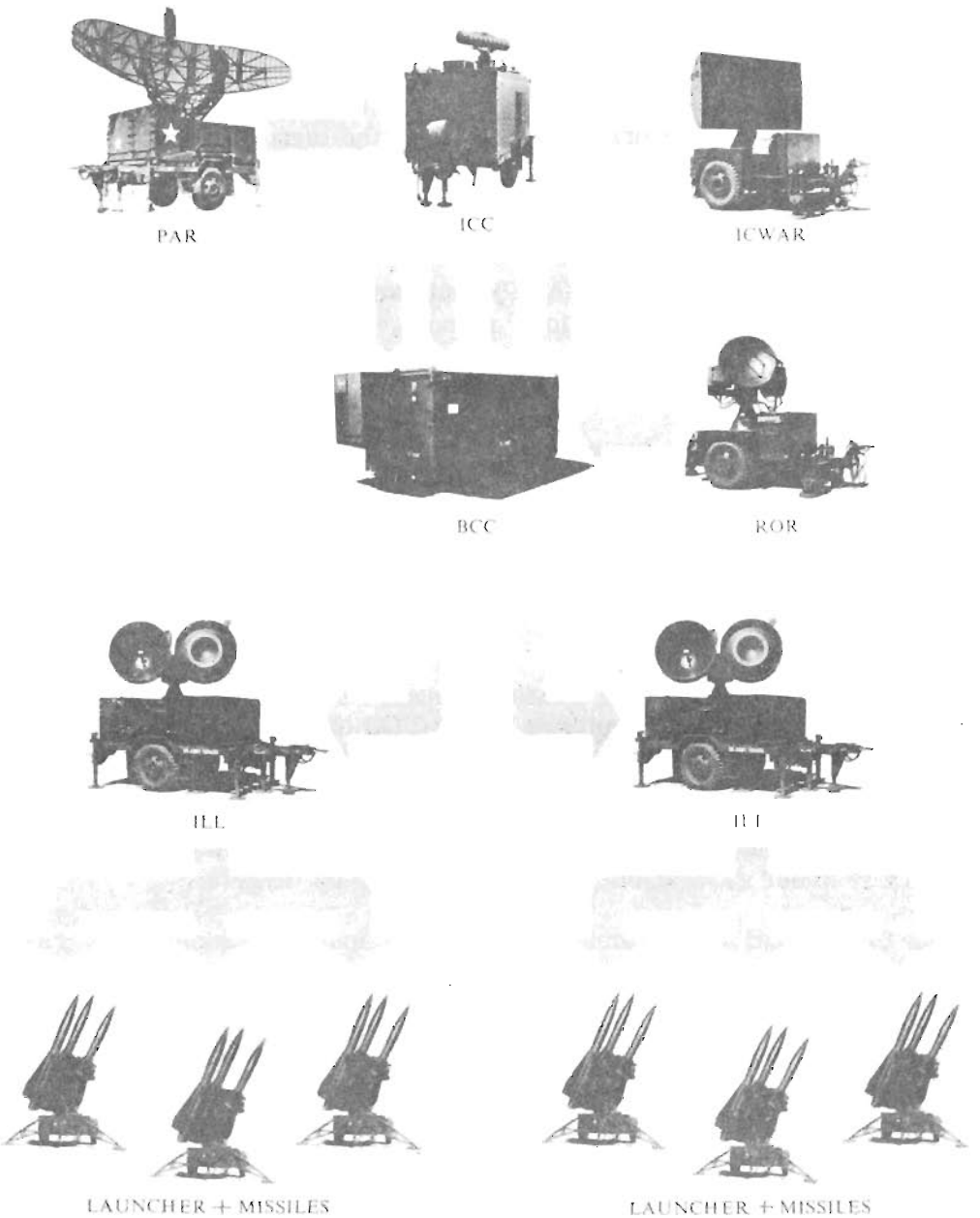

Figure 1

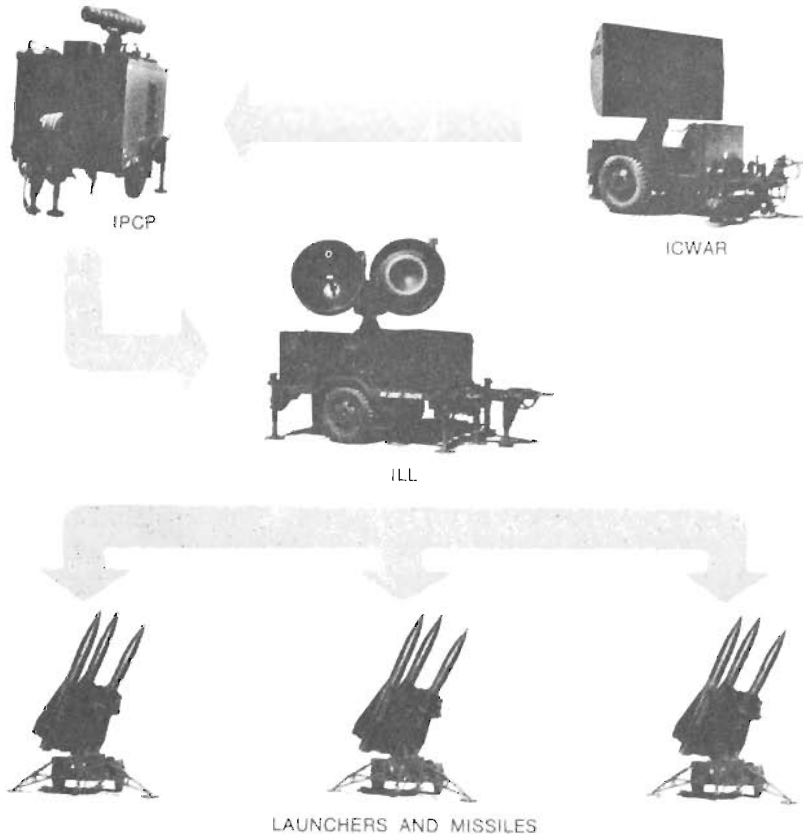

Figure 2

Acquisition and Fire Control Group. The acquisition data required for target detection, identification, and evaluation is provided by a volume coverage pulse acquisition radar and a horizon-searching improved continuous wave acquisition radar. The tactical control of the battery and the control of each firing section is performed from the battery control central.

An information coordination central (ICC) houses IFF, communications, and an automatic data processor (ADP). The ADP receives the acquisition data from the two radars and automatically assigns targets according to a preestablished priority basis. For critical targets, which must be engaged immediately to prevent penetration of the defended area, the automatic processing can be extended to include firing of the missile.

The range-only radar provides target range information in certain electronic countermeasures environments.

Guidance Group. The high-power CW illuminator radar acquires, tracks, and illuminates the assigned target and furnishes a reference signal to the semiactive homing missile. The missile homes to intercept on the energy reflected by the target. Both the illuminator and missile detect the doppler shift due to target motion and discriminate against clutter.

Launching and Handling Group. The designated launcher activates a missile, aims it into a collision course with the target, and launches it. The handling equipment includes a tracked loader for storage of additional ready missiles.

Test Equipment Group. A minimum of organizational maintenance equipment and field maintenance equipment is required because the ground equipment contains built-in test equipment and the Improved Hawk missile is a certified round which requires no field test or maintenance. The field maintenance equipment that is required is incorporated in a mobile configuration for maximum flexibility. Supporting equipment such as diesel generators, interconnecting cables, and prime movers are also provided as part of the tactical battery.

OPERATION

An automatic data processor (ADP) contained in both the ICC and IPCP provide for three modes of operation: manual, normal, and automatic. In addition, a casualty mode provision has been made to operate the system if the ADP is damaged or lost.

The manual mode is the same as in basic Hawk except that the tactical control officer (TCO) is assisted in target detection, IFF, and threat ordering by the ADP. In the BCC, the TCO monitors these data, manually selects for engagement, and assigns each selected target to a firing section. The fire control operator then controls the illuminator, launcher, and missile launch operations. The missile homes to intercept and a kill assessment is made.

In the normal mode all of the operator functions are performed automatically except that manual acceptance by the TCO of each target designation is required before the automatic sequence can continue.

The fully automatic mode, when selected by the TCO, negates this individual target acceptance requirement. This mode is especially useful when the battery is under saturation attack and for pop-up targets.

In both the normal and automatic modes, the operators monitor operations and the TCO can override automatic functions. In all operation modes, the target engagement sequence can be repeated as often as necessary. Depleted missile launchers are rapidly reloaded by the tracked loader.

AVAILABILITY

Improved Hawk system equipment has been designed with the highest possible degree of inherent availability. In addition, very significant improvements have been introduced into the system to assure that the operational availability, which considers the overall logistics system, is also maintained at a high level. Most of these improvements have been directed toward reductions in the necessity for complex, time-consuming maintenance actions.

The missile availability is paramount in this consideration. Here a highly reliable certified round requiring no test or repair in the field is supplied to the battery. A theatre readiness monitoring facility (TRMF) will ensure a high confidence in missiles, by random periodic sampling of the missile inventory.

Theatre readiness monitoring equipment is incorporated as an integral part of the certified round utilization. In the certified round concept of missile deployment, no testing is performed in the field. In order to provide a level of confidence that the missile inventory is at a high level of readiness, TRME is provided to test missiles through random sampling. The results of the sample tests in conjunction with the flight results from annual service practice firings will accurately assess the state of the inventory.

Since the certified round concept is based on the attainment of a high degree of inherent missile reliability, the need for battery level testing has been eliminated, and the TRME will insure a high confidence in battery missile loads by its random periodic sampling.

The TRME will perform an automatic, computer controlled test to insure minimum run time, maximum accuracy, and a thorough evaluation of the missile performance. The TRME has provisions for limited repair and any required missile modifications under controlled environmental conditions.

The overall requirement for maintenance of ground support equipment (GSE) has been reduced significantly through the use of built-in test equipment (BITE), which greatly simplifies the task of performing periodic preventive maintenance checks and the isolation of faults. The extensive use of solid-state circuitry has enabled BITE circuitry to be employed to the maximum advantage.

Definite improvements have also been made in the reliability and maintainability features of Improved Hawk, with attendant increases in the mean-time-between-failure (MTBF) and reductions in mean-time-to-repair (MTTR). Through wide application of modularized components and integrated circuitry, it is possible to adopt a throwaway maintenance concept for Improved Hawk, which in turn reduces the workload on the supporting maintenance and supply organizations.

For those GSE assemblies which are not throwaway, the maintenance posture has been improved by a reconfiguration of the field maintenance equipment (FME). The Improved Hawk direct support unit is equipped with three mobile team shops for highly flexible use at the tactical sites.

These improvements in the maintenance support structure have resulted in a net savings of battalion personnel requirements as well as improved availability.

IMPROVED HAWK PROJECT MANAGEMENT

The project manager for Improved Hawk is Colonel Harry A. Buzzett. Colonel Buzzett and his staff are located at the Army Missile Command, Redstone Arsenal, Alabama. The project manager is responsible for the development, production, and fielding of the improved system.

Development of Improved Hawk began in 1963, with the Raytheon Company serving as the prime contractor. The system is now in production. A comprehensive test program has been conducted on the system. This program included over 100 actual missile firings at targets presenting a variety of severe intercept conditions to the system. These conditions included maneuvering targets, targets flying in close formation, high-speed targets, targets

at very low altitude, and targets using both noise and deceptive jamming. Improved Hawk decisively demonstrated a significant kill capability against these severe target conditions.

In November 1971, the Improved Hawk system was recommended for type classification Standard A.

Editor's Note: Type classification Standard A was approved in January 1972.

CONCLUDING REMARKS

The introduction of Improved Hawk to the field will provide a significant advance in the Army's air defense capability. The basic Hawk system, which has served its country well, will be phased out as the improved system becomes available. There is, however, still much to be done by many elements of the Army before Improved Hawk becomes an operational reality. In recognition of this fact, the Hawk project manager and his staff extend a standing invitation to anyone or any group that may need information or assistance in meeting their particular mission responsibility for Improved Hawk.

—Reprinted from Missile and Munitions Materiel Digest, February 1972

Night Vision

Editor's Note:

Following are briefs of two reports published by the US Army Behavior and Systems Research Laboratory, Office of Research and Development, Arlington, Virginia.

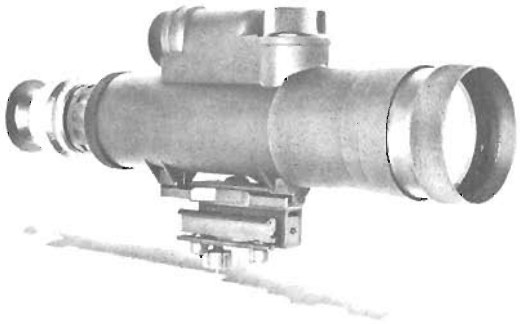

Figure 1. Starlight Scope.

Figure 2. Night observation device.

IMPROVED SEARCH TECHNIQUES WITH PASSIVE NIGHT VISION DEVICES

Requirement. To improve the effectiveness of soldiers using passive night vision devices through new search techniques and procedures.

Procedure. Fifty-four operators (players) using the starlight scope (SS) or the night observation device, medium range (NOD), were given specialized search training consisting of two parts: (1) general search methods, which included search pattern and adjustment of speed of search; and (2) specific search techniques. The specific search techniques involved continuous movement of the device, stopping only to examine some object of interest, and a discontinuous movement with the device moved in discrete steps and the image display examined before the device was moved again.

The performance of these players was compared to that of another group, who were treated similarly in all respects except they did not receive the training on search method and pattern. Both groups were tested on the same terrain, which was complex and heterogeneous, extending 1,500 meters. Targets of different type, contrast, and mode were placed in the area at various distances of 100 to 1,200 meters from the players. Testing was conducted under starlight and full-moon illumination conditions. Search areas (scan angles) of 75° and 35° were used.

Findings. Employment of the new search techniques and procedures resulted in a considerable increase in the number of targets detected; targets were detected in a shorter time.

Utilization of Findings. Special search training that will assure a more timely and comprehensive coverage of the area to be searched should be given to soldiers using night vision devices. This training should emphasize (1) use of a rectangular search pattern that will produce a systematic and comprehensive coverage of the search area on a regular basis, and (2) use of a variable scanning rate, with the rate of scan adjusted to the difficulty of the terrain being examined.

(The search training and familiarization with the devices can be accomplished in 2 to 3 hours.)

EFFECT OF SEARCH AREA SIZE ON TARGET ACQUISITION WITH PASSIVE NIGHT VISION DEVICES

Requirement. To determine the effect of search area size on performance with passive night vision devices, and the implications of findings for operational use, basis of issue, and search deployment, as well as for improvement of soldier effectiveness in using these devices.

Procedure. One hundred thirty-five operators (players) were tested at the rate of nine per night. They were required to search for targets over search areas defined by scan angles of 75°, 35°, and 25°. The area to be searched was complex and heterogeneous terrain which extended to 1,500 meters. Targets differing in type, contrast, and mode of presentation were placed in the area at distances of 100-1,200 meters from the players. Testing was conducted under starlight, half-moon, and full-moon illumination. The devices used were the starlight scope (SS), crew served weapon night vision sight (CSWS), and the night observation device, medium range (NOD). Detection responses and search behavior were recorded on magnetic tape.

Findings. Prior research had indicated that operators failed to detect many targets that were within the device capabilities. The results of the present experiment showed that reduction in search area size greatly improved operator efficiency, particularly under low light conditions.

Effect of search area size on target acquisition was found to be related to target mode (static vs dynamic) and to distance. Moving and stationary targets were detected equally often when the search area was large, but with reduced area size more moving targets than stationary targets were detected. Reduction in size of search area increased the detection of distant targets more than it did of close targets. The SS and CSWS previously found to be of limited value for detection of targets at mid (350-800 meters) and far (800-1,200 meters) distances improved considerably in this respect when the search area was narrowed.

Improvement resulting from increasing the number of devices used was greatest for wide search areas, particularly under low illumination. For all illumination conditions and search area sizes, increasing the number of operators with devices from one to two produced a sizable improvement. When the number of operators was increased from two to three, there was less improvement. When more than one operator was used, more targets were detected when overlapping search of the entire area was employed than when the area was divided into subsectors.

Utilization. Soldiers' effectiveness with these devices is highly related to search area size, as well as to device deployment, number of operators, and individual operator efficiency. The findings show how performance is affected by environmental factors and target characteristics, and suggest how target acquisition can be improved by reduction in search area size and by the use of multiple properly deployed devices. To maximize the probability of target detection, when tactically feasible the search area should not be divided into smaller subsectors.

Batteries

Across

1. A _____ cell cannot be recharged.

5. The lead-acid _____ is the most common form of storage battery.

6. With cells in series, the current capacity is the _____ as one cell.

7. The _____-acid cell is the most common form of storage battery.

9. The zinc-carbon dry cell is the _____ common type of primary cell.

11. The current capacity increases with _____ size cells.

13. The zinc container of a dry cell is commonly referred to as the _____.

15. The lead-acid battery has very low _____ resistance.

16. With cells in parallel, the total current capacity is the _____ of the individual values.

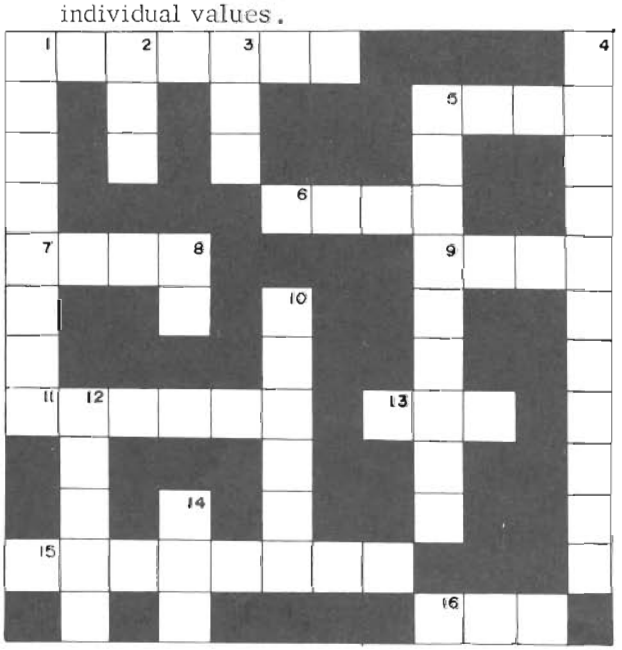

Down

1. With cells in _____, the voltage output is the same as one cell.

2. Current in a chemical cell is a movement of the positive and negative _____.

3. With cells in series, their voltages _____.

4. Sulfuric acid forms the _____ in a storage battery.

5. The voltage output depends only on the _____ in the cell.

8. To charge a storage battery, connect it to a _____ voltage equal to about 2.5 volts per cell.

10. The positive electrode of a dry cell is _____.

12. _____ reduces the effectiveness of the carbon-zinc cell chemicals.

14. _____ carbon-zinc cells in series have an output of 15 volts.

Answers on page 92.

Reader's Corner

CURRENT BOOKS AND ARTICLES OF MILITARY INTEREST

This list is published to draw attention to worthwhile and informative books and articles in other publications. We realize that not all items will be available to all readers. Our motive is to be helpful to as many readers as possible.

The content of these publications does not necessarily represent the opinion of the US Army Air Defense School.

—Editor

BOOKS

Nuclear Proliferation: Prospects for Control by Bennett Boskey. Dunellen Co., New York.
"A discussion of the possibilities and problems of the Treaty on the Non-Proliferation of Nuclear Weapons by a diverse group of highly qualified experts."

COBOL Programming by Nancy B. Stern. Wiley Co., New York.
"We have written this book with three primary objectives. We wish to provide the beginner in data processing with (1) the ability to write efficient COBOL programs, (2) an understanding of how COBOL is used effectively in commercial applications, and (3) the logical approach necessary to write sophisticated programs."

Deceitful Peace; a New Look at the Soviet Threat by Gerhart Niemeyer. Arlington House, New Rochelle, New York.
"Written by one of America's foremost authorities on Communism, this provocative book challenges the idea of 'peaceful coexistence' and the argument that the Cold War is all over but the stacking of arms."

Undeclared War and Civil Disobedience, the American System in Crisis by Lawrence R. Velvel. Dunellen Co., New York.
"Professor Velvel's book probes this crisis of legitimacy that has been provoked in the United States by the Vietnam War."

Automatic Data Processing: Systems/360 Edition by Frederick P. Brooks. Wiley Co., New York.
"The material is presented here in a form appropriate to a two-semester course for college seniors."

FORTRAN; Logic and Programming by Fritz A. McCameron. R. D. Irwin Co., Homewood, Ill.
"Presents the characteristics to the language and the commands from input, output, and arithmetic statements to control and DO statements."

The Making of Israel's Army by Yigal Allon. Universe Books, New York.
"In The Making of Israel's Army he traces each stage in the story, analyzing the thinking behind the army's make-up and methods of training - before and after statehood - the principles of its leadership, and (not uncritically) the causes, strategies, and aftermaths of the three wars and major campaigns."

The Montagnards of South Vietnam by Robert L. Mole. Tuttle Co., Rutland, Vt.
"Missionaries, soldiers, and staff members of the Summer Institute of Linguistics in Saigon provided many of the facts for this study. Historians, ethnologists, and all people seriously interested in Vietnam's people will find this volume to be informative reading."

Military Men by Ward S. Just. Knopf, New York.
"Ward Just's compelling portrait of today's Army combines a keen analytic sense with the understanding of a journalist who has reported wars in Cyprus and Vietnam."

Studies Prepared for the President's Commission on All-Volunteer Armed Forces by President's Commission on an All-Volunteer Armed Force. US Government Printing Office.
"These volumes are organized in four sections. The first volume concerns (1) military personnel requirements and (2) the supply of personnel to the military. The second volume contains studies on (3) social and political questions that arise in connection with a volunteer military, and (4) a series of papers on special topics which relate to the all-volunteer armed force."

Charge! or, How to Play War Games by Peter Young. A. S. Barnes Co., South Brunswick, N.J.
"Among its devotees, the war game has all the excitement and compulsive pleasure of roulette, treasure hunting, and bridge, with a bonus of color and technique often missing in more mundane hobbies."

ARTICLES

"The Pressure of Laser Light," Arthur Ashkin, Scientific American (February 1972), pp 63-71.
"The forces exerted by a focused beam of laser light are strong enough to push tiny particles around freely in various mediums. Several applications based on this recent finding are proposed."

"Genesis to Revelation," S. L. A. Marshall, Military Review (February 1972), pp 17-24.
This is a short autobiography of this great author and of his writing career, which had its beginnings at El Paso and Fort Bliss.

"The Many Faces of the Drug Problem," Leavitt A. Knight, The American Legion Magazine (February 1972), pp 8-12.
"A look at the multiple causes - and fronts to be attacked - in facing up to the national emergency brought on by drug abuse in the US."

"On Basis of Pacification, Vietnam War Has Been Won," Robert D. Heinl, Armed Forces Journal (February 1972), pp 50-51.
"Colonel Heinl recently returned from a worldwide news swing that included his fourth in-depth visit to Indochina since 1965. In this article, he gives a comprehensive overview of the background and achievements of Washington's Vietnamization program."

"Lessons in Preparedness," H. G. Rickover, Ordnance (January-February 1972), pp 288-291.
"Although the Soviets are continuing a tremendous build-up in naval forces and missile power, Americans seem unable to learn from the past that there can be no peace in our time without a strong defense."

"Is Pentagon Reserve Planning Realistic?" Lynn D. Smith, Army (February 1972), pp 12-17.
"With the smallest active Army since pre-Korea days in prospect, the Pentagon proposes to fill the gap with reserve units. But lack of training time, maneuver areas and equipment - the traditional barriers to reserve readiness - are still with us."

"House Group Hits Lack of Air Defense," Donald C. Winston, Aviation Week (January 17, 1972), pp 15-16.
"Economy moves initiated by former Defense Secretary Robert S. McNamara and continued under the Nixon Administration have largely dismantled the US air defense system and left the southern portion of the country open to incursion by any hostile aircraft."

"A Case for Rubber Bullets," M.C. Brown, Army Journal (November 1971), pp 18-21.
"With rubber bullets training would be as much play as a sparring session between two boxers. It should not be beyond our technical ingenuity to produce rubber bullets for training and the value in training would far outweigh any additional expense. Eyes could be protected by the compulsory wearing of goggles."

"The Chinese Mind: A Probing and Exploration," Clyde B. Sargent, Naval War College Review (January 1972), pp 41-49.
"The Chinese mind will determine Chinese behavior; our awareness of the forces behind behavior will permit us to influence that behavior, possibly in the interests of everyone. Hopefully the Chinese may similarly seek to understand the American mind."

"Countermeasures Against the Urban Guerrilla," C.N. Barclay, Military Review (January 1972), pp 83-90.
"My purpose in this article is to indicate by example some of the countermeasures which are being adopted by security forces—police and military—to stop antisocial activity and threat to law and order."

"Evaluation Systems and Superior-Subordinate Relationships," Anthony J. Daniels, Military Review (January 1972), pp 3-8.
"The present evaluation system is designed to measure how well individuals stack up to

superiors. To complete the picture requires that the system also consider how well leaders stack up to their subordinates."

"Why the Space Shuttle Makes Sense," Lawrence Lessing, Fortune (January 1972) pp 92-97. "It's time to develop a space program that's economically sustainable. With reusable vehicles, launch costs could be drastically cut and the US could afford to preserve its hard-won lead in exploring the cosmos."

ANSWERS TO CROSSWORD PUZZLE

Across	Down
1. primary	1. parallel
5. cell	2. ion
6. same	3. add
7. lead	4. electrolyte
9. most	5. chemicals
11. larger	8. dc
13. can	10. carbon
15. internal	12. Aging
16. sum	14. Ten

Readers are invited to submit for publication articles and informative notes that are of professional interest to the air defense artilleryman. Articles should be current and forthrightly stated and should relate to some aspect of what air defense units in the field are doing to accomplish their mission, particularly in the technical and tactical areas. Miscellaneous articles expressing either technical or nontechnical ideas that may be of value to air defense will also be considered for publication.

Direct communication to the editor is authorized:

Office of Doctrine Development, Literature, and Plans
US Army Air Defense School
P.O. Box 5600
Fort Bliss, Texas 79916
Telephone 915-568-2493
AUTOVON 978-2493

DEPARTMENT OF THE ARMY
COMMANDANT
US ARMY AIR DEFENSE SCHOOL
ATTN: ATSAD-DL-D
P.O. BOX 5600
FORT BLISS, TEXAS 79916

OFFICIAL BUSINESS
PENALTY FOR PRIVATE USE, $300

POSTAGE AND FEES PAID
DEPARTMENT OF THE ARMY
DOD 314

U.S. MAIL

Commandant
US Army Air Defense School
ATTN: ATSAD-DL-D
P.O. Box 5600
Fort Bliss, Texas 79916

CUT OUT, FOLD ON DOTTED LINE, SEAL ON THREE EDGES WITH TAPE, AND MAIL.
NO POSTAGE IS NECESSARY.

REQUEST FOR, OR CHANGE OF, DISTRIBUTION

☐ Start ☐ Increase ☐ Decrease

___ No. of copies From ___ To ___ From ___ To ___

Distribution of Air Defense Trends to

_____
(Name, address, (and ZIP or APO) of unit or office)

_____

Note.

CHANGE MAILING ADDRESS

OF: _____
(Old name and address of unit or office)

_____

TO: _____
(New name and address of unit or office)

_____

Aircraft Recognition

This is the fourth increment of multi-image cards and flash cards for your aircraft recognition supply. You should now have 12 multi-image cards and 120 flash cards involving 9 aircraft.

In the May 1971 issue of Air Defense Trends we introduced a new method of training in aircraft recognition. The method was devised by Human Resources Research Organization, Division No. 5, at Fort Bliss, Texas. Students using this method attained an average score of 95 percent as compared to 87 percent for those using other methods. We repeat the instructions here for the benefit of those who may not have seen them previously.

INSTRUCTIONS

First, cut out the multi-image cards and flash cards.

Stage 1: Study each multi-image card carefully, one at a time. Read each recognition feature and look at it in the pictures of the aircraft. When you feel familiar with one aircraft, go to the next card. When you feel familiar with all of the aircraft, go to stage 2.

Stage 2: Spread the multi-image cards so that descriptions of recognition features are covered and you can compare all of the aircraft with one another from each viewpoint. See if you can name each image (cover the names where they show). Practice with one view at a time, working in a row across the cards, naming each aircraft. When you come to a view you do not know, uncover the name at the top of the card so that the next time through you will be able to correctly name the image. If you are having trouble naming the aircraft, go back to stage 1 and review each card again with the name uncovered, then return to stage 2.

Stage 3: Practice with flash cards. Hold the deck of flash cards so the aircraft names are away from you. Go through the deck one card at a time and identify each aircraft, checking your answers on the back. If you did not get the right name, put that card in the back so that it will come up again. But if you did get it right, drop that card out of the deck by placing it aside. Continue going through the deck until all cards have been dropped out, meaning you have correctly named them all. When you get all of the cards correct, shuffle the deck and work through it again, using the same procedure.

As space permits, additional cards will be printed in future issues until currently employed military aircraft likely to be seen by the ground observer have been accounted for.