Antiaircraft JOURNAL

SEPTEMBER-OCTOBER, 1950

LET US DO YOUR ENGRAVING

The Journal is equipped to handle all your engraving requirements.

All orders receive our immediate attention and will be mailed out about two weeks after receipt of your order.

Please make your selection from styles shown.

Lieutenant and Mrs. Luke Allen Murdock
HAND SHADED ANTIQUE

Mrs. Laurence Bennett Garland
SHADED MODIFIED ROMAN

Mrs. John Clinton Reese
LINED MODIFIED

Mr. and Mrs. Michael Peter Davis
ARTISAN

Mr. and Mrs. Robert Lewis Carroll
BLACK ANTIQUE ROMAN

MR. CHARLES MATTHEW HOWARD
MEDIUM GOTHIC

MR. MICHAEL RICHARD ENDICOTT
LIGHT ROMAN

Mary Ruth Murdock
ELONG ROMAN

Mr and Mrs John Howard Trumbull
ITALIC SCRIPT

Mr. and Mrs. Carl Gordon Sills
COLONIAL SCRIPT

Mr and Mrs. Richard George Harding
CAROL TEXT

Mrs. Carlton John Farrell
BELVEDERE

Mrs. James Nelson Carroll
ST. JAMES SCRIPT

Mr. and Mrs. Harold Russell
ENGLISH SCRIPT

Mrs. Helen Smith Kimball
ST. MORITZ

Mrs. Eric Gunnar Oldfield
SPENCERIAN SCRIPT

VISITING CARDS

Military Cards (3 lines)

100 cards with new plate	$6.75
100 cards with your plate	2.70
100 additional cards (either plate)	1.80

Personal or Joint (1 line)

100 cards with new plate	$4.05
100 cards with your plate	2.70
100 additional cards (either plate)	1.80

Informals (1 line)

100 cards with new plate	$5.35
100 cards with your plate	4.45
100 additional cards (either plate)	3.15

Birth Announcements

(1 card type)

50 cards with new plate	$7.65
100 cards with new plate	9.00
50 additional sets	3.15

(2 card type—ribbon tied)

50 cards with new plate	$10.80
100 cards with new plate	13.50
50 additional sets	4.50

Wedding Announcements or Invitations

50 sets (7 lines only)	$21.60	100 sets (7 lines only)	$23.40
50 sets (9 lines only)	23.40	100 sets (9 lines only)	25.20

additional sets of 50 ..... $3.60

Reception or At Home Cards

50 sets (4 lines only)	$8.10	100 sets (4 lines only)	$9.00

additional sets of 50 ..... $1.80

All prices include envelopes when appropriate.
Quotations will be forwarded on request for any social engraving not listed here.

ORDER FROM

Antiaircraft Journal

631 Pennsylvania Avenue, N.W. **WASHINGTON 4, D. C.**

THE UNITED STATES
COAST ARTILLERY
ASSOCIATION

OFFICERS

LT. GEN. LeROY LUTES
PRESIDENT

MAJ. GEN. LYMAN L. LEMNITZER
VICE-PRESIDENT

COL. CHARLES S. HARRIS
SECRETARY-TREASURER

ADDITIONAL MEMBERS OF THE
EXECUTIVE COUNCIL

BRIGADIER GENERAL S. R. MICKELSEN
BRIGADIER GENERAL JOHN C. HENAGAN
COLONEL CHARLES M. BOYER
COLONEL JOHN H. MADISON
LIEUTENANT COLONEL PAT M. STEVENS, III
MAJOR BERGEN B. HOVELL
MAJOR EDWARD T. PEEPLES

The purpose of the Association shall be to promote the efficiency of the Coast Artillery Corps by maintaining its standards and traditions, by disseminating professional knowledge, by inspiring greater effort toward the improvement of matériel and methods of training and by fostering mutual understanding, respect and cooperation among all arms, branches and components of the Regular Army, National Guard, Organized Reserves, and Reserve Officers' Training Corps.

The JOURNAL prints articles on subjects of professional and general interest to personnel of all the components of the Coast Artillery Corps in order to stimulate thought and provoke discussion. However, opinions expressed and conclusions drawn in articles are in no sense official. They do not reflect the opinions or conclusions of any official or branch of the Department of the Army.

The JOURNAL does not carry paid advertising. The JOURNAL pays for original articles upon publication. Manuscript should be addressed to the Editor. The JOURNAL is not responsible for manuscripts unaccompanied by return postage.

PUBLICATION DATE: October 1, 1950

Antiaircraft JOURNAL

Founded in 1892
Published from 1892 until 1922 as
THE JOURNAL OF THE UNITED STATES ARTILLERY
Published from 1922 until 1948 as the
COAST ARTILLERY JOURNAL

VOL. LXXXXIII SEPTEMBER-OCTOBER, 1950 No. 5

CONTENTS

Page
COVER: *AAA Defense at Suwon In First U.S. Korean Ground Action.*
ANTIAIRCRAFT AT SUWON. *By Captain P. LeR. Loomis, Artillery* 2
GENERAL MARQUAT 5
A PLAN FOR RADAR MAINTENANCE.
By Captain Jack E. Vaughn, Artillery, USNG 6
THE ONE-TWENTY MILLIMETER GUN.
By First Lieutenant Elmo E. Cunningham, Artillery 7
GENERAL JOHN L. HOMER, FORT BLISS COMMANDER, RETIRES 11
ANNUAL COAST ARTILLERY PARTY 13
HONOR ROLL 14
GUERRILLA (Part I). *By Colonel Samuel B. Griffith, II, U.S.M.C.* 15
WHY ARE WE FIGHTING IN KOREA? *By Warren P. Austin* 18
MEMBERSHIP LISTING 19
WE'RE GETTIN' TOUGHER. *By Major Forest Kleinman* 44
227TH AAA GROUP 46
228TH AAA GROUP. *By Colonel D. W. Bethea, Jr., S.C. N.G.* 46
YOUR JOURNAL 47
DELAWARE GUARD. *By Lieutenant Jack D. Hunter, Del. N.G.* 48
EXERCISE METRO 49
ROTC SUMMER CAMP. *By Colonel M. A. Hatch, Artillery* 50
ARTILLERY SCHOOL CHANGES 51
TYPICAL FAULTS AND FAILURES AAA AUTOMATIC WEAPONS. *By Captain Henry A. Oehrig, Artillery* 52
TEXAS ARTILLERY FOILED A YANK INVASION.
By Major John B. B. Trussell, Jr., Artillery 54
WRITE IT UP! 55
THE INFANTRY DIVISION.
By Lieutenant Colonel Dorsey E. McCrory, Infantry 56
NEWS AND COMMENT 60
ELECTION BALLOT 60
ARTILLERY ORDERS 63

COLONEL CHARLES S. HARRIS, Editor
LIEUTENANT COLONEL RICHARD W. OWEN, Associate Editor
M Sgt Fred P. Presnell, Business Manager
Sgt Ralph N. Charleston, Cir. Mgr.
Sgt 1cl Fred A. Baker, Bookkeeper

Published bimonthly by the United States Coast Artillery Association. Editorial and executive offices, 631 Pennsylvania Avenue, N.W., Washington 4, D. C. Terms: $3.00 per year. Foreign subscriptions, $4.00 per year. Single copies, 75c. Entered as second-class matter at Washington, D. C.; additional entry at Richmond, Va., under the Act of March 3, 1879. Copyright, 1950, by the United States Coast Artillery Association.

ANTIAIRCRAF

FIRST ARMY ACTION IN KOREA

Following the events started on Sunday, 25 June, when the North Koreans crossed the 38th Degree Parallel, Lieutenant Colonel William S. Fultz, commanding an AAA AW Battalion in southern Japan, received an order from the Commanding General, Fifth Air Force. Acting on that order Colonel Fultz organized an antiaircraft detachment for "an air transported mission." The exact destination and further details were guarded in close secrecy. Even so, most of the officers and enlisted men in the battalion managed to volunteer for an assignment in the detachment.

As events developed this detachment spearheaded the Army combat units committed to action in Korea.

Flight to Suwon

In the meantime it was learned that the detachment would man four M55s, quadruple caliber .50 machine guns. Three officers and 32 enlisted men were selected for the assignment. Care was exercised to insure that all chosen for the mission had at least six months yet to serve in the Far East Command, but it was later found that two men who had been selected would have to be re-enlisted before they could make the trip . . . So, Sergeant William S. Hasse, Grand Junction, Colorado, and Private First Class Clarence I. Myers, Commodore, Pennsylvania, stood in full field pack, beside the plane which was to carry them to Korea, raised their right hands and were sworn in by Captain Harry F. Mooney, Battalion Adjutant, to extend their enlistments for eligibility on the mission.

Finally on 29 June, details completed, men, ammunition and equipment aboard, Colonel Fultz gave last minute instructions to the detachment commander, Captain Frank J. McCabe, Flushing, New York, and his assistant, 2nd Lieutenant Joseph V. Bailey, Salt Lake City, Utah, and the planes roared down the runway—destination Korea. In a briefing just prior to departure—Major Stanley J. Paciorek, Battalion Executive Officer, had told them that they were

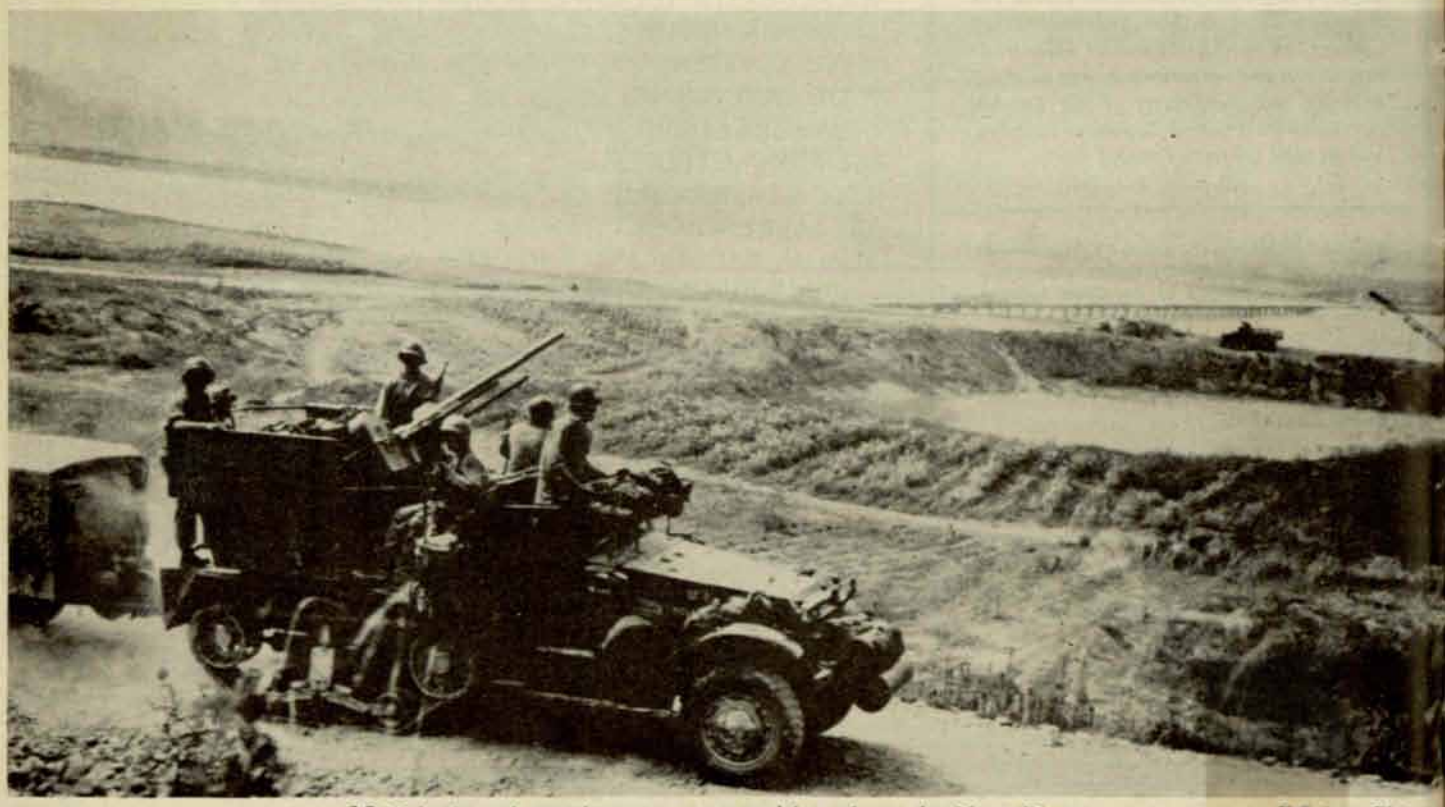

M-15 half-track moving to a new position along the Kum River. U.S. Army Photos

VOL LXXXIII Sept-Oct '50

T AT SUWON

By Captain P. LeR. Loomis, Arty.

to establish air defense of a field in Korea—but particulars were to be given them hours later once the situation was sized up on the spot.

On the way over, most of the men slept or dozed as the ships droned steadily over the Japan Sea, across the coast of Korea and inland over the mountainous terrain toward their destination, the Korean airstrip. Shortly after 0900 hours the planes came in for a touch-down at the field. The men swung into action—so rapidly that many did not have time to remove their "Mae West" life jackets. The M55s were unloaded from each plane as it rolled to a stop on the field and hurriedly established within ten minutes in primary positions, with the aid of the eager assistance of South Korean soldiers. Improvement of positions was being carried out along with other field requirements, assistance still being provided by Korean soldiers; the language barrier being the only problem of fullest cooperation between the Koreans and detachment members.

Enemy Attacks

With the immediate chores of field occupation completed, men of the detachment took time off to survey their new surroundings which for the most part can be described as terrain of hilly to mountainous nature with rice paddied valleys and corridors leading through the ring of hills surrounding the airstrip, with the city lying to the northwest. It looked for the present that no apparent action was pending—but by 1615 hours (29 June) as the sun was dropping behind the hills—the situation in this respect changed. In the distance there appeared what most of the men at the gun positions thought were F-51 "Mustangs"—four of them —but they soon proved themselves otherwise! "Looking toward the town about four miles away we heard an explosion," recounted Sergeant Melvin E. Tyra, Pleasanton, California, "and seconds later we caught it." Captain McCabe, detachment commander, said, "The four planes approached the strip from the northwest at about fourteen hundred feet. They formed with a pair in front followed by the other two in single file and power-glided on our position area, in an apparent attempt to destroy planes parked near the runway. They made four passes, dropping three medium-light bombs, and strafed the field at each pass. One plane crashed beyond the field and the second, obviously crippled, was losing altitude as he left the area. I labeled it a probable, and its destruction was confirmed a short time later by South Korean rural police who reported finding the wreck close to the place where it was last seen."

One plane dove on Sergeant Sidney T. Holman's section and attacked it by dropping bombs in trail. Observers said that a row of cannon shells tore up the earth on both sides of the gun section. Sergeant Hasse got a neat crease in his helmet and Private Harland S. Scoville, Mindoro, Wisconsin, immediately after pulling the operating handle saw it shot away. PFC Thomas Merante, Hudson, New York, received a broken leg from a piece of concrete thrown from the runway by a bomb explosion. Positions had to be selected close to the runway because of rice paddies surrounding the field. The plane was later destroyed and the pilot, a major of the North Korean Air Force, was captured by the police. At no time during the action did any men of the detachment leave the guns.

Crews continued to improve gun positions and all was quiet until 2000 when a "dusk patrol" of three NK fighters came over on two strafing passes. The guns went into action again, but no kills were made. The fighters, now more wary of the ack-ack, fired only short bursts and were driven off after two passes. It was growing dark now and guards were established about the field, supplemented by Korean soldiers. The night passed uneventfully, with the gunners getting a much needed rest, between guard tours.

Early on the morning of the 30th of June another C-47 arrived carrying six communications men headed by Warrant Officer Junior Grade Darrell M. Clagett, Omaha, Nebraska, who immediately began to establish and improve communications under Captain McCabe's direction. Phones were installed to the guns where runners had previously been employed.

That morning a C-54 with much needed supplies and ammunition developed engine trouble just short of the strip, came over, circled and decided not to land, so it returned to its base in Japan. The problem of ammunition and food supply then fell on Captain McCabe's shoulders as he scrounged the area. He secured ammunition from South Koreans and food from other nearby units.

Shortly after 1300 on the 30th, five airplanes appeared.

Captain Phillip LeR. Loomis, a former journalist, served in the ETO during World War II. Much of his service has been in Public Information assignments in which capacity he now serves in the Far East.

Defending an airfield in Korea.

Three were obviously F-80s and two several hundred feet below looked like F-51s. Warrant Officer Clagett asked Captain McCabe, "What are they?" Captain McCabe said, "I'm not sure yet." Clagett continued, "Well, I guess we'll know if they peel off and start shooting." As he voiced the final word, the two lower planes did just that! The guns immediately took them under fire, but no kills were made, as they splattered the area with small 23mm cannon shells which burst upon impact, spraying pellets. One of these inflicted a slight wound on PFC Lawrence E. Rogers, Searcy, Arkansas. The F-80s gave chase and shot down the two strafers. Most members of the detachment expressed difficulty in distinguishing between North Korean fighters and F-51 "Mustangs," and were obliged to depend largely on the hostility of action of airplanes of this type before taking them under fire.

Evacuation Order

The afternoon of the 30th following the attack was quiet, with no "dusk attack" as of the day before. By 2115 word was received from Advanced Command, GHQ, FEC, then under command of Brigadier General John Church, to prepare to evacuate the airstrip. It was also learned that the South Korean line had been penetrated by North Korean Ground Forces.

Orders were relayed to gun sections to prepare for the movement and three trucks were obtained from South Korean Army personnel at the field to evacuate the detachment to a new location. Guns were rendered inoperational, as ordered, and the convoy moved out quietly without lights, en route to the south. The convoy had moved some fifteen miles down the highway picking up Korean civilian vehicles, all obviously going the same direction. A halt was called and Captain McCabe was given orders to provide a rear guard action which called for a 45-minute wait. The purpose of this action, McCabe learned later, was to provide protection for the ADCOM, GHQ. On the move again difficulty with the Korean trucks made it necessary to abandon the three originally procured—the last about 25 miles from our destination. By a system of walking and shuttling, the detachment finally reached its southern destination.

Unloading in a hurry.

During the stay at the new headquarters location, which lasted until the night of July 2d, members of the detachment worked with other personnel around the area. It was 2000 hours that night when word was received that the detachment which had participated in the first organized ground combat action in Korea was to be airlifted back to Japan for re-equipping and return to action. When they returned to their home station, Colonel Fultz and the rest of the battalion welcomed them with a steak dinner with all the trimmings at the service club.

Purple Heart Medals were awarded to Captain McCabe; Lieutenant Bailey; Corporal Burley T. Blankenship, Richlands, Virginia; Private First Class Thomas Merante; Private First Class Frank A. Pierce, Marinier Harbor, New York; and Private First Class Lawrence E. Rogers.

At this writing most of the original detachment are back in Korea. Like other antiaircraft, they have no Korean planes to engage, but they are busily engaged in ground support roles with the divisions.

Members of the AAA detachment in the Army's first action in Korea.

2d Lt. Joseph V. Bailey, Salt Lake City, Utah.
WOJG Darrell M. Clagett, Omaha, Nebraska.
Capt. Frank J. McCabe, Flushing, New York.
Pvt. Roberto Alaniz, Los Angeles, California.
Pfc. Albert C. Allen, Jonesville, Virginia.
Cpl. James N. Bishop, Cumberland, Maryland.
Cpl. Burley T. Blankenship, Richlands, Virginia.
Pfc. Henry P. Bond, Brooklyn, New York.
Pfc. James F. Bowman, Knobnoster, Missouri.
Pfc. Herbert L. Bumgarner, Hudson, North Carolina.
Cpl. Fred W. Cobb, Leesville, La.
Pvt. Robert L. Davis, Rockville, Maryland.
Cpl. Richard J. Drapeau, Meriden, Connecticut.
Pvt. Harold E. Forsyth, Marysville, Iowa.
Pfc. Donald E. Gentzler, Honolulu, T.H.
Pfc. Solomon H. Hall, Glamorgan, Virginia.
Sgt. William S. Hasse, Grand Junction, Colorado.
Sgt. Sidney T. Holman, Negaunee, Michigan.
Pfc. Robert M. Lutz, Stewartstown, Pennsylvania.
Pfc. Johnie McGee, Wyterville, Virginia.
Pfc. Thomas Merante, Hudson, New York.
Pfc. Clarence I. Myers, Commodore, Pennsylvania.
Pfc. Frank A. Pierce, Marinier Harbor, New York.

Cpl. Ray E. Everts, Yakima, Washington.
Pfc. Roger E. Johnson, Jamestown, New York.
Sgt. Walter R. Reavis, Lufkin, Texas.
Cpl. Leslie G. Todd, Minooka, Illinois.
Sgt. Charles L. Worrol, Milford, Connecticut.
Pfc. Bolivar Riviera, Boston, Massachusetts.
Pfc. Lawrence E. Rogers, Searcy, Arkansas.
Pvt. Harland S. Scoville, Mindoro, Wisconsin.
Pvt. Kenneth W. Shields, Dallas, Texas.
Pvt. Charles Vaughn, Clearwater, Florida.
Sgt. Melvin E. Tyra, Pleasanton, California.
Pfc. Richard J. Vertz, Sturgeon Bay, Wisconsin.

AAA Unit Effective As Infantry Support

By Corporal Robert H. Sykes

With the absence of an enemy air force, the 1st Cavalry Division's Antiaircraft Artillery unit has another mission in the Korean conflict.

Lt. Elliott B. Hill of Texarkana, Texas, platoon leader who first committed his heavily armed half-tracks in the battle of Yongdong stated: "We were assigned to protect the flanks of the Field Artillery at Yongdong, but we also had to support the Infantry on several occasions in the same area. In our first encounter with the enemy, bands of guerrillas swept in on our flanks and we had to shoot our way out of it. To do this, our gunners used their antiaircraft guns as ground weapons."

When they were required to break up a roadblock to withdraw, PFC Howard L. Swailes, Rome, Iowa, had to crawl through intense mortar fire from one track to another to give the location of the enemy and directed the fire that destroyed them. Swailes is a radio operator and driver of a half-track, which he has affectionately dubbed "Guardian Angel."

PFC Alfred Dillingham of Marion, North Carolina, told of having used the half-tracks to tow heavy artillery pieces to their new positions when trucks weren't available. "One time," he revealed, "one of the artillery outfits was set up in a dry river bed and was swamped by a flash flood. Most of the howitzers and heavy equipment would probably have been seized by the enemy if it hadn't been for the half-tracks which pulled them to safety."

In addition to being an all-round heavy-duty vehicle, every half-track is a formidable fortress of defense and fire power. Cannoneer PFC Donald Harrison, Cincinnati, Ohio, explained that the four caliber .50 machine guns mounted behind an armor shield on the track are capable of downing a plane in flight and added, "They're just as effective against ground troops, we've found, especially the mass attacks used by the Reds."

Sgt. Keith McFarland, Fairfield, Iowa, said the half-track crews have been used mainly as a perimeter defense and security guard for artillery battalions.

"We haven't had any enemy planes to shoot at yet," Sgt. McFarland said, "but if they do show up, we'll be ready for them. And meanwhile, we'll fight as infantry and support the artillery."—Reprinted with permission from *The Army Times*, 26 Aug. 1950.

General Marquat Among Key Staff Officers With General MacArthur Since Corregidor

In a feature article by Ray Falk, the North American Newspaper Alliance released information on "Men Around MacArthur" recently.

Three members of the Far East Commander's top staff have served with him continuously since 1941. They escaped by PT boat from Corregidor with him and fought their way up to Japan from Australia under him.

Prominent among the top advisors on FECOM staff is Corregidor veteran Maj. Gen. William F. Marquat, who throughout the last war was MacArthur's antiaircraft officer, a title he still retains. He has been decorated for the performance of his ack-ack guns during the early days of the Pacific war. With the loss of our air power, Marquat's AA fire was our only defense against hundreds of Japanese planes.

General Marquat heads MacArthur's economic and scientific section. Although he would rather fight in Korea than hold down a desk job, on Marquat's shoulders now falls the greatest share of the occupation duties, since rehabilitation of the Japanese economy is today's prime aim of the occupation.

Born 56 years ago in St. Louis, Marquat once was automobile editor of the *Seattle Times*. He still carries a Seattle press card. A great baseball fan, he has contributed much to the development of this game among the Japanese.

A PLAN FOR RADAR MAINTENANCE

By Captain Jack E. Vaughn, Arty. USNG

The Radars SCR 584 are the eyes and ears of the antiaircraft artillery gun battalion. They require constant care and talented attention.

Radar maintenance is essentially a battalion problem. The whole plan of coordination and training should be approached from that level. Battalion is best equipped to make fast radar repairs, particularly under combat conditions, because of the unit replacements available in the battalion spare parts. Sheer bulk and weight prohibit the issue of the complete unit replacements at the battery level. The battery is equipped with sufficient tools, equipment and spare parts to effect the repair of defective parts but cannot replace the whole units. Consequently, the most efficient radar maintenance plan will take full advantage of the personnel, tools, equipment and spare parts available to the battalion as a whole. With a sound battalion radar maintenance plan, the battery-level problem is greatly simplified.

The unit commander, in most cases, will not be a technician capable of giving his radars the constant care and protection which they require. He must rely on his radar personnel. The most highly skilled radar maintenance man in the battalion should be assigned as the battalion radar maintenance mechanic. He coordinates the battalion radar maintenance plan, instructs and trains the other radar maintenance personnel under the supervision of the battalion radar officer. Each battery requires a qualified radar maintenance sergeant, and that job will keep him busy. Unfortunately, qualified personnel are not always available in the battery for such assignment. Every effort should be made to qualify men by attendance at school and more important still, by on-the-job training. However, by approaching the problem of radar maintenance from the battalion level, either with or without the assistanse of a Signal Radar Maintenance Unit, we obtain the maximum maintenance with the talent available. If a Signal Radar Maintenance Unit is attached they work directly under the supervision of the battalion radar officer.

The mission of all radar maintenance is to keep the radars operational. The personnel, tools and equipment provided in the T/O & E are adequate to accomplish this mission if their use is properly planned. Before outlining in detail this plan for radar maintenance, let us examine the duties and responsibilities of the radar maintenance personnel at the battery.

The battery radar mechanic is responsible for first echelon maintenance only. This consists of tuning, alignment, replacement of defective tubes, cleaning and preserving, entries in the maintenance log and supervision of the operation log.

In addition to the supervisory duties mentioned heretofore, the battalion mechanic is responsible for first echelon maintenance on all of the radar spare parts and spare units in the battalion supply. This includes periodic rotation of the spare units in the headquarters battery radar to make sure that they remain operational. He is responsible for the submission of requisitions for radar spare parts for the entire battalion and for the maintenance of stock record accounts on these parts.

This plan for radar maintenance can best be outlined by using a sample problem as an example. Suppose the radar at Battery A goes haywire. The radar mechanic in Battery A does three things in this order:

1. *Localizes the trouble within the radar, i.e., range unit, receiver, transmission lines.*
2. *Notifies the battalion radar officer or in his absence, the battalion radar mechanic.*
3. *Attempts to repair the radar by alignment or by replacing tubes.*

I want to emphasize point two before proceeding further. The battalion must be notified of the radar failure before time is consumed in attempted repairs. World War II experience proved that more operational time was lost by failure to call upon battalion for assistance immediately upon failure than time consumed in repairs. It's far better to call for battalion assistance and not need it than to need it and not have it.

Continuing with our sample problem, we move now to the battalion level to examine the action taken there upon receipt of the advice from Battery A that the radar is defective. The battalion radar mechanic will take the necessary replacement units to Battery A and with the aid of the battery mechanic, install them and get the radar operational. This accomplishes the principal mission of radar maintenance—the radar is once again on the air!

The battalion mechanic then returns the defective unit to the battalion maintenance shop, or if available the SRMU, for repair. Parts for the repair of the defective unit will be drawn from the battalion supply. When the defective unit is repaired and tested it is placed in the battalion supply. There is no need to be concerned about the serial numbers of the various radar units except to see that upon installation, numbers are entered into the maintenance log of the radar concerned. These serial numbers are not used in supply accountability.

In the event of a major radar breakdown in one of the gun batteries, the headquarters battery radar will be used to replace the defective gun-battery radar. The battalion will be responsible then for the repair or evacuation of the defective radar. It should be emphasized that the gun batteries have priority on operational radars.

The few principles outlined in this plan are simple, but they have proven to be sound in combat.

Captain Jack E. Vaughn graduated from OCS at Camp Davis, N. C. and was commissioned a second lieutenant in June 1942. He served as radar officer of the 161st AAA Gun Battalion in New Guinea and the Philippines. He is now on active duty as radar officer of the 260th AAA Group, D.C. N.G.

The One-Twenty Millimeter Gun

By First Lieutenant Elmo E. Cunningham, Arty.

The requirements of the Antiaircraft Artillery are greater and more diversified than ever before. Its general mission to attack and destroy hostile targets in the air, on the ground, and on the water means that AAA will continue to perform diversified roles with the field combat forces in all theaters of war, and at the same time in conjunction with the Air Defense Command maintain an extensive air defense wherever required.

To accomplish this big job we need the best weapons that can be developed. We also need to exploit the maximum capabilities of the weapons by a thorough understanding of their operation and use.

In regard to heavy AAA guns, we have heretofore considered the 90mm gun as being the standard. Its big brother, the 120mm gun has now established itself as a standard weapon. This was particularly evidenced by the AA expansion program which began in 1948. It is interesting to note that farsighted people began work on this weapon as early as 1939 with the purpose of providing a superior gun capable of dealing with any airplane then imaginable; this idea still prevails.

We will confine this discussion to the description and capabilities of the 120mm gun using the 90mm gun as a basis for comparison.

Description

The 120mm gun is a trailer type, mobile weapon weighing about 31 tons in traveling position when mounted on its two dual-wheel bogies. The towing vehicle is a high-speed tractor which weighs 38 tons when loaded with the 13-man crew, and 32 rounds of ammunition.

Time to emplace the gun requires 25 minutes for a well trained gun crew. Hydraulic jacks housed in the side outriggers are used to lift the gun from its supporting bogies before lowering the mount to the ground. A time-consuming part of emplacing is the necessity of racking the gun tube into battery. In the traveling position the gun tube is racked and secured 70 inches out of battery in order to equalize and distribute its weight over both bogies. For this reason the 120mm gun is never fired from its wheels.

The firing stability of the gun is remarkable. In the firing position the mount is supported on the ground by the pedestal and is stabilized by the four outriggers. If the emplacement site is smooth and even, the gun will settle and stabilize itself readily.

A high angle of fire is an essential characteristic of any AAA weapon. The maximum elevation of the 120mm gun is 80 degrees. This is made possible by the fact that the gun proper which consists of the gun and its recoiling parts is supported on its trunnions at the breech end of the gun. Continuous traversing of the top carriage which supports the tipping parts, is made through a complete circle of 360 degrees. The remote control system applies electrical data and power to automatically position the gun in azimuth and elevation under control of the remotely located director. In automatic operation, the remote control system replaces the men necessary to operate the gun manually; however, the system may be set for manual or match-the-pointer method when so desired.

The recoil mechanism, a conventional hydro-pneumatic type using oil and nitrogen gas, functions with smooth and rapid ease in absorbing the force of recoil and returning the gun quickly to battery. Maximum recoil, 39 inches, occurs at 45 degrees elevation; minimum recoil, 33 inches, occurs at minimum elevation. The tube has long recoil slide rails which ride in greased guide ways, and thus controls the path of recoil and holds recoil bucking action to a minimum. The recoiling characteristics of the gun are very satisfactory and largely contribute to the firing stability of the weapons.

The *fuze setter-power rammer* is an ingenious mechanism peculiar only to the 120mm gun. This device will automatically set a fuze and load a round in one cycle of two steps; or will omit the fuze setting process altogether if desired as when firing V-T ammunition. The ammunition is a special type which consists of two separate increments, the projectile and the sealed cartridge case. These are placed separately on the loading tray, and when the gunner pulls a clutch control lever, the fuze setter advances, sets the fuze, and retracts itself; the tray drops into line with the breech and the complete round is rammed into the chamber in one sweeping motion by the "mechanical arm" of the power rammer. The fuze setter-power rammer is mechanically complex and has been a source of malfunctions in the field. However, modifications and improvements are constantly improving its operation.

The hydro-pneumatic type equilibrator system on the 120mm gun is a departure from the conventional use of mechanical spring arrangements. This mechanism at times becomes somewhat temperamental in its functioning, and therefore deserves special attention.

All artillery guns require an equilibrator system, a mechanism which will counterbalance the weight of the overhanging tube, and mechanically equalize the effort required to elevate and depress the gun. The pulling energy of the perfect equilibrator system must vary proportionately with the changing weight of the gun tube as it is elevated and depressed. As the gun is elevated the center of gravity moves rearward toward the trunnions, thus requiring less

Lieutenant Cunningham graduated from the USMA in 1946. He is presently assigned as an instructor in the Heavy AA Section, Gunnery Dept., of the AAA and GM Branch of The Artillery School at Fort Bliss, Texas.

energy to compensate for balance.

The hydro-pneumatic equilibrator system derives its pulling energy through the use of two chains attached to the rear end of the cradle and further connected to piston rods and pistons which are housed in cylinders. A pressure tank located between the two cylinders is primarily filled with nitrogen gas under pressure, and in direct surface contact with a smaller volume of oil. The oil, under pressure, passes through manifold tubes into the cylinders and acts with hydraulic force against the rear of the pistons. As the gun is elevated requiring less balancing energy, the pistons move forward and a constant amount of oil is forced from the pressure tank into the cylinders. As the oil leaves the tank, the gas volume expands causing the gas pressure to decrease; thus, variable equilibrator pull is obtained throughout the elevating cycle.

If the gas expands too much or too little; or, too rapidly or too slowly because of an improper volume relationship between gas and oil, the gun will be in an unbalanced condition. Radically changing air temperatures, and sun heat create a troublesome effect on the system. Even work heat caused by gas compression during operation has a noticeable but not serious effect.

The original 120mm gun was equipped with only one central tank for gas and oil. There were no arrangements for compensating for changes in temperature resulting in changes of gas pressure. This meant that when the gun crew found the gun hard to elevate in the morning because of gas contraction overnight, the only remedy was to add nitrogen and reestablish the gas pressure. Then during the heat of the day, the gas would expand and the gun would be difficult to depress. This time the only remedy to reestablish gas pressure was to bleed nitrogen from the pressure tank. This naturally resulted in extra work and a wasteful consumption of nitrogen gas.

What greatly helped was the addition to the system of the pressure control unit, which consists of an oil reservoir tank, a fixed-displacement hydraulic pump driven by a ¾ horsepower electric motor, and a valve control assembly. The pressure control unit, which will compensate for a

120mm Gun Battery on Firing Range

120mm Gun March Order

45-degree temperature range, is so designed that when the gun becomes unbalanced, the unit is turned on and within several minutes the gun is automatically balanced. If the gun is muzzle heavy, oil is moved from the reservoir into the pressure tank thus decreasing gas volume and increasing its pressure. If the gun is muzzle light, oil is automatically transferred from the pressure tank back to the reservoir. Once the balanced condition is established, continued running of the pressure control unit has a neutral effect on the gas pressure.

At any time when oil is pumped from the pressure tank where it is in direct contact with gas, it will be aerated to some extent upon arriving at the reservoir. Under certain conditions excessive foaming of the oil will occur. This will result in a small loss of gas which liberates itself from aerated oil and escapes out through an air filter on top of the reservoir. Experience has shown that these faults are not serious and that intelligent use and care of the system has resulted in satisfactory operation.

A common fault on the part of using personnel is excessive operation of the pressure control unit. If, after a total of ten minutes of running the unit the gun isn't balanced, something is wrong. Gas pressure can be established by using personnel, but beyond this Ordnance should make the corrections. For best operating results in most climates, the equilibrator system should be checked and adjusted by Ordnance three times a year to take care of seasonal changes; if this is done a minimum of trouble will occur.

An idiosyncrasy of the 120mm gun worthy of mention is *breech-dial elevation difference*. The M10 director sends dial elevation to the gun; however, the actual breech or quadrant elevation of the gun tube is different from the dial elevation and has varying values throughout the elevating cycle. Some artillerymen believe that this breech dial elevation difference, inherent in the gun, can be ignored—that it can be corrected for in trial fire. It is true that it can be for the quadrant elevation at which the trial fire problem was conducted, but this method of correction will not apply for all other elevation values in the field of fire. The best solution is to compensate for the difference when orienting the gun. Orient at 800 mils elevation which is near the elevation midpoint, and where the breech-dial elevation difference is 3 mils. In other words, set 803 mils on the gunner's quadrant but in turn set 800 mils on the elevation dial of the gun.

Capabilities

We will consider the capabilities of the 120mm gun in two respects: firing and mobility characteristics.

The maximum vertical range is 19,150 yards and the maximum horizontal range, ground impact, is 27,162 yards. Note that this latter figure is almost 15 miles. At the present time these are beyond maximum effective ranges for AAA fire because of prediction limitations of the fire control equipment. Under good conditions a 120mm gun battery can deliver 20 seconds of effective fire on a conventional airplane flying at an altitude of 40,000 feet.

The rate of fire is from 10 to 15 rounds per minute. This is remarkable for a gun of this size but it is a serious limitation in terms of AAA fire because of the critically short time available to deliver fire on a fast flying target. This rate of fire is so limited because of the weight and size of the ammunition, and the method of setting fuzes and loading rounds. The maximum rate of fire attained is dependent on three principal factors. First the state of training of the gun crew; that is, the ease and speed attained in placing ammunition on the loading tray, and the skill and coordination of the gunner in controlling the automatic loader and manually firing the piece at the instant it is loaded. Another factor is whether or not mechanical-time fuzes are being used, requiring the use of the automatic fuze-setter. The third but less important factor is the magnitude of the fuze being set.

Mobility of the 120mm gun is the most limiting factor in tactical employment. 120mm gun battalions are semi-mobile in character because of insufficient organic transportation to move in one march—batteries have to be moved in echelon by shuttling methods. The standard speed of the M6 tractor when towing the gun on good primary roads is 15 miles per hour; across firm terrain, four miles per hour is optimum. To move a complete battalion a distance of 100 miles, using organic transportation, is a major move which under adverse conditions may require five days or more. Shipment by rail or water is the most efficient means of movement involving distances over 100 miles.

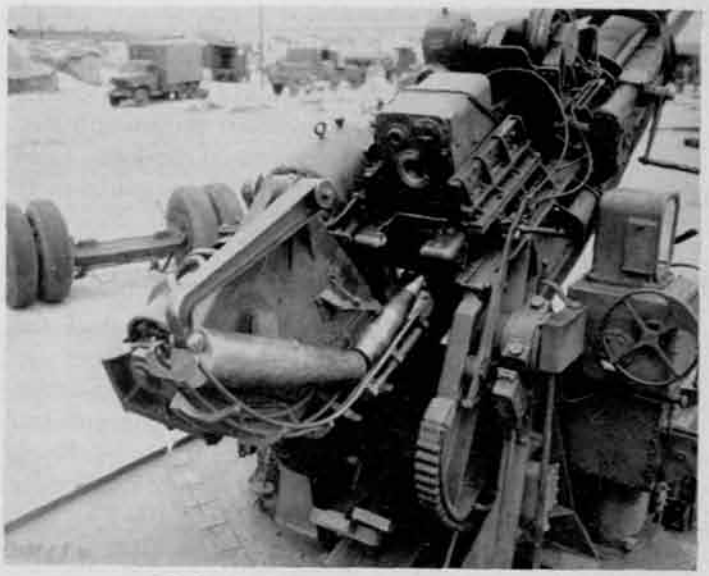

Mechanical Arm of Power Rammer

Prior to road movement, a detailed reconnaissance is mandatory; it should include every part of the route from the initial point of departure to the individual emplacement sites for each gun. River bridges other than those encountered on the best of primary roads present the greatest problems. When a bridge is less than a 70-ton capacity the necessary expedient is to unhook the tractor from the gun and move each across separately. The gun is towed from the opposite shore by means of a bridge-length cable. Elaborate reinforcement of bridges by engineers is a normal requirement in areas where streams are numerous.

Soft muddy terrain and deep sand are problematic but not serious for short distances. When occupying a battery position under these conditions it is best to guide each gun straight to its emplacement site and "drop it." Avoid maneuvering and turning movements as much as possible, but when necessary, make the turns as wide as any restricted area will permit. The dual-wheel bogies equipped with large balloon tires provide excellent flotation; however, when making a short turn in soft terrain, the inside track on the tractor tends to slide, spin, and burrow.

120mm vs. 90mm

So far we have dealt with the 120mm gun, in order to become familiar with its characteristics, certain peculiarities, and its capabilities and limitations. To better appreciate and understand these factors we will compare the 120mm gun with the 90mm gun by considering their favorable characteristics.

As a result of extensive firing tests conducted with both guns under controlled conditions, analysis revealed that the 90mm gun was slightly more accurate within its limited ranges than the 120mm gun. Just why this is true is not entirely known. Matériel errors from various sources create a cumulative error which is difficult to analyze; accuracy is by no means limited to the gun itself but involves all of the related battery equipment. Theoretically, the greater muzzle velocity of the 120mm gun should give it a prediction advantage over the 90mm gun. It appears that the accuracy capability of the 120mm gun has not as yet been fully exploited.

The lethality or extent of damage which a certain projectile burst can inflict at various distances from an aircraft is of primary consideration. A large airplane can absorb a great amount of damage at times without becoming a loss. The 120mm projectile weighs 50 pounds as compared to 24 pounds for the 90mm projectile. If the 90mm gun is more accurate at certain ranges, the greater blast and fragmentation effect of the 120mm projectile will greatly compensate for the difference.

The rate of fire of the 90m gun is twice that of the 120mm gun; however, in terms of total rounds per engagement the 120mm gun can compensate for the difference under certain conditions. For instance the 90mm gun can deliver about 20 seconds of effective fire on a target flying at 30,000 feet altitude, whereas the 120mm gun can fire for 35 to 40 seconds on the same target.

How many of what type of gun batteries are required and how should they be placed in AAA defense in order to inflict a desired rate of attrition on an attacking enemy air force? Or, with a limited amount of matériel available, how can the maximum possible attrition rate be obtained? These questions and their carefully computed answers form the basis of our new tactical doctrine for heavy AAA defense. Factors involved are the size of defended area, expected altitude of attack, terrain limitations, and primarily the *single shot probability* for each type of gun. The *single shot probability* is the computed and analyzed probability of one round destroying an aircraft based on the combination of lethality and accuracy for each particular gun under various combinations of attack conditions.

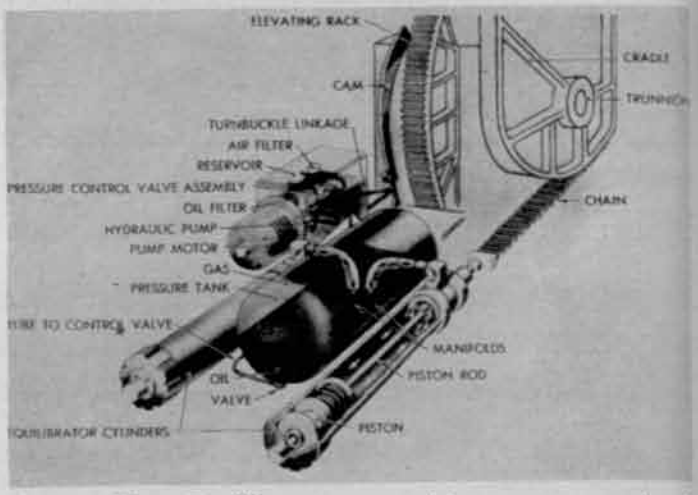

Phantom View: Equilibrator system with pressure control unit

The greater range of the 120mm gun will necessitate fewer batteries of this type to defend a given area against high altitude attacks. Its greater range also lends itself to more flexibility in the disposition of firing units in an AAA defense plan where terrain limitations are imposing factors.

When comparing the mobility of the two guns we are dealing with their greatest basic difference. The 90mm gun is fully mobile; it is one-half the weight, and has over twice the road speed of the 120mm gun which is classified as a semimobile weapon.

Conclusion

In light of the foregoing comparison of the two guns, certain broad principles in terms of general employment appear obvious.

The 90mm gun is the mobile and versatile weapon. Its tactical flexibility lends itself to field operations to include defense of river crossings, amphibious operations, and beachheads—in other words, defense against enemy tactical air force strikes on corps and army installations in the field.

The lack of mobility but greater range capabilities of the 120mm gun indicates that its best use is in permanent and semipermanent defenses such as in theater communications zones and particularly in the air defense of the zone of interior. It is against such areas that enemy strategic air forces flying in mass and at high altitudes are directed.

We must appreciate the fact that the 120mm gun and the 90mm gun are both indispensable in performing the diversified roles imposed by the AAA mission. Above all, the limitations peculiar to each gun must be acknowledged and respected.

(U.S. Army Photograph)

Major General Homer, *left background,* is shown with General J. Lawton Collins, Chief of Staff, United States Army, *center,* and Brig. Gen. Bryan L. Milburn, Chief of Staff, Fort Bliss, at a press conference held during General Collins' visit to the Post.

General John L. Homer, Fort Bliss Commander, Retires

Major General John L. Homer retired on 30 September after 43 years of active service in the Army. His successor in command of the Antiaircraft Artillery and Guided Missile Center is Major General John T. Lewis.

General Homer departed Fort Bliss on 24 September for Chicago, Illinois, where he will serve as the Deputy Director of Civil Defense. His address temporarily is: c/o Museum of Science and Industry, 57th and South Lake Shore Drive, Chicago 37, Illinois. Due to illness Mrs. Homer departed for Chicago earlier in the month.

Honoring General Homer, the troops at Fort Bliss turned out in review on 20 September. This review was attended by a huge throng of his civilian and military friends from El Paso, City of Juarez, and vicinity. In the evening, following the review, a reception was held at the Fort Bliss Officers Mess. The Chamber of Commerce and the civic clubs of El Paso held a farewell party for General Homer at the El Paso Country Club on September 23d.

The achievements at Fort Bliss during General Homer's command constitute a splendid chapter in the history of Antiaircraft Artillery.

Shortly after the Antiaircraft Artillery and Guided Missile Center was established at Fort Bliss in July 1946, General Homer, then Deputy Commander of the Panama District, was named as its first Commanding General. He also became Commandant of the Antiaircraft Artillery and Guided Missile Branch of The Artillery School and President of Army Field Forces Board No. 4. When he took over these new assignments General Homer found himself faced with a multitude of problems comparable to those under mobilization conditions.

The problems which faced the new Commanding General of Fort Bliss and its associated activities included: (1) planning, organizing and training of the U. S. Army's first Guided Missile units; (2) expanding the Antiaircraft Artillery in the Zone of the Interior twentyfold; (3) provision for family housing for his officers and men; (4) extension of ranges and maneuver areas to accommodate the expanded antiaircraft and guided missile program; (5) establishing new courses and expanding the facilities of the Antiaircraft Artillery and Guided Missile Branch of The Artillery School; (6) supervising and expediting studies and projects through Army Field Forces Board No. 4, with a view toward improving and obtaining new antiaircraft artillery and guided missiles weapons and equipment; (7) furnishing logistical support and solving administrative problems pertaining to activities at Fort Bliss; (8) regaining the confidence and support of the civilian community and the

HEADQUARTERS
ANTIAIRCRAFT ARTILLERY AND GUIDED MISSILE CENTER
FORT BLISS, TEXAS

TO THE OFFICERS, MEN AND CIVILIAN EMPLOYEES OF FORT BLISS:

It is with extreme regret that I conclude my 43 years of active service with the U. S. Army and with special regret that I leave what has become one of my most interesting and pleasant assignments ....that of Commanding General of the Antiaircraft Artillery and Guided Missile Center, Commandant of the Antiaircraft Artillery and Guided Missile Branch of The Artillery School and President of Army Field Forces Board No. 4 at Fort Bliss.

The problems which arose during the expansion and organization of the Antiaircraft Artillery and Guided Missile Center were difficult ones and could not have been solved without the wholehearted and capable support of every officer, enlisted man and civilian employee. The way in which these difficulties were solved is a tribute to every member of this command and I wish to express my gratitude for the fine cooperation and able assistance to everyone concerned.

Upon conclusion of my active service, one thought will remain uppermost in my heart and mind....the well-being of the Armed Forces of the United States.

J. L. Homer
J. L. HOMER
Major General, USA

further development of good will with the citizens of Mexico.

Operating with a small staff and without benefit of previous experience in this field, General Homer directed the organization of the first unit to employ guided missiles in tactical employment. This unit was brought to a high state of training and subsequently reorganized into a regiment, and later a group, to prepare for service firing of all types of rockets to perform necessary experimental work.

During General Homer's command the Guided Missile course was organized at the AA and GM Branch of The Artillery School. This is the only course of its nature, and selected personnel of the Army, Navy and Air Force have received training and instruction in this field.

As Commanding General of the Army's only Antiaircraft Artillery Training Center, General Homer was called upon to plan and direct the expansion of Antiaircraft Artillery from one group and two battalions to the present Army strength in AAA, with supporting troops. The normal difficulties of this expansion were aggravated by lack of enlisted personnel in both quantity and quality of the types required as cadres for the newly organized units and a serious shortage of Antiaircraft Artillery officers.

The necessity for conducting basic training for large numbers of fillers required for new units, the serious shortage of housing for units and for families of personnel, and serious shortages of material and equipment further complicated the expansion program. In spite of these and other difficulties, General Homer carried out the expansion, brought the new units to a high state of training, and in addition, trained thousands of individual replacements for assignment overseas and to other commands.

A constant concern for the welfare of the personnel of his command was an outstanding feature of General Homer's leadership. He was one of the first to realize that the alleviation of inadequate and unsatisfactory housing conditions in and around military reservations was a basic requirement for improving the caliber of Army personnel and for maintaining a high morale and reenlistment rate. His action brought about better conditions at Fort Bliss and in the neighboring communities to provide satisfactory housing conditions.

General Homer appointed a housing board at the Post to make a thorough study of the entire housing situation. As a result of the study he instituted a drive which resulted in providing Fort Bliss with 211 prefabricated homes for noncommissioned personnel and their families, the first project of its kind in the military service. A private trailer park to accommodate 200 families and sufficient trailers from Government sources to accommodate 300 additional families were the direct results of General Homer's interest in providing accommodations for military personnel and their families. After more than fifteen months of delay, an 800-unit housing project for Fort Bliss was processed under the Wherry Bill to become the first project of its kind to be completely processed through the Federal Housing Authority.

As a result of General Homer's housing program on the post and his efforts with civilian builders which sparked the largest year of home construction the City of El Paso had ever known, the morale of military personnel at Fort Bliss was greatly improved. The result was a saving to the Army of hundreds of trained and experienced noncommissioned officers whose services were urgently needed, but who would not have reenlisted at Fort Bliss had not the living conditions for families been alleviated.

The accelerated Guided Missile program and the Antiaircraft Artillery expansion program brought about the need

(U.S. Army Photograph)

General Bradley and Major General Homer talk over the situation during a review held at Fort Bliss on the occasion of General Bradley's visit.

Major General and Mrs. Homer ride as Grand Marshals in the Sun Carnival Parade at El Paso, Texas, January 1, 1950.

for additional firing ranges and maneuver areas. As a result of General Homer's efforts, Antiaircraft Range No. 2 (McGregor Range), of approximately 353,000 acres, and maneuver areas aggregating 125,000 acres, were obtained for military use. Successful acquisition of land was due, in a large measure, to his intimate knowledge of this area and the cordial relationships he had established with ranch operators and landowners in Western Texas and Southwestern New Mexico.

General Homer was primarily responsible for the development of Army-Community relations in the El Paso area that have been a model for Army-Community relations throughout the United States.

Early in General Homer's tour at Fort Bliss he recognized the necessity of developing strong and lasting friendly relations with the Mexican communities in the vicinity of Fort Bliss and El Paso. The esteem and good will he established with the Mexican Army and people were demonstrated when, in the City of Juarez, Mexico, on May 5, 1949, he was awarded the Military Medal of Merit, the highest award given by the Mexican Army.

After a short tour of duty at Fort Bliss, Senator Henry Cabot Lodge, Jr., in a report to the Chairman of the Armed Services Committee of the U. S. Senate, evaluated General Homer as follows: "In command of this enterprise, with its population of 22,000 people and its treasury of human intelligence, is Major General John L. Homer, a professional soldier in the finest sense of the word. His technical knowledge, his administrative capacity, his ability to meet an issue, his ingenuity and vigor and his vision all make him a fine public servant. It is most distressing to think that the Government is going to be deprived of his services in this vital and difficult field because of the fact that the law requires him to retire next October."

BIOGRAPHICAL SKETCH OF MAJOR GENERAL JOHN L. HOMER

Born September 16, 1888, in Mount Olive, Illinois, General Homer was graduated from the United States Military Academy and commissioned a second lieutenant of Coast Artillery on June 13, 1911.

In World War I, serving with 6th Coast Artillery, he participated in the St. Mihiel and Meuse-Argonne offensives as battery and battalion commander of the first American G.P.F. units.

Between the wars General Homer graduated from the Coast Artillery School, Command and General Staff, the Army Industrial College and the Army War College. He also served in important assignments at West Point, San Francisco, Chicago, and Washington.

On June 20, 1939, he took command of the 61st Coast Artillery (Antiaircraft) at Fort Sheridan, Illinois.

Promoted to the temporary rank of brigadier general on April 7, 1941, he was assigned to command the 40th Coast Artillery Brigade at Fort Sheridan.

From August 1941 to September 1942, he served as Chief of Staff, Iceland Base Command, and subsequently was awarded the Legion of Merit, "for exceptionally meritorious conduct in the performance of outstanding service" in that capacity.

He became a major general on August 3, 1942.

After his return to the United States he became Commanding General, New York-Philadelphia Sector, Eastern Defense Command, with station at Fort Hamilton, New York, and in February, 1944, was named Commanding General, Southeastern Sector, Eastern Defense Command, at Raleigh, North Carolina. In April, 1944, he was assigned to the Fourth Air Force, San Francisco, California, as Commanding General of the 4th Antiaircraft Command. He became Deputy Commander of the Panama Department in January, 1945.

He continued in this capacity until July, 1946, when he assumed command of the AAA and Guided Missile Center at Fort Bliss.

He has been awarded the following American and foreign decorations: Distinguished Service Medal; Legion of Merit; Army Commendation Ribbon; Ecuadorian Order of Arban Calderon, First Class; Panamanian Vasco Nunez de Balboa, Grand Officer; Chilean Order Al Merito (Gran Official); and the Medal of Military Merit, Mexico's highest military award, given by President Aleman.

General Homer also received an honorary degree of LL.D. from Blackburn College, in 1948.

Annual Coast Artillery Party

The officers and ladies, still nourishing happy memories of the Coast Artillery, continue the tradition of an annual social party in Washington.

The family reunion will be held this year at the Army and Navy Country Club, Friday, 24 November at 7:00 P.M. The signs indicate a corker.

Those who can arrange to be in Washington on that date should notify the Journal Editor.

HONOR ROLL

★★88th AAA Airborne Battalion
Lt. Col. Page E. Smith

★★228th AAA Group
Col. David W. Bethea, Jr., S.C. N.G.

★★107th AAA AW Battalion (M)
Lt. Col. Thomas H. Pope, Jr., S.C. N.G.

★★305th AAA Group
Col. John S. Mayer, N.Y. O.R.C.

★★21st AAA AW Battalion (SP)
Maj. John F. Reagan

★★59th AAA Battalion (SP)
Lt. Col. Landon A. Witt

★★69th AAA Gun Battalion (M)
Lt. Col. Alfred Virag

★101st AAA Gun Battalion (M)
Lt. Col. Henry J. Ellis, Ga. N.G.

★★19th AAA Group
Col. George R. Carey

★★39th AAA AW Battalion (M)
Lt. Col. Edward T. Ashworth

★★4th AAA AW Battalion (M)
Lt. Col. Chester T. Barton

★★503d AAA Operations Detachment
Maj. A. J. Montrone

★★75th AAA Gun Battalion
Lt. Col. John F. Ballentine

★40th AAA Brigade
Col. Morris C. Handwerk

★62d AAA AW Battalion (SP)
Lt. Col. Arthur F. Schaefer

★★226th AAA Group
Col. John D. Sides, Ala. N.G.

★★146th AAA AW Battalion (SP)
Lt. Col. R. H. Franklin, Mich. N.G.

★★70th AAA Gun Battalion
Lt. Col. Francis Gregory

★★68th AAA Gun Battalion
Lt. Col. Raymond C. Cheal

★★10th AAA Group
Col. W. H. Hennig

★★95th AAA Gun Battalion
Maj. Nelson C. Wahlgren

★79th AAA Gun Battalion
Lt. Col. Henry W. Ebel

★★768th AAA Gun Battalion
Lt. Col. Theodore H. Kuyper, Ill. N.G.

★229th AAA Group
Col. Edward Isaachsen, Ill. N.G.

★★207th AAA Group
Col. George T. Stillman, N.Y. N.G.

★★204th AAA Group
Col. John Barkley, La. N.G.

★★251st AAA Group
Col. Anthony Long, Cal. N.G.

★★35th AAA Brigade
Brig. Gen. Robert W. Berry

107th AAA Brigade
Col. John W. Squire, Va. N.G.

★340th AAA AW Battalion (M)
Lt. Col. George V. Selwyn, D.C. N.G.

★★103d AAA Brigade
Brig. Gen. Russell Y. Moore, Conn. N.G.

★★212th AAA Group
Col. Joseph A. Moore, N.Y. N.G.

★★227th AAA Group
Col. Percy L. Wall, Fla. N.G.

11th AAA Group
Col. John L. Golf

★★34th AAA AW Battalion
Lt. Col. James R. Gifford

★★527th AAA AW Battalion
Lt. Col. Joseph H. Cunningham, La. N.G.

71st AAA Gun Battalion
Lt. Col. Clair M. Worthy

443d AAA AW Battalion (SP)
Lt. Col. Robert G. Finkenaur

★★715th AAA Gun Battalion
Lt. Col. William H. Uter, N.Y. N.G.

★★265th AAA Gun Battalion
Maj. Harry Botts, Fla. N.G.

★★705th AAA Gun Battalion
Lt. Col. M. P. DiFusco, R.I. N.G.

753d AAA Gun Battalion
Lt. Col. William A. Smith

★★105th AAA Brigade
Brig. Gen. Alfred H. Doud, N.Y. N.G.

★★105th AAA Operations Detachment
Capt. Paul D. Vancelette, N.Y. N.G.

★★127th AAA AW Battalion (SP)
Lt. Col. Hartley G. White, N.Y. N.G.

★★518th AAA Gun Battalion
Lt. Col. Harry Hewitt

★★214th AAA Group
Col. Jack G. Johnson, Ga. N.G.

★★202d AAA Group
Col. John W. Anslow, Ill. N.G.

313th AAA Group
Col. A. F. Hoele, Pa. O.R.C.

★78th AAA Gun Battalion
Lt. Col. Thomas W. Ackert

★698th AAA Gun Battalion
Lt. Col. Frank Monico, Ill. N.G.

★★97th AAA Group
Col. Joy T. Wrean

★★507th AAA Operations Detachment
Capt. Edwin F. Bookter

★65th AAA Gun Battalion
Lt. Col. Robert F. Moore

★712th AAA Gun Battalion
Lt. Col. Harry H. Taylor, Jr., Fla. N.G.

22d AAA AW Battalion
Lt. Col. Robert J. Jones

★374th AAA Group
Col. Thomas F. Mullaney, Jr., Ill. O.R.C.

★867th AAA AW Battalion
Maj. Samuel M. Arnold

★★216th AAA Group
Col. William E. Johnson, Minn. N.G.

★★302d AAA Group
Lt. Col. Arthur R. Arend, Ohio O.R.C.

★★398th AAA AW Battalion (SP)
Lt. Col. Louis B. Dean

JOURNAL HONOR ROLL CRITERIA

1. To qualify for a listing on the JOURNAL Honor Roll, units must submit the names of subscribers and total number of officers assigned to the unit on date of application.
2. Battalions with 80% or more subscribers among the officers assigned to the unit are eligible for listing, provided that the unit consists of not less than 20 officers.
3. Brigades and groups with 90% or more subscribers among the officers assigned to the unit are eligible for listing, provided that the unit consists of not less than seven officers.
4. Units will remain on the Honor Roll for one year even though they fall below the 80% requirement during the year.
5. Lists of subscribers and statement of number of assigned officers must be submitted annually by units in order to remain on the Honor Roll.
6. Battalions with 90% of officers subscribing will qualify for one star placed before the unit's designation on the Honor Roll. Battalions with 100% subscribers will qualify for two stars.
7. Groups and brigades cannot qualify for one star but may qualify for two stars with 100% subscribers.

GUERRILLA*

By Colonel Samuel B. Griffith, II, USMC

PART I

Orthodox military thought has consistently deprecated the achievements and potentialities of partisan or guerrilla operations in warfare. It is difficult to discover a basis for this opinion; it is certainly not founded on an objective analysis of history, for experience since Napoleonic times indicates clearly that guerrilla operations can make a decisive contribution to the outcome of a war. Partisans have not won wars in the past nor will they win them in the future. But their activities can be of a magnitude and intensity sufficient to prevent one side or the other from winning.

Guerrillas are a feature common to all ideological wars. Their operations have been a significant aspect of such struggles since the days of our Revolution, and should there be a third great war they will inevitably be of the greatest importance. In a future war in which ideological issues are clearly drawn guerrilla activities will be dispersed over vast areas and will draw sustenance from all levels of populations. The quality of operations will be significantly improved over the past; modern weapons and equipment will make the guerrilla of the future a formidable antagonist in the type of warfare that he will conduct.

For these reasons the history of guerrilla experience cannot be ignored. It was the guerrillas of Spain and Russia quite as much as the generalship of Wellington and Kutuzov that brought Napoleon to St. Helena. This was not appreciated in 1815; it may not be fully appreciated in 1950. Nevertheless, it is true, and it counsels us to more fully acquaint ourselves with partisan theory and partisan action.

The assumption that guerrilla warfare cannot flourish as in the past is faulty. The structure of western industrial society provides a fertile field for partisan operations, and it is a safe assumption that guerrillas of the future will have ample opportunity for extremely effective work.

It is equally incorrect to assume that the airplane has limited either the scope or effectiveness of guerrilla activities. Guerrillas cannot be discovered by aerial cameras or observers and they do not concentrate to present profitable targets to bombardiers or aerial gunners. The airplane proved in the last war that it can be an important instrument for the support of guerrilla operations; it is of little if any use in directly combating them.

In a study of guerrilla war in history we find quite definite patterns constantly recurring. These recurring patterns are to be found on both sides of the cloth, so to speak. That is, they repeat themselves in terms of guerrilla theory and action, and in terms of the steps taken to counter such actions. One finds Mosby in Virginia, Lawrence in Arabia, and Mao Tze Tung in China, three "intellectual" guerrilla leaders, expressing identical tactical theories and putting them with consistent success to the test of action. On the other hand one discovers the French in Spain, Kitchener in South Africa, and the Japanese in North China attempting in turn to suppress guerrilla warfare by measures which were uniformly unsuccessful.

Spain between the years 1808 and 1813 was the scene of nationwide guerrilla operations which in point of intensity and effectiveness have not been equalled in history. Dozens of talented guerrilla leaders were developed, and to their skill and daring Wellington owed a great measure of his success in the Peninsular War. The guerrillas themselves could not have driven the French from Spain, but neither could Wellington have done this without their aid and the Great Duke never deprecated the contributions of the *guerrilleros* to his success.

Here we see for the first time strategic and tactical coordination between conventional formations of both the army and the navy and organized guerrillas; we may trace the development of poorly equipped bands into well trained, highly mobile, hard striking combat groups, elusive and pervasive as mist. In their independent operations, the Spanish *guerrilleros* established the general pattern of partisan war with which we are familiar.

Frequently week after week passed with no communication between the Emperor in Paris, the higher headquarters of the French armies in Spain, and their columns operating in the field. Hundreds of couriers carrying official despatches were captured, foraging parties were ambushed and annihilated, and isolated garrisons were overwhelmed in surprise attacks. Supplies for the armies were intercepted, great sums of money were stolen from paymasters, traitors on whom the French relied for information were searched out and summarily executed. These activities produced in

*Reprinted with permission of *Marine Corps Gazette*.

Col. Griffith graduated from the Naval Academy in 1929 and was commissioned in the Marine Corps. Prior to World War II he studied Chinese and served in Nicaragua and China. During the war, he served in England and commanded the First Marine Raider Battalion on Guadalcanal. He is presently attached to the Department of Strategy and Tactics of the Naval War College and is a contributor to service journals.

the French feelings of complete frustration, which in turn caused them to take punitive measures that were ill-considered and served only to intensify resistance. Heavy detachments were required to guard the vulnerable lines of communication, to hold the principal cities and to protect convoys with the result that forces available for the field were reduced in strength. Thus were a few able to immobilize many, to retain the initiative, to create consternation and to produce results out of all proportion to their numerical strength.

The first popular reactions to Napoleon's iniquitous coup d'etat in Spain took place on 24 May, 1808 in the Asturias, the province that was over a hundred years later to contribute the most hard-bitten fighting men in Spain to the Republican ranks.

The first of the great Spanish *guerrilleros* was Juan-Martin Diaz, nicknamed "El Empecinado," "The Obstinate One," who in the fall of 1809 "raised large bands during the absence of the normal garrisons and swept the countryside capturing convoys and cutting the lines of communication—The French governors on every side kept reporting their perilous position when they could get a message through to Madrid."

The Emperor bombarded his commanders with advice as to how to repress the guerrillas. His orders resulted "in much marching and countermarching of the newly arrived troops but to little practical effect in the way of repression for skilled leaders like Mina, the Empecinado and Julian Sanchez nearly always slipped between the fingers of their pursuers."

Sir Charles Oman estimates that in 1810-11, there were never more than 20,000 guerrillas under arms between the Guadarrama Mountains (north of Madrid) and the Bay of Biscay. Yet he writes: "despite their weakness in the open field . . . they rendered good services to Spain and incidentally to Great Britain and to all Europe by pinning down to the soil twice their numbers of good French troops. Anyone who had read the despatches of Napoleon's 'Military Governments' or the diaries of the officers who served in Reille's or Dorsenne's or Caffarelli's flying columns will recognize a remarkable likeness between the situation of affairs in Northern Spain during 1810 and 1811 and that in South Africa during 1900 and 1911. Lightly moving guerrilla bands unhampered by a base to defend or a train to weigh them down and well served as to intelligence by the residents of the countryside can paralyze the action of an infinitely larger number of regular troops."

By January 1811, Napoleon (who had lost patience with generals unable to suppress the guerrillas in the north of Spain) named Marshal Bessières to command the "Army of the North" and gave him among other missions that of putting an end to the partisans. This proved to be a task quite beyond the means at the Marshal's disposal, and he reported to the Emperor that the guerrilla bands were daily increasing and that if he concentrated as much as a third of his 60,000 effectives to subdue them, all communications would be lost. He concluded this despatch by pointing out that victory in Spain did not depend upon the outcome of a battle with the English, but rather upon the pacification of the country. His master, obsessed with the idea that a brilliant campaign culminating in a climactic battle would bring the war in the Peninsula to an end, was not interested in such reports. He considered Bessières a pessimist. As a matter of fact, the marshal was an optimist.

During the spring and early summer the *guerrilleros* in the north were receiving arms and equipment from British cruisers operating in the Bay of Biscay and were steadily becoming stronger. The expedients the French adopted to control them were fruitless. Destruction of towns, taking of hostages, devastation of the countryside, execution of prisoners, construction of blockhouses—all were in vain. Occasionally a French flying column managed to catch a guerrilla group unaware and destroy or scatter it—if the latter the partisans soon reassembled none the worse for wear.

The French commander Abbe signalized the opening of the year 1812 by the issuance of a proclamation which prohibited "quarter" for *guerrilleros,* made their families and villages responsible for them and authorized the execution of hostages. Mina promptly announced that he would shoot four Frenchmen for every Spaniard, a threat that he carried out with punctuality and exactitude. Abbe withdrew his proclamation. The French concentrated 30,000 troops to destroy the partisan chief and his band of 3,000. As the invaders busied themselves trying to track him down, Mina fell upon an immense convoy escorted by a force of 2,000 troops and completely destroyed it. The entire Army of the North spent the remainder of April and the month of May in futile pursuit of this phantom.

. . . . .

Moscow, the capital, beckoned Napoleon. Once the Emperor had established himself in the Kremlin the Tsar would come to terms; he would have to; everyone had always done it that way. He could not comprehend why the Tsar would not sue for surrender after Borodino. He berated the Russian generals as inept fools and cowards because after Borodino they would not stand and fight, but chose instead to fall back slowly laying waste the countryside and arming the peasants. Swarms of hard riding Cossacks and partisans attacked the flanks, rear and trains of the French Army. The people burned the hayricks and villages, drove off the livestock, fired the crops standing in the fields and poisoned the wells. When Napoleon reached Moscow he established himself in the Imperial apartments in the Kremlin from whence he vainly endeavored to convince the Tsar and Kutuzov that Russia was beaten. But the Russians would not agree. Finally, frustrated, and unaware that the march to Moscow was but the prelude to the greatest debacle to be recorded in the annals of military history, the Emperor gave the order for retreat.

From Moscow to the borders of Poland his freezing, starving army fell back through burned-out towns from which all the inhabitants had fled. On the way the columns were continually harassed:

"Cossacks kept up perpetual raids along the roads, which they constantly crossed between one division and another —or even, when there was a gap, between one regiment and another. . . . Wherever transport wagons were moving along in disorder, or unarmed stragglers were making their way as best they could, the Cossacks improvised sudden attacks, killing and wounding, robbing all those whose lives they spared, and looting wagons and carriages when they came upon them.

"It is not difficult to imagine the perturbation spread by such tactics and their effects on the Army's morale. What was worse, they made communications extremely difficult, not only between one division and another. The General Staff, as I have already explained, received no reports; its orders either did not arrive at their destination or if they arrived were too late to be of any use. Staff officers, who braved every sort of danger, were frequently captured. Then there was the ice . . . of the many who went after food, but few returned . . . Cossacks and armed peasants captured many of those stragglers."

Years later Leo Tolstoi in *War and Peace* described the sombre spectacle of the Grande Armée stumbling down the ice-covered road to Smolensk toward the border of Poland; herded along by Kutuzov, done to death by famine, winter, the blindness of its commander, and the Cossacks and hordes of peasant guerrillas. This is what he wrote about the nature of the death struggles of the French Army, and about the agents who presided at that historic scene:

"The battle of Borodino with the occupation of Moscow and the flight of the French, that followed without any more battles, is one of the most instructive phenomena in history.

"All historians are agreed that the external activity of states and peoples in their conflicts finds expression in wars; that the political power of states and peoples is increased or diminished as the immediate result of success or defeat in war.

"Strange are the historical accounts that tell us how some king or emperor, quarrelling with another king or emperor, levies an army, fights a battle with the army of his foe, gains a victory, kills three, five, or ten thousand men, and consequently subdues a state and a whole people consisting of several millions; and incomprehensible it seems that the defeat of any army, one hundredth of the whole strength of a people, should force that people to submit. Yet all the facts of history (so far as we know it) confirm the truth of the statement, that the successes or defeats of a nation's army are the causes or, at least, the invariable symptoms of the increase or diminution of the power of a nation. An army gains a victory, and immediately the claims of the conquering people are increased to the detriment of the conquered. An army is defeated, and at once the people loses its rights in proportion to the magnitude of the defeat; and if its army is utterly defeated, the people is completely conquered. So (according to history) it has been from the most ancient times up to the present. All Napoleon's earlier wars serve as illustrations of the rule. As the Austrian armies were defeated, Austria was deprived of her rights, and the rights and power of France were increased. The victories of the French at Jena and at Auerstadt destroyed the independent existence of Prussia.

"But suddenly, in 1812, the French gained a victory before Moscow. Moscow was taken, and in consequence of that, with no subsequent battles, not Russia, but the French army of six hundred thousand, and then Napoleonic France itself ceased to exist."

. . . . .

The curtain next rises in the Middle East where Col. T. E. Lawrence—Lawrence of Arabia—developed and applied his theories of guerrilla warfare against the Turks. The British by this time had obviously learned something from history and they empowered Lawrence to dangle the apple of freedom and independence before the eyes of the Arabs in exchange for active participation in the war and the cooperation of the world of nomadic Islam against the Turk.

Lawrence made a unique contribution to military thought. He perceived immediately that one of the great strengths of guerrillas was their pervasiveness; their ubiquity. Guerrillas could be everywhere, but at the same time be nowhere. To permit—indeed to encourage—the enemy to occupy cities and towns was not a bad idea, providing one could isolate them and keep them isolated. This the Arabs did with the Turkish garrison in Medina which sat in trenches destroying its own power of movement by "eating the transport" it "could no longer feed." The guerrillas ranged over 99% of Arabia; Turkish military power decayed in Medina and in their isolated outposts.

Lawrence developed his theory of guerrilla warfare while he lay ill for several months. He was not too ill to reflect.

"I began idly to calculate how many square miles . . . perhaps one hundred and forty thousand square miles. And how would the Turks defend all that? No doubt by a trench line across the bottom, if we came like an army with banners; but suppose we were (as we might be) an influence, an idea, a thing, intangible, invulnerable, without front or back, drifting about like a gas? Armies were like plants,

immobile, firm rooted, nourished through long stems to the head. We might be a vapor, blowing where we listed. Our kingdoms lay in each man's mind; and as we wanted nothing material to live on, so we might offer nothing material to the killing. It seemed a regular soldier might be helpless without a target owning only what he sat on, and subjugating only what, by order, he could poke his rifle at.

"Then I figured out how many men they would need to sit on all this ground, to save it from our attack—in depth, sedition putting up her head in every unoccupied one of those hundred thousand square miles. I knew the Turkish army exactly, and even allowing for their recent extension of faculty by aeroplanes and guns and armored trains (which made the earth a smaller battlefield) still it seemed that they would have need of a fortified post every four square miles, and a fort would not be less than twenty men. If so they would need six hundred thousand men to meet the ill wills of all the Arab peoples, combined with the active hostility of a few zealots.

"How many zealots could we have? At present we had nearly fifty thousand: sufficient for the day. It seemed the assets in this element of war were ours. If we realized our raw materials and were apt with them, then climate, railway, desert and technical weapons could also be attached to our interests. The Turks were stupid; the Germans behind them dogmatical. They would believe that rebellion was absolute, like war, and deal with it on the analogy of war. Analogy in human things was fudge anyhow; and war upon rebellion was messy and slow like eating soup with a knife."

(To be continued)

Why Are We Fighting In Korea?

The following statement was written exclusively for the Armed Forces by Ambassador Warren R. Austin, United States Representative in the United Nations. Although addressed to the United Nations Forces in Korea, Mr. Austin's statement is of vital importance to every man and woman in the Armed Forces.

UNITED STATES MISSION
TO THE UNITED NATIONS

August 25, 1950

To the United Nations Forces in Korea:

You and I have a great deal in common. Although our duties and responsibilities are somewhat different, we are partners in the first international "police action" in history. We are working together to suppress the lawbreakers who have attacked not just Korea, but who have attacked the whole United Nations effort to build a peaceful and a better world. What we do at Lake Success and what you do in Korea affects the future of people everywhere.

Our object together is to halt aggression. The world failed to do that when Hitler and Mussolini and the Japanese were rising to power nearly 20 years ago. Aggression in Ethiopia, Manchuria and Austria went unchallenged. Today the story is different. The United Nations has *successfully* challenged aggression in a number of instances.

About three years ago war broke out in Greece. It turned out that the Communists were behind it—not just Greek Communists, but Communists from countries north of Greece. The United Nations sent military observers to that northern border and through their eyes the whole world saw that in reality it was Communist aggression from the outside that menaced Greece—and the rest of the world, too. In that instance Greek soldiers, aided by the United States and British equipment, stood off and defeated the Communists for themselves and for the rest of us.

Then, the Communists centered their attack on Berlin. The Soviet Union tried to squeeze the rest of the world out of that city. Illegal force was defeated once more—by a dramatic United States-British-French airlift, by German citizens willing to endure difficult privations, by United Nations peace negotiations.

Korea was next, and the worst of all. What is happening in Korea is part of the Communist effort to dominate the world. Your victory in Korea will be the most crushing setback the Communists have ever received. Your victory will demonstrate that the free peoples of the world are determined that aggression will not be permitted to succeed —even when it is attempted in a place so remote from our homes as Korea. Fifty-three nations are united in recognizing that a battle for freedom and for world law and order is now being fought. We know that aggression must be stopped before it gets a head start if we and the peoples of other countries are to remain free.

Warren R. Austin

WARREN R. AUSTIN
United States Representative in the United Nations

ANTIAIRCRAFT JOURNAL

Membership Listing

U. S. Coast Artillery Association

As of 10 September 1950

The JOURNAL is including this Membership Listing in this issue as a ready reference for subscribers desiring to contact friends whose addresses they no longer have. The addresses are those given by the persons concerned. In the event there are any changes, we shall be pleased to make corrections in the November-December issue if notification is received by 18 November. For economy reasons the list is printed as an integral part of the JOURNAL. This list contains only the names of members whose addresses are available.

Antiaircraft **JOURNAL**

631 Pennsylvania Avenue, N.W. WASHINGTON 4, D. C.

Membership Listing

LIEUTENANT GENERALS

Embick, Stanley D. (Ret), 2118 Wyoming Ave., N.W., Washington, D. C.
Lutes, LeRoy, Commanding General, Fourth Army, Ft. Sam Houston, Tex.

MAJOR GENERALS

Baker, Walter C. (Ret), Kennedy Warren Apts., 3133 Connecticut Ave., Washington, D. C.
Bradshaw, Aaron, Hq., EUCOM, APO 403, New York, N. Y.
Cole, W. E. (Ret), 2555 Waterside Dr., Washington, D. C.
Crain, J. K. (Ret), 2863 29th St., N.W., Washington, D. C.
Curtis, Charles C., Cp. Gordon, Ga.
Foster, E. M., Chief of Finance, Gravelly Point, Washington 25, D. C.
Goodman, Wm. M., 1458 Hampton Rd., San Marino 9, Calif.
Green, Joseph A. (Ret), 315 Blue Bonnet Blvd., San Antonio 2, Tex.
Hausauer, Karl F., Hq., N. Y. National Guard, 270 Broadway, New York 7, N. Y.
Homer, John L., c/o Museum Sc. & Industry, Chicago, Ill.
Irvine, W. W., Hq., Army AA Command, Mitchell AFB, N. Y.
Jarman, Sanderford (Ret), 3915 Oliver, Chevy Chase, Md.
Lemnitzer, L. L., Qtrs. No. 1, Ft. L. J. McNair, Washington 25, D. C.
Lewis, John T., AAA & GM Cen., Ft Bliss, Tex.
Loughry, Howard (Ret), Supt., Soldiers' Home, Washington, D. C.
Marquat, William F., GHQ, SCAP, APO 500, c/o PM, San Francisco, Calif.
Oldfield, H. R. (Ret), 14425 25th S.W., Seattle 66, Wash.
Ottman, William, Ritz Carlton Hotel, New York 17, N. Y.
Richardson, Wm. L., Patrick AFB, Cocoa, Fla.
Shedd, W. E. (Ret), Palma Sola Park, Bradenton, Fla.
Smith, Frederic H. (Ret), Hampton, Va.
Sunderland, A. H. (Ret), Hampton, Va.
Todd, Henry (Ret), 2301 Connecticut Ave., N.W., Washington, D. C.
Tschappat, W. H. (Ret), East Falls Church, Va.
Weible, W. L., CG, Japan Log. Comd., APO 343, c/o PM, San Francisco, Calif.
Wilson, Walter K. (Ret), 1661 Crescent Pl., N.W., Washington 9, D. C.
Wilson, William H. (Ret), 20 Harrington Terrace, Burlington, Vt.

BRIGADIER GENERALS

Badger, G. M. (Ret), Rm. 330 Martin Bldg., Columbus, Ga.
Berry, Robert W., Hq., Western Army AA Command, Hamilton AFB, Calif.
Bowen, Charles F., State House, Concord, N. H.
Clark, Frank S. (Ret), 2109 Kecoughtan Rd., Hampton, Va.
Crawford, J. B. (Ret), 365 South Gay St., Auburn, Ala.
Crichlow, R. W., 411 W. Rosemary Lane, Falls Church, Va.
Cunningham, J. H., 44 River Rd., Gloucester, Mass.
Doud, Alfred H., 89 East Ave., Rochester 4, N. Y.
Drowne, H. R., Jr., 400 Madison Ave., New York 17, N. Y.
Evans, E. A., 2517 Connecticut Ave., N.W., Washington, D. C.
Fellers, Bonner (Ret), 3535 Springland Lane, N.W., Washington, D. C.
Flory, L. D. (Ret), 3224 Cathedral Ave., N.W., Washington, D. C.
French, Charles A. (Ret), 4036 Via Solano, Palos Verdes Estates, Calif.
Hamilton, W. M., 103d AAA Brigade, Ft. Bliss, Tex.
Hardaway, F. P. (Ret), 427 N. Florissant Rd., Ferguson 21, Mo.
Hardy, David P. (Ret), 500 Rivera St., San Francisco 16, Calif.
Hayden, F. L., Qtrs. 151, Ft. Lewis, Wash.
Henagan, J. C., 401 E. Washington St., Dillon, S. C.
Hesketh, William (Ret), 87 Alpine Ave., Bridgeport 8, Conn.
Holmes, A. B., 6 Elm St., Tupsham, Me.
Holmes, Henry B. (Ret), 1834 Park Ave., Richmond, Va.
Hopkins, Jay P., 530 E. State St., Cassopolis, Mich.
Johnson, Jacob C. (Ret), 6301 Delaware St., Chevy Chase, Md.
Kelly, Paul B., APO 500, c/o PM, San Francisco, Calif.
Klein, Julius, Westminster Bldg., 110 S. Dearborn, Chicago 3, Ill.
Lawton, W. S., Hq., AFF, Ft. Monroe, Va.
Longino, O. H. (Ret), Rt. No. 1, Palma Sola, Bradenton, Fla.
Loomis, H. S. (Ret), 3109 South St., N.W., Washington, D. C.
McConnell, Frank C., Hq., 5th Inf. Div., Ft. Jackson, S. C.
McSherry, Frank J. (Ret), 3232 Garfield, Washington, D. C.
Metzger, E. H. (Ret), 2260 Peachtree Rd., Atlanta, Ga.
Mickelsen, S. R., P&O Div., Pentagon, Washington 25, D. C.
Milburn, Bryan L., GHQ, FEC, APO 500, c/o PM, San Francisco, Calif.
Mitchell, J. B. (Ret), Hobe Sound, Fla.
Moore, R. Y., Route 3, Winstead, Conn.
Newton, H. P., 35 Hybiscus Lane, New Orleans, La.
Nichols, H. F. (Ret), 276 32d Ave., San Francisco, Calif.
Parks, Harlan C., Bolling AFB, Washington, D. C.
Pendleton, R. T. (Ret), Palma Sola, Bradenton, Fla.
Pendry, Bryer H. (Ret), 1012 Gates Ave., Brooklyn, N. Y.
Phillips, T. R. (Ret), Brookings Institution, 722 Jackson Pl., N.W., Washington, D. C.
Rinard, Paul R., Del. NG, Wilmington, Del.
Rutledge, Paul W., Hq., Eastern Army AA Command, Stewart AFB, Newburgh, N. Y.
Sage, Charles G., PO Box 1018, Santa Fe, N. M.
Schuyler, C. V., Qtrs. 21-A, Ft. Myer, Va.
Starr, R. E. (Ret), Gloucester, Va.
Strong, Alden G. (Ret), 2301 Connecticut Ave., N.W., Washington, D. C.
Tilton, Rollin (Ret), 100 Hampton Roads Ave., Hampton, Va.
Tobin, Ralph C., Pen Craig, Newport, R. I.
Townsend, J. R. (Ret), 1821 Dalton Rd., Greensboro, N. C.
Underwood, Edgar H. (Ret), 3209 Riverview Blvd., Bradenton, Fla.
Weeks, L. B. (Ret), 5704 York Lane, Bethesda, Md.
Williford, Forrest E. (Ret), Box 23, 206 Eakin St., Blacksburg, Va.

COLONELS

Abbey, Walter W., 2217 "C" St., Vancouver, Wash.
Adair, A. C., RFD 3, Vienna, Va.
Adams, E. F., 2300 Connecticut Ave., N.W., Washington 8, D. C.
Adams, Gilbert N., Arty. Sec., Hq., 8th Army, APO 343, c/o PM, San Francisco, Calif.
Alter, Dinsmore, Box 9787, Los Feliz Sta., Los Angeles 27, Calif.
Allingham, S. C., 621 N. Workman St., San Fernando, Calif.
Allport, H. H., 209 S. LaSalle St., Chicago, Ill.
Amoroso, A. A., ROTC Hqs., Georgia Tech, Atlanta, Ga.
Anderson, G. B., Norwich University, Northfield, Vt.
Anderson, R. A., 141 Mead Rd., Decatur, Ga.
Anderson, W. N., 1558 Brookline Blvd., Pittsburgh 26, Pa.
Anslow, John W., 110 S. Dearborn St., Chicago, Ill.
Argo, Reamer W., 9 Southgate Ave., Annapolis, Md.
Arlett, G. N., Rt. 3, Box 3474, Auburn, Calif.
Armstrong, J. F., 3509 Buena Vista Ave., Glendale 8, Calif.
Arthur, Robert, 4123 S. Saratoga St., New Orleans 15, La.
Arthurs, J. F., Jr., 515 N. 1st St., Marshalltown, Iowa.
Ashton, J. J., 805 W. 32d St., Wilmington, Del.
August, A. F., 208 Cliff Ave., Winthrop 52, Mass.
Babers, Frank H., De Neane Drive, Hillandale, Silver Spring, Md.
Bailey, D. J., Hq., Western Army AA Command, Hamilton AFB, Calif.
Bailey, H. C., 2901 N. Harrison St., Wilmington 270, Del.
Bain, James G., 917 Ridgecrest Circle, Albuquerque, N. M.
Baker, A. S., 197th AAA Group, Cp. Gordon, Ga.
Baker, P. I., Orangeburg, N. Y.
Ballough, W. K., 158 Michigan Ave., Daytona Beach, Fla.
Barber, Edward, 809 Second St., Alexandria, Va.
Barkley, John, Bldg. 67, Jackson Barracks, New Orleans, La.
Barrows, E. R. (Ret), Palma Sola Park, Bradenton, Fla.
Barry, Chas. J., Brighton Hotel, 2123 California St., N.W., Washington, D. C.
Bartlett, L. W., 19 Half-Moon Rd., El Paso, Tex.
Bates, James C. (Ret), RFD, North Chichester, N. H.
Baynes, W. H., Holloman AFB, Alamogordo, N. M.
Bean, W. F., Lancaster, N. H.
Beaver, Francis L., Hq., 40th AAA Brig., APO 503, c/o PM, San Francisco, Calif.
Behr, F. J., 727 Cowper St., Palo Alto, Calif.
Bender, A. H., Hq., Eastern Army AA Command, Stewart AFB, Newburgh, N. Y.
Bennett, E. E., 3210 Riverview Blvd., Bradenton, Fla.
Bennett, Rowland K., 40-27 218th St., Bayside, L. I., N. Y.
Bentley, G. T., 23731 Marshall Ave., Dearborn, Mich.
Benz, H. T., Bordentown Military Institute, Bordentown, N. J.
Berle, C. H., c/o Innis, Speiden & Co., Niagara Fall, N. Y.
Berry, C. L. (Ret), 428 S. 2d St., Warrington, Fla.
Bethea, D. W., Jr., 228th AAA Group, Cp. Stewart, Ga.
Bibbs, E. S., 210 W. 55th St., New York 19, N. Y.
Biehl, P. F., PO Box 531, Savannah, Ga.
Blaney, George, Main St., Centerville, Mass.
Blunenfeld, Chas. H., Hq., 5th AAA AW Bn-M, Ft. Sheridan, Ill.
Bogart, F. A., 5112 Columbia Pike, Apt. 4, Arlington, Va.
Bottoms, Maitland, 6340 Woodline Ave., Philadelphia 31, Pa.
Bowen, W. S. (Ret), 2022 Columbia Rd., N.W., Washington, D. C.
Bowering, Benjamin, 401 Border St., Hot Springs, Ark.
Bowers, A. T., Hq., Second Army, Ft. Geo. G. Meade, Md.
Boyd, H. R., 22d AAA Gp., Ft. Custer, Mich.
Boyer, C. M., 3518 S. Utah, Arlington, Va.
Brackman, Roy, 430 Spring, Webster Groves 19, Mo.
Brady, W. I., c/o Mrs. Brady, 1000 W. 64th Terrace, Kansas City 5, Mo.
Braly, W. C. (Ret), 16 Sanborn Rd., Orinda, Calif.
Brandon, David R., 6 Adams St., Port Washington, N. Y.

Bray, W. P., 674 Reef Rd., Fairfield, Conn.
Brucker, W. H., Log. Div., GSUSA, Pentagon, Washington 25, D. C.
Brusher, H. A., Hq., SBAS, Ft. Scott, Calif.
Bucher, Oliver B., VMI, Lexington, Va.
Bukey, N. J., 6191 Rogers Park Pl., Cincinnati 13, Ohio.
Bullene, L. R., 26 Clairidge Court, Montclair, N. J.
Burnell, N. A., II, American Embassy, The Hague, Netherlands.
Burnett, J. R., 407 E. Cambridge St., College Park, Ga.
Burnham, C. V. H., 2925 Russell St., Berkeley 5, Calif.
Byers, L. W., Hq., AFF, Ft. Monroe, Va.
Campbell, A. H., 989 Lombard St., San Francisco 11, Calif.
Campbell, R. J., 105 Woodside Rd., Pittsburgh 21, Pa.
Caulk, J. D., Jr., 10 S. Stuyvesant Dr., Wilmington, Del.
Carey, Geo. R., Box 105, TAS, Ft. Bliss, Tex.
Carroll, J. B., 68th AAA Gp., APO 942, c/o PM, San Francisco, Calif.
Carswell, R. M., PO Box 606, Eustis, Fla.
Carter, M. S., 138th AAA Gp., APO 994, c/o PM, San Francisco, Calif.
Cary, Milo (Ret), Mobjack, Va.
Case, Homer, 2301 Connecticut Ave., N.W., Washington 7, D. C.
Cauthen, Wm. A., PO Box 429, Washington, Ga.
Catlett, J. T., 5 Pleasant St., Ashburnham, Mass.
Chamberlain, F. R., Jr., Charlottesville, Va.
Chamberlain, L. C., 720 Devon Court, San Diego 8, Calif.
Chandler, H. L., 14 Kensington Rd., Concord, N. H.
Chaplin, R. T., 3045 S. Abingdon St., Arlington, Va.
Chappelle, Vergne, 7-13 Washington Square, North, New York, N. Y.
Chester, G. A., 11 W. Woodbine St., Chevy Chase, Md.
Christian, F. L., 89th St., Virginia Beach, Va.
Christie, W. E., 23 E. Verano, Rt. 2, Orinda, Calif.
Clarke, G. L., 146 Alta Ave., Yonkers 3, N. Y.
Cleek, G. W., 1813 N. Quesada St., Arlington, Va.
Clement, A. W., 150 Canoe Brook Parkway, Summit, N. J.
Cibula, A. M., PO Box 699, Reading, Calif.
Cocheu, G. W. (Ret), 3106 Foxhall Rd., N.W., Washington, D. C.
Cook, H. W., Avondale Farm, Rt. 2, Elkton, Md.
Cook, J. W., 725 Grizzly Peak Rd., Berkeley 8, Calif.
Connor, Robert T., 80th AAA Group, Ft. Devens, Mass.
Corbin, Frank, 210 N. Edgewood St., Arlington, Va.
Cordiner, D. C. (Ret), U.S. Soldiers Home, Washington, D. C.
Corkan, L. A., 34th AAA Brig., Ft. Wadsworth, N. Y.
Cotter, C. E., 631-3 McClellan Ave., Ft. Leavenworth, Kan.
Cowen, E. G., Pers. Cen., Ft. Hamilton, N. Y.
Cox, A. B., 1310 Columbus Ave., Burlingame, Calif.
Craig, David M., Pacific Sector Engrs., Ft. Clayton, Canal Zone.
Craig, J. L. (Ret), 315 22d St., W., Bradenton, Fla.
Crawford, H. F., Jr., 122 Fairview Rd., Springfield, Pa.
Crews, L. R., 860-D W, 29th Pl., San Pedro, Calif.
Cron, L. N., 217 Sheridan Rd., Ft. Bliss, Tex.
Crowell, E. R., 4603 Walter Way, El Paso, Tex.
Cummings, L. E., NG, 638 Kettner Blvd., San Diego, Calif.
Daly, R. D., 5811 Walton Rd., Bethesda 14, Md.
Dance, C. A., 1701 Fairfield Ave., Shreveport, La.
Daneker, J. L., Cas. Pers. Cen., APO 503, c/o PM, San Francisco, Calif.
Davis, J. W., 210 Pope Ave., Ft. Leavenworth, Kan.
Davis, Lee J., 315-4 Pope, Ft. Leavenworth, Kan.
Dawson, C. A. W., 1369 Hyde St., San Francisco 9, Calif.
Dayharsh, T. J., 6152 12th St., N., Arlington, Va.
De Graw, K. E., PO Box 793, South Miami, Fla.
Denner, W. L., Clarks Summit, Pa.
Dennis, L. C. (Ret), 720 20th St., W., Bradenton, Fla.
Denson, L. A., 412-A Westchester Apts., Washington 16, D. C.
Denson, P. B., Hq., 35th AAA Brigade, Ft. Meade, Md.
Detwiler, H. P., 741 Jewell Ave., Pacific Grove, Calif.
Dingley, Nelson, III, U.S. Embassy, Stockholm, Sweden.
Dinsmore, J. P., 3112 N St., N.W., Washington 7, D. C.
Dodge, F. B., Jr., 15th & Dodge St., Omaha, Neb.
Dodge, J. H., Jr., 754 Titus Ave., Rochester 17, N. Y.
Donigan, R. L., 328 Wesley Ave., Evanston, Ill.
Donnelly, P. E., Cranston Street Armory, Providence, R. I.
Dowling, R. J., 6376 Brookside Ave., Oakland, Calif.
Duff, C. B., 200 Raymond St., Chevy Chase, Md.
Dunham, W. H., Jr. (Ret), Charlottesville, Va.
Dunn, G. W., Jr., 726 King St., Wilmington, Del.
Dunwoody, W. K., 2246 S. 16th Ave., Maywood, Ill.
Dutton, D. L., 192 S. College Ave., Newark, Del.
Duval, H. H. (Ret), 1501 Mt. Eagle Pl., Alexandria, Va.
Edgecomb, F. E. (Ret), Quaker Hill, Conn.
Elder, Bowman, 622 Chamber Commerce Bldg., Indianapolis, Ind.
Elliott, W. W., 700 Alice Drive, Northbrook, Ill.
Ellis, H. J., Statesboro, Ga.
Ellis, Walter F., Hq., 31st AAA Brigade, Ft. Lewis, Wash.
Englehart, E. C., 39 Hillcrest, Mill Valley, Calif.
England, J. M., Adm-Liaison Office, HICOG, APO 742, c/o PM, New York, N. Y.
Erwin, J. F., 2009 N.E. 79th Ave., Portland 13, Ore.
Ericson, Richard, FEC, APO 500, c/o PM, San Francisco, Calif.
Fagan, F. K., BOQ, Bolling AFB, Washington 25, D. C.
Featherston, J. H. (Ret), 747 Park St., Charlottesville, Va.
Fisken, A. D., Far Eastern Inst., Univ. of Washington, Seattle 5, Wash.
Flagg, K. P., 470 Capitol Ave., Hartford, Conn.
Folk, F. T., 326-3 Doniphan Ave., Ft. Leavenworth, Kan.
Foote, W. C., 3408 Lowell St., N.W., Washington 16, D. C.
Ford, C. R., 323 Pearl St., Moorestown, N. J.
Forman, O. T., 1st GM Regiment, Ft. Bliss, Tex.
Francis, L. L., 138 E. 68th Way, Long Beach 5, Calif.
Franklin, A. G., Jr., G-1 Div., Pentagon, Washington 25, D. C.
French, P. N., 3681 Upton St., N.W., Washington, D. C.
Gage, W. L., 1610 East 4th St., Tucson, Ariz.
Gallagher, F. F., 935 26th St., S., Arlington, Va.
Garber, F. H., 5102 Northampton St., Richmond, Va.
Gard, H. P., Qtrs. 02, Ft. Meade, Md.
Gettys, C. W., Bremerhaven POE, APO 69, c/o PM, New York, N. Y.
Gibbs, G. G., State Armory, West Hartford, Conn.
Goff, J. L., Ft. Lawton, Seattle, Wash.
Goodman, S. J., Box 661, Ft. Clayton, Canal Zone.
Gough, A. D., 4418 "Q" St., N.W., Washington 7, D. C.
Grinder, R. H., Hq., Japan Log. Comd., APO 343, c/o PM, San Francisco, Calif.
Gross, M. A., 3528 Beechwood Blvd., Pittsburgh 17, Pa.
Guhl, Robert C., Alanton, London Bridge, Va.
Haakenson, N. T., Box 221, Ft. Bliss, Tex.
Hallock, R. F., 206 E. Poplar St., San Antonio 2, Tex.
Hamilton, W. L., 459 Antlers Drive, Rochester 7, N. Y.
Handwerk, M. C., Hq., 40th AAA Brigade, APO 713, c/o PM, San Francisco, Calif.
Harris, Charles S., 4514 Connecticut Ave., N.W., Washington 8, D. C.
Harriman, J. E., ROTC Mississippi State College, State College, Miss.
Harry, John, TUSAF, APO 206, c/o PM, New York, N. Y.
Hartman, A. R., 808 Grand View Drive, Alexandria, Va.
Hartman, N. E., Mil. Dept., Fordham University, New York 58, N. Y.
Hastings, F. H. (Ret), Rt. 5, Box 121, Lakeland, Fla.
Hatch, M. A., PMS&T, Univ. of Illinois, Champaign, Ill.
Hause, F. A., University, Newark, Del.
Havighorst, R. K., Box 1564, Rt. 4, Miami 43, Fla.
Haw, J. C., 7755 Dep. Sch. Det., APO 403, c/o PM, New York, N. Y.
Hawthorne, H. B., Hq., Sixth Army, Presidio of San Francisco, Calif.
Hayden, J. L., 29 Eucalyptus Rd., Berkeley 5, Calif.
Haynes, W. E., 92 Rockingham St., Concord, N. H.
Hearn, G. J., Box 206, Monroe, Ga.
Heathcote, E. W., AA & GM Cen., Ft. Bliss, Tex.
Heilfron, Milton, State Bldg., Reno, Nev.
Heinlen, H. C., 894 43d St., Los Alamos, N. M.
Henderson, Richard, 869 Ridge St., Wethersfield, Conn.
Hendrix, R. R., Logistics Div., Pentagon, Washington 25, D. C.
Hennessy, H. P., 874 N. Jacksonville St., Arlington, Va.
Hennig, W. H., 10th AAA Gp., APO 660, c/o PM, San Francisco, Calif.
Herwitt, H. H., 8220 Michener Ave., Philadelphia 19, Pa.
Hewett, Hobart, USARPAC, APO 958, c/o PM, San Francisco, Calif.
Hibbert, G. W., 2126 Scottwood Ave., Toledo 2, Ohio.
Hickey, D. W., Jr., c/o American Embassy, Karachi, Pakistan.
Higgins, C. W., ROTC, University of Cincinnati, Cincinnati, Ohio.
Hill, R. E. (Ret), Palma Sola Park, Bradenton, Fla.
Hillberg, Lauri J., USMA, West Point, N. Y.
Hincke, J. I., Mil. Dept., University of Pittsburgh, Pittsburgh 13, Pa.
Hines, V. G., 606 Olympic Blvd., Everett, Wash.
Hodkins, H. W., 358 Winnetka Ave., Winnetka, Ill.
Hoehle, A. F., 614 Rock Springs Rd., Pittsburgh 34, Pa.
Hoge, Dan, Blacksburg, Va.
Holcomb, C. W., 1443 18th Ave., San Francisco 22, Calif.
Holden, B. M., Jr., 750 Main St., Hartford, Conn.
Holder, Wm. G., Mississippi State College, State College, Miss.
Holt, Roger H., Qtrs. 94-B, Ft. Sheridan, Ill.
Hopkins, Armand, PMS&T, Univ. of Delaware, Newark, Del.
Hopkins, R. H., 86 Pine Lane, Falmouth, Mass.
Howard, Chas. E., 135 E. Washington Blvd., Lombard, Ill.
Howell, J. F., 3222 Oliver St., N.W., Washington, D. C.
Hunt, Paul M., Walter Reed Gen'l Hospital, Ward 9-A, Washington 25, D. C.
Hunter, H. W., Staunton Military Academy, Staunton, Va.
Immer, W. L., 407 E. Bodley, Kirkwood 22, Mo.
Irvine, M. M., Army War College, Ft. Leavenworth, Kan.
Isaachsen, Edward, 2222 N. 77th Court, Elmwood Park, Ill.
Jaccard, P. A., Hq., Fourth Army, Ft. Sam Houston, Tex.
Jackson, H. R., 7 Stetson St., Lexington, Mass.
Johnson, H. A., 2349 Carquinez Ave., El Cerrito, Calif.
Johnson, H. R., 1188 Park Ave., Plainfield 6, N. J.
Johnson, H. S., 4188 Bennett Valley Rd., Santa Rosa, Calif.

Johnson, J. G., 218 Lumpkin St., Thomson, Ga.
Johnson, W. L. (Ret), 2511 S.W. 24th Court, Miami 33, Fla.
Jones, A. W., 56 West St., Portland, Maine.
Jones, Clifford (Ret), Norcross, Ga.
Jones, R. T., 75 Melbourne, Youngstown 7, Ohio.
Jordan, John R., Ivie Rd., Cape Elizabeth, Maine.
Joseph, Henry B., 55 Buckingham Way, Apt. 302, San Francisco, Calif.
Kane, F. B., Hq., AFF, Ft. Monroe, Va.
Kauffman, Roy K., GHQ, FEC, APO 500, c/o PM, San Francisco, Calif.
Keller, G. E. (Ret), 2714 31st St., S.E., Washington, D. C.
Keller, James S., I.G.D., GSUSA, Rm. 3C-338, Pentagon, Washington 25, D. C.
Kelly, P. K., 5917 N. Broadway, Chicago 40, Ill.
Kemble, Franklin (Ret), 219 S. High St., Selinsgrove, Pa.
Kendall, Wm. H., Army Exch. Service, 25 W. 43d St., New York 18, N. Y.
Kimball, D. G., 505 Hilltop Drive, Stratford, Conn.
Kimmel, M. M., 3637 Chesapeake Ave., Hampton, Va.
Kochevar, J. H., Hq., AFF, Ft. Monroe, Va.
Kreinheder, W. R., Commanche Ranch, Boerne, Texas.
Kress, C. G., Forest Hills, East Rochester, N. Y.
Kreuter, R. H., Ft. Monroe, Va.
Krueger, R. H., AA & GM Br., TAS, Ft. Bliss, Tex.
Kyster, O. H., Jr., 3527 Valley Dr., Alexandria, Va.
Lafrenz, W. F., 1386 Hillside Circle, Burlingame, Calif.
Lane, V. A., One Madison Ave., New York 10, N. Y.
Lanza, C. H., 1911 Elm St., Manchester, N. H.
Lapeyri, F. J., 771 20th Ave., San Francisco 21, Calif.
Lavery, A. L., Rm. 219, PO Bldg., Manchester, N. H.
Lazar, A. M., 3704 Manor Rd., Chevy Chase, Md.
Lazarus, F. L., 510 Madison Ave., New York 22, N. Y.
Leary, Thos. H., 148 N. Arlington Ave., East Orange, N. J.
Lepping, A. J., 3112 Savannah St., El Paso, Tex.
Linot, John H., 3542 Beachwood Pl., Riverside, Calif.
Lewis, Parry (Ret), 260 Little Farms Ave., Hampton, Va.
Liwski, Francis A., CA Br., P&A Div., Pentagon, Washington 25, D. C.
Long, Anthony, 4106 5th Ave., San Diego, Calif.
Longanecker, C. R., G-3, Sec., Hq., 4th Army, Ft. Houston, Tex.
Loupret, G. J., 18 Irvington St., Boston, Mass.
Lowe, P. S., Water Div., NYPE, Army Base, Brooklyn, N. Y.
Lucas, W. F., 1426 President St., Brooklyn 13, N. Y.
Luce, Dean, 1107 W. Jackson St., Olympia, Wash.
Lunn, W. V., 233 Forest St., Shreveport, La.
McBride, W. E., Ruston, La.
McCarthy, E. B., Ft. Devens, Mass.
McCroskey, S. L., Hq., AFF, Ft. Monroe, Va.
McFadden, W. C., PMS&T, Utah State Agr. College, Logan, Utah.
McFeely, H. G., Army War College, Ft. Leavenworth, Kan.
McGarraugh, R. E., GHQ, FEC, APO 500, c/o PM, San Francisco, Calif.
McGeehan, C. W., 1700 Ramblewood Rd., Baltimore, Md.
McLean, Donald, Hq., South Post, Ft. Myer, Va.
McManus, C. F., Riverside Drive, Elsinore, Calif.
McWilliams, W. A., 43 E. Division St., Dover, Del.
Mabbott, Harold C. (Ret), 417 Harvard Ave., Swarthmore, Pa.
MacDonald, D. E., 6024 Benjamin, New Orleans, La.
Mackin, R. N., Newton, Conn.
Madison, J. H., The Citadel, Charleston, S. C.
Mann, LeRoy S., 260th AAA Group, Cp. Edwards, Mass.
Maris, W. R., 815 Boulevard, Westfield, N. J.
Markle, H. A., Jr., 2026 Walbert Ave., Allentown, Pa.
Martin, D. D., GHQ, FEC, APO 500, c/o PM, San Francisco, Calif.
Martin, E. G., 724 Ballywood Rd., Irving, Tex.
Martin, Robt. J., G-3, Hq., 1st Army, Governors Island, New York 4, N. Y.
Massello, Wm., Jr., 326-7 Doniphan Ave., Ft. Leavenworth, Kan.
Maxfield, C. L., 166 Bolton St., Portland 4, Maine.
Mayer, J. S., 808 Richmond Rd., Staten Island, N. Y.
Maynard, H. H., 925 N. Orlando Ave., Winter Park, Fla.
Mazeau, Camille, 8 Ettador Park, Milford, Conn.
Means, D. E., Dept. Ext. Courses, Ft. Sill, Okla.
Mendenhall, C. M., Jr., N. Walnut St., La Habra, Calif.
Mercandino, J. F., 25-39 31st St., Astoria, N. Y.
Merkle, E. A., PMS&T, Fordham Univ., New York, N. Y.
Merritt, W. B., Box 138, Blacksburg, Va.
Meyer, C. B. (Ret), 2818 1st Ave., W., Bradenton, Fla.
Meyers, F. X., 2915 Sherwin Ave., Chicago, Ill.
Meyers, H. F., 2025 Belmont Rd., N.W., Washington, D. C.
Meyers, M. D., 3422 Warden Drive, Philadelphia 29, Pa.
Millis, E. L., 575 Vinewood Ave., Birmingham, Mich.
Miller, Edwin, 575 Johnson Ave., Brooklyn, N. Y.
Miller, R. L., 4453 Volta Pl., N.W., Washington 7, D. C.
Mitchell, J. D., 7810 SCU, APO 139, c/o PM, New York, N. Y.
Mitchell, L. C., OMA, Damascus, Syria.
Miter, F. F., OMA, Lisbon, Portugal.
Moore, J. A., 120 W. 62d St., New York 23, N. Y.
Morrison, D. E. Wildwood, Ga.
Moss, Joe D., 4309 Van Ness St., N.W., Washington, D. C.
Mott, F. E., 211 Rockingstone Ave., Larchmont, N. Y.
Mountford, F. A., 906 26th Pl., S., Arlington, Va.
Mozley, J. M., 63 Hanley Downs, Richmond Hts. 17, Mo.
Mullaney, T. F., 3100 Sheridan Rd., Chicago, Ill.
Muller, J. A., PO Box 1491, New Orleans, La.
Mundt, G. H., 526 S.E. 14th St., Portland 14, Ore.
Munford, T. W., c/o American Embassy, Jakkarta, Indonesia.
Murphy, J. G., 051 Butler Ave., Ft. Meade, Md.
Murphy, R. F., 52 Lord Kitchener Rd., New Rochelle, N. Y.
Musselman, A. C., 91 Cornwell Ave., Valley Stream, L. I., N. Y.
Myers, Harry (Ret), 2045 38th St., S.E., Washington, D. C.
Nelson, O. A., RFD 3, Concord, N. H.
Nelson, P. B., AA & GM Cen, Ft. Bliss, Tex.
Nesmith, James, II, 107 10th St., Garden City, N. Y.
Nichols, G. F., 27 Lester St., New London, Conn.
Nickerson, C. R., 411 Littleback River Rd., Hampton, Va.
Norris, Don R., 211 17th St., Santa Monica, Calif.
O'Connor, Daniel A., Armed Forces Staff College, Norfolk 11, Va.
Olson, G. P., 110 1st St., S.E., St. Cloud, Minn.
Ogden, M. L., Mil. Security Bd., APO 742, c/o PM, New York, N. Y.
Ostenberg, F. T., 412 Argyle Drive, Alexandria, Va.
Ostrom, C. D. Y., 3024 Clay St., San Francisco 15, Calif.
Palmer, G. W., Ft. Totten, N. Y.
Pamplin, D. G., 1006 W. Lake St., Minneapolis, Minn.
Pape, Robin B., Qtrs. 409, Ft. Bliss, Tex.
Parmelee, A. L., Ft. Wadsworth, Staten Island, N. Y.
Passarella, P. F., G-3, Hq., 2d Army, Ft. Meade, Md.
Patterson, C. G., 552 Argyle Drive, Falls Church, Va.
Papenfoth, W. H., 855 N. Kensington St., Arlington, Va.
Peay, J. H. B., Jr., 3202 Edgewood Ave., Richmond, Va.
Peca, Peter S., 718 Timber Branch Rd., Alexandria, Va.
Peddicord, E. D., Qtrs. No. 7, Aberdeen Prvg. Grd., Md.
Perry, W. A., APO 942, c/o PM, Seattle, Wash.
Phillips, W. S., University of New Hampshire, Durham, N. H.
Pongrace, O. W., 597 Neff Rd., Grosse Pointe 30, Mich.
Price, F. A., 610 S. 9th St., Fort Pierce, Fla.
Pulham, C. T., 515 N. Northwest Highway, Park Ridge, Ill.
Putnam, W. F. (Ret), 621 Alcazar Ave., Coral Gales 34, Fla.
Radnor, J. C., Federal Trade Commission, Washington 25, D. C.
Rasmussen, K. E., U.S. Embassy, Oslo, Norway.
Rawls, W. O., 1805 37th St., N.W., Washington, D. C.
Recer, B. W., 1672 Dayton St., Wichita Falls, Tex.
Reuter, H. C., Ft. Monroe, Va.
Ritchie, I. H., APO 500, c/o PM, San Francisco. Calif.
Rose, G. E., 712 Harter St., Winfield, Kan.
Rothgeb, C. E., OMGT, APO 719, c/o PM, San Francisco, Calif.
Roy, Paul A., 322-4 Doniphan Ave., Ft. Leavenworth, Kan.
Russell, R. W., AA&GM Br., TAS, Ft. Bliss, Tex.
Russell, Sam C., c/o JAMAG, Navy 100, FPO, New York, N. Y.
Samuels, Andrew, Jr., 3717 Woodley Rd., N.W., Washington, D. C.
Sawyer, J. A., JAMAG, US Navy 100, c/o FPO, New York, N. Y.
Schabacker, C. H., University of Minnesota, Minneapolis, Minn.
Schmick, Peter, Army War College, Ft. Leavenworth, Kan.
Schulz, G. J., Hartly, Del.
Schweizer, W. C., 7 Lloyden Drive, Atherton, Calif.
Schwendemann, E. T., 4001 Grand Blvd., East Chicago, Ind.
Sellards, D. F., Jr., 4434 Moorpark Way, North Hollywood, Calif.
Sells, W. A., 5252 Aldama St., Los Angeles, Calif.
Seltzer, J. W., Jr., 828 Kenwick Rd., Columbus, 9. Ohio.
Seward, J. R., USARPAC, APO 958, c/o PM, San Francisco, Calif.
Shaver, M. P., 420 Grand Ave., Ft. Leavenworth, Kan.
Shaw, L. E., c/o American Embassy, Caracas, Venezuela.
Shelton, C. Q., AA & GM Br., TAS, Ft. Bliss, Tex.
Shepherd, C. E., AFF Bd. No. 4, Ft. Bliss, Tex.
Sherman, E. W., 127 W. 83d St. New York 24, N. Y.
Shumate, J. P., PO Bldg., Manchester, N. H.
Shunk, P. W., Box 117, TAS, Ft. Bliss, Tex.
Shutt, Logan O., Fallston, Md.
Sides, John D., Hq., 226th AAA Gp., Ft. Bliss, Tex.
Simmons, J. F. (Ret), 115 Pochin Pl., Hampton, Va.
Smith, D. H., Hq., MARBO, APO 246, c/o PM, San Francisco, Calif.
Smith, J. C., 1122 E. Louisiana, Norman, Okla.
Smith, P. McC., USMA, West Point, N. Y.
Snodgrass, John T., Orgn. & Trng. Div., Pentagon, Washington 25, D. C.
Sohn, M. G., 1156 McClellan St., Los Angeles, Calif.
Spangler, R. S., c/o Army Sec., MAAG, APO 205, c/o PM, San Francisco, Calif.
Sponsler, J. B., 65 Prospect St., Huntington L. I., N. Y.
Squire, John W., Box 30, Danville, Va.
Stark, H. W., 3620 Rubicoux Dr., Riverside, Calif.
Stayton, Tom V., Hq., FEC, APO 500, c/o PM, San Francisco, Calif.
Staub, L. J., 17 Webster Rd., Orono, Maine.

Steele, John C., Plans Div., Hq., USARPAC, APO 958, c/o PM, San Francisco, Calif.
Steele, Preston, Ofc., Chief, AFF, Ft. Monroe, Va.
Stevens, Vernum C., Hq., AFF, Ft. Monroe, Va.
Stillman, G. T., The Caldwell, Troy, N. Y.
Stockwell, F. E., 40 Elmwood Rd., New Haven, Conn.
Stoebe, R. W., 4949 N. 33d Rd., Arlington, Va.
Stone, Raymond, 41-B Ingalls Rd., Ft. Monroe, Va.
Stopford, F. W. (Ret), Palma Sola Park, Bradenton, Fla.
Strong, J. E., 285 Paseo Colon, Buenos Aires, Argentina.
Stuart, LaR. L., University of San Francisco, San Francisco 17, Calif.
Stubbs, G. H., 406 Dickman Rd., Ft. Sam Houston, Tex.
Supple, E. L., PO Box 495, Albuquerque, N. M.
Sweeney, F. C., 335 W. Passaic Ave., Bloomfield, N. J.
Swett, F. S., 62 Alden St., East Natick, Mass.
Symons, Arthur, 2621 N. Quantico St., Arlington, Va.
Tarrant, L. K., APO 942, c/o PM, Seattle, Wash.
Tasker, H. P., 53 Laurel Ave., Cornwall, N. Y.
Thomas-Stahle, Charles, Centre Furnace, State College, Pa.
Thompson, E. B., Qtrs. 530, Ft. Bliss, Tex.
Thompson, M. R., American Embassy, APO 58, c/o PM, New York, N. Y.
Thomson, E. W., 151 Monticello Ave., Annapolis, Md.
Tilton, Kenneth E., USMA, West Point, N. Y.
Timberlake, E. W. (Ret), Utah State Agr. College, Logan, Utah.
Toenes, Henry K., Route 6, Box 380, Mobile, Ala.
Totten, James (Ret), 1661 Crescent Pl., N.W., Washington, D. C.
Tracy, Maxwell W. (Ret), Lexington, Va.
Tredennick, D. C., 3619 Alton Pl., N.W., Washington 8, D. C.
Turnbull, H. T. (Ret), 2824 S. Columbus St., Arlington, Va.
Vandersluis, H. C., Qtrs. No. 4-A, Ft. Hamilton, N. Y.
Vestal, S. C., 554 E. Howard St., Pasadena 6, Calif.
Vickers, L. T., M.A.A.G., APO 794, c/o PM, New York, N. Y.
Villaret, Eugene, 3230 Holland Pl., Washington, D. C.
Vlack, J. B., 10330 S. Wood, Chicago 43, Ill.
Von Daacke, F. J., 5501 Eastland, Detroit 13, Mich.
Walker, E. B., 107 W. Underwood St., Chevy Chase, Md.
Wall, P. L., Duval County Armory, Jackson, Fla.
Wallace, Everett C., 145 Culver Rd., Rochester 20, N. Y.
Wangeman, A. J., 1515 Spencer St., Lansing, Mich.
Waters, T. L., 766 Stevens Ave., Portland, Maine.
Watson, H. J. (Ret), 1831 Stanwood Rd., East Cleveland, Ohio.
Watson, P. D., PO Box 584, Newport, R. I.
Watt, Raymond, 3151 Main St., Stratford, Conn.
Weber, Milan G., c/o Uscuela Ant., Mar del Plaza, Argentina.
Weddell, W. A., PO Box 272, Dillon, S. C.
Welch, J. M., 1055 Montague Rd., Park Hills, Ky.
West, M. H., 3860 Atascadero Drive, San Diego 7, Calif.
Wilkinson, J. B., 455 Caroline, Houston 2, Tex.
Willard, R. W., Box 471, Mankato, Minn.
Wilmer, R. H., 2600 31st St., N.W., Washington, D. C.
Wilson, A. E., State Armory, West Hartford, Conn.
Wilson, A. M., Jr., USAF Antilles, APO 851, c/o PM, Miami, Fla.
Winton, Arthur, Westchester Apts., 39 Cathedral Ave., N.W., Washington, D. C.
Wirth, A.J., Box 222, Norwich, Conn.
Wood, F. O., 710 E. Central Ave., Albuquerque, N. M.
Wood, Robert J., Ft. L. J. McNair, Washington 25, D. C.
Woods, F. T., Bridge Rd., Ross, Calif.
Wrean, Joy T., Hq., 97th AAA Gp., APO 331, c/o PM, San Francisco, Calif.
Wrenn, O. I., 409 Scott Ave., Greensboro, N. C.
Wright, A. G., 950 Lombard St., San Francisco 11, Calif.
Wyman, B. E., 2861 N. Beachwood Drive, Hollywood 28, Calif.
Young, Alexander, 2538 11th Ave., W., Seattle, Washington.
Young, C. G., Post Hq. Bldg., Cp. Roberts, Calif.
Young, Ellsworth, 7322 Highland Ave., Kansas City 5, Mo.
Young, John P., Renwick Drive, Ithaca, N. Y.
Zartarian, S. M., 66 Richfield Rd., Arlington, Mass.

LIEUTENANT COLONELS

Aatman, J. R., 1054 St. Joseph St., Lancaster, Pa.
Ackert, Thos. W., 78th AAA Gun Bn., APO 59, c/o PM, San Francisco, Calif.
Adam, James, Jr., 34 Garrison Rd., Wellesley 81, Mass.
Adams, Arthur A., Hq., 12th AAA Group, Ft. Bliss, Tex.
Adams, L. W., 7177 AMG Det., APO 209, c/o PM, New York, N. Y.
Adamson, Weir, c/o International Nickel, 67 Wall St., New York, N. Y.
Adler, J. M., 1822 W. Morse Ave., Chicago, Ill.
Albergotti, J. S., Box 669, Lancaster, S. C.
Alexander, W. V., Jr., 22 Revere Dr., Apt. 3-E, Stamford, Conn.
Alfrey, John, 64th AAA Gun Bn., APO 713, c/o PM, San Francisco, Calif.
Ames, Geo. W., 20385 Prospect Rd., Cupertino, Calif.
Anderson, C. A., 502d AAA Gun Bn., Ft. Bliss, Tex.
Anderson, C. E., 21045 Roscoe Blvd., Canoga Park, Calif.
Anderson, Chas. A., 1606 Textile Tower, Seattle, Wash.
Andrews, Chas. L., Hq. Btry, 76th AAA AW Bn.-SP, APO 323, c/o PM, San Francisco, Calif.
Anson, P. A., Box 37, AA & GM Br., TAS, Ft. Bliss, Tex.
Ashworth, Edw. T., 716 N. Edgewood St., Arlington, Va.
Atwood, G. Lloyd, Army Language School, Presidio of Monterey, Calif.
Baker, J. L., 2024 E. Florida St., Long Beach, Calif.
Baldry, Geo. A., 530-3 Kearney Ave., Ft. Leavenworth, Kan.
Ballagh, R. S., 138 Coronado Dr., El Paso, Tex.
Ballentine, J. F., 14 Berkeley Pl., Montclair, N. J.
Baltzer, N. W., Qtrs. 2694-G, Mapes Rd., Ft. Meade, Md.
Bane, John C., 8 Central Ave., Morris Plains, N. J.
Barfield, T. H., G-3, GHQ, FEC, APO 500, c/o PM, San Francisco, Calif.
Barnes, Richard W., 3120 S.W. 25th St., Miami 33, Fla.
Barrett, A. B., 97th AAA Group, APO 331, c/o PM, San Francisco, Calif.
Barry, Robt. B., Jr., 410-5 Kearney, Ft. Leavenworth, Kan.
Barton, C. T., Qtrs. 2692-E, Ft. Meade, Md.
Beckman, Chas., 1610 Mahan Ave., New York 61, N. Y.
Beebe, Curtiss L., 3726 N. Albina Ave., Portland 12, Ore.
Bell, Daniel G., 9714 Rockbrook, Dallas 9, Tex.
Bellamy, Paul E., Hq., 5th Army, Chicago, Ill.
Berg, F. T., 1743 Pickett Ave., Baton Rouge, La.
Berry, Edw., Box 12, McNair Hall, Ft. Sill, Okla.
Best, Geo. H., 526th AAA Gun Bn., Ft. Bliss, Tex.
Bieber, C. V., 1 Fordham Pl., Hempstead, L. I., N. Y.
Biggar, James, 12, Hawthorne St., Cambridge, Mass.
Birch, W. H., Box 222, Herndon, Va.
Blethen, John A., *The Seattle Times*, Seattle, Wash.
Bolton, H. A., 306 S. 5th St., Griffin, Ga.
Borum, V. L., 431 E. 20th, Apt. 10-F, Peter Cooper Village, New York 10, N. Y.
Bowman, Jas. W., 607 Williams Ave., Natchitoches, La.
Boyce, W. C., Jr., Bldg. 154, TAS, Ft. Bliss, Tex.
Boys, R. C., USMA, West Point, N. Y.
Bradley, F. X., 088 Highview Ave., Orangeburg, N. Y.
Bradshaw, Leon S., Box 1099, Salisbury, N. C.
Brady, D. J., 417 Lowell St., Reading, Mass.
Breite, W. W., 720 Sheldon Bldg., 461 Market St., San Francisco 5, Calif.
Brewerton, H. R., 522 W. Beechtree Lane, Wayne, Pa.
Britton, T. A., 2 Britton Lane, Montgomery 6, Ala.
Brown, Gerhard E., Stu. Det., C&GSC, Ft. Leavenworth, Kan.
Brown, R. L., 37 Hilton St., Noroton Hgts., Darien, Conn.
Brown, R. L., 609 S. Jefferson St., Roanoke 16, Va.
Brown, W. Z., 3933 Centenary Dr., Dallas 5, Tex.
Brownlee, L. H., RA Instr., N. M. NG, Box 158, Roswell, N. M.
Brownson, H. N., Hq., EUCOM, Ordn. Div., APO 403, c/o PM, New York, N. Y.
Burrows, John E., 1802 Euclid Avenue, Lawton, Okla.
Bush, E. L., 4th AAA AW Bn.-M, Ft. Meade, Md.
Butterfield, Kenneth C., 16261 Snowden Ave., Detroit 27, Mich.
Button, Ronald E., 8210 Custer Rd., Bethesda 14, Md.
Byers, Lawrence W., OCAFF, G-3 Sect., Ft. Monroe, Va.
Cacho, Miguel S., Calle-de-Camora 95, Apt. 5, Colonia Condesa, Mexico, D.F.
Camp, Sanders, 342 McDaniel St., Monroe, Ga.
Campbell, R. L., 6617 Lake Shore Dr., Minneapolis 19, Minn.
Carlen, J. J., 61 Stone St., Concord, N. H.
Carothers, Earl M., 3850 Greenbrier Rd., Long Beach, Calif.
Caterson, R. B., 740 N.E. 139th St., North Miami, Fla.
Cheal, Raymond C., Hq. & Hq. Btry., 68th AAA Gun Bn., Ft. Lewis, Wash.
Chirico, Carl F., Hq., Ft. Lesley J. McNair, Washington, D. C.
Clafee, Robt. A., Ft. Bliss, Tex.
Clements, Robt. H., 7506 S. East End Ave., Chicago 49, Ill.
Cleveland, Conrad P., Jr., c/o Piedmont National Bank, Spartanburg, S. C.
Clewe, T. S., 1805 N St., Apt. 6, Sacramento, Calif.
Cochran, M. D., 408 Madison Ave., Cottage Grove, Ore.
Coffman, Burness L., 825 N. Elm St., Nevada, Mo.
Cohen, R. S., Jr., 824 Milledge Rd., Augusta, Ga.
Coles, C. E., 2441 Arlington Ave., Davenport, Iowa.
Commons, W. C., Jr., 320 Church St., Apt. 12, Whitinsville, Mass.
Comolli, Joseph F., 251 South St., Concord, N. H.
Conell, J. C., 2959 S. Columbus St., Arlington, Va.
Congden, N. A. (Ret), 2037 19th Ave., W., Bradenton, Fla.
Conrad, J. E., Box 308, Roxboro, N. C.
Cook, J. E., Jr., Box 558, Rt. 1, Annandale, Va.
Cooper, A. J., Jr., G-4, GHQ, FEC, APO 500, c/o PM, San Francisco, Calif.
Cooper, H. B., Jr., NG Armory, Talladega, Ala.
Cooper, Robt. C., 1 Perry St., Bristol, R. I.
Corcoran, J. F., Jr., 277-C Reichfelt Ave., New Milford, N. J.
Cormier, E. L., 49 Forest Park, Portland, Maine.
Corum, D. R., SBAS-DSM, Ft. Scott, Calif.
Cox, Thos. R., 152 Seaside Ave., Stamford, Conn.
Creasy, Roy V., 58 Ash St., Park Forest, Chicago Heights, Ill.
Cressman, H. A., Box 142, RD No. 1, Kutztown, Pa.
Cummings, W. J., 5835 Avenida Commercial, La Jolla, Calif.

Cunningham, Joseph H., Bldg. 45, Jackson Bks., New Orleans, La.
Currie, A. A., Bell Telephone Labs, Whippany, N. J.
Daley, Paul W., 1310 Garfield Ave., Auroroa, Ill.
Danielson, D. C., 615 Denison, Manhattan, Kan.
Darrah, J. T., 106 Meadowbrook Terrace, Greensboro, N. C.
Davis, T. O., 417 N. Rogers, Olympia, Wash.
Dawson, Gordon M., 2921 Bancroft St., San Diego, Calif.
Day, Frederick E., Apt. 303 2212 Coston Dr., Silver Spring, Md.
Dean, L. B., Hq., 398th AAA AW Bn., Cp. Edwards, Mass.
De Frees, L. J., 205 N. Emerson St., Arlington, Va.
De Martino, U., Mil. Att.-Italian Embassy, 1601 Fuller St., N.W., Washington 9, D. C.
Dennis, K. R., 6011 Oberlin Ave., Seattle 5, Wash.
De Rita, Joseph, Box 553, AAA & GM Br., TAS, Ft. Bliss, Tex.
Derrer, L. H., 49th SSM-AAA Regt., RCA, Sault Ste. Marie, Ontario, Canada.
DiFusco, M. P., 42 Gentian Ave., Providence, R. I.
Dimmick, H. S., 341 Kathmere Rd., Havertown, Pa.
Dixon, G. A., 262 E. 2d St., S., Rexburg, Idaho.
Dodson, M. B., Chief, Propulsion Sect., AA & GM Br., TAS, Ft. Bliss, Tex.
Donelan, Thos. E., 219-16 139th Ave., Springfield Gardens, N. Y.
Donnelly, Paul I., 1831 Delaware Ave., Wilmington, Del.
Dougan, M. D., Qtrs. 47, Presidio of Monterey, Calif.
Dougan, R. C., Tactics Dept., A.D., The Inf. School, Ft. Benning, Ga.
Drew, B. J., Bldg. 1519, Apt. 1, Ft. McPherson, Ga.
DuBois, Jesse B., 762 Franklin St., Grenada, Miss.
Dueker, F. E., U. S. Mil. Mission, Iranian Gendarmarie, APO 616, c/o PM, New York, N. Y.
Duke, David H., Shell Oil Co., Box 1191, Tulsa, Okla.
Durschnitt, S., Hq., USARFANT & Mil. Dist. of Puerto Rico, APO 851, c/o PM, New York, N. Y.
Dyer, G. R., 361 6th St., N.W., Atlanta, Ga.
Ebel, Henry W., Hq., 79th AAA Gun Bn.-120mm, Ft. Custer, Mich.
Edwards, H. A., 2528 Homehurst Ave., Pittsburgh, Pa.
Eisenbrown, Joseph D., PO Box 936, Reading, Pa.
Ellert, L. J., Civ. Comp. Group, D.C.-SO, Hq., USAF, Washington 25, D. C.
Emmert, H. D., Jr., 5705 W. Burnham St., West Allis 14, Wis.
Eubank, Perry H., Stu. Det., G&GSC, Ft. Leavenworth, Kan.
Everett, P. L., GHQ, Antiaircraft Sect., APO 500, c/o PM, San Francisco, Calif.
Fambrough, James McI., 2026 Branard St., Houston 6, Tex.
Farnham, Geo. W., 31-8 Elk Court, Hempstead, L. I., N. Y.
Farnum, S. H., 24 Keith Ave., Brockton 28, Mass.
Farquar, M. T., 98 S. Hillside Ave., New Hartford, N. Y.
Farren, James H., 1775 Ridge Rd., North Haven, Conn.
Finkenaur, R. G., 3207 Idalia St., El Paso, Tex.
Fischer, C. W., 35-31 203d St., Bayside, N. Y.
Fisk, S. W., 4317 S. 35th St., Fairlington, Arlington, Va.
Foote, S. W., 322-3 Doniphan, Ft. Leavenworth, Kan.
Foster, R. J., Bishops Lodge, Santa Fe, N. M.
Fowles, L. O., Box 1043, Olympia, Wash.
Francis, Wm. H., 324-7 Doniphan Pl., Ft. Leavenworth, Kan.
Franklin, R. H., 13132 Winchester Rd., Huntington Woods, Mich.
Frohman, I. G., 91-01 Blvd., Rockaway Beach, N. Y.
Fuller, Arthur L., National War College, Washington 25, D. C.
Fultz, W. S., 507th AAA AW Bn., APO 201, Unit 1, c/o PM, San Francisco, Calif.
Gamble, A. S., SCU 7815, APO 178, c/o PM, New York, N. Y.
Gauen, G. R., 2130 22d St., Sacramento 17, Calif.
Gayles, James D., 415 Partridge St., Albany, N. Y.
Gearhiser, Wm. P., Box 650, Greenwood, Miss.
Gee, John R., Jr., La Plata, Md.
George, Max S., 1815 N. Highland St., Arlington 1, Va.
Giffin, Stewart S., Bainbridge, Ohio.
Gifford, J. R., T-5205, Ft. Bliss, Tex.
Gilbert, Chas. M., 48 Amherst Rd., Stoughton, Mass.
Glassen, Chester E., D5-Apt. 3, Syracuse Heights, Syracuse 10, N. Y.
Glines, V. L., Asst. G-1, AA & GM Cen, Ft. Bliss, Tex.
Grant, Fred S., Jr., Center St., Dover, Mass.
Green, John W., c/o Geophysics Service, Inc., 1416 Esperson Bldg., Houston, Tex.
Gregory, F. G., Jr., 70th AAA Gun Bn., Ft. Meade, Md.
Grevemberg, F. C., 5720 Louis the 14th St., New Orleans, La.
Griffin, James J., 4344 Central Ave., San Diego 5, Calif.
Haggerty, F. V. J., 2705 N. Broom St., Wilmington, Del.
Hain, Robt. W., 15th AAA AW Bn., Ft. Lewis, Wash.
Hamelin, R. W., 2482 ASU-ROTC, Valley Forge Military Academy, Wayne, Pa.
Hancammon, W. H., Jr., 8 Terrace Walk, Wilmington, N. C.
Hart, James A., 60 Rodney Pl., Rockville Centre, N. Y.
Haskell, Harold G., Armed Forces Staff College, Norfolk 11, Va.
Haskett, G. M., 501 Columbia St., Olympia, Wash.
Haynes, D. F., 209 Raymond St., Chevy Chase 15, Md.
Hays, G. M., Bloomfield, Ind.
Heaney, E. J., 36 Davis Ave., Dalhalla, N. Y
Hearn, J. V., Jr., RFD 3, Vienna, Va.
Heesch, Herman F., 101 Lincoln Blvd., Merrick, L. I., N. Y.
Hendrickson, Anselm, 12 Prescott, Nashua, N. H.
Henry, E. F., Jr., 7108 Buffalo Ave., Jacksonville 6, Fla.
Herrod, John T., APO 733, c/o PM, Seattle, Wash.
Hewitt, Harry, Hq., East. AAAC, Stewart AFB, Newburgh, N. Y.
Hiddleston, E. W., Hq. & Hq. Co., 7th Engrs. Brigade, Main Navy Bldg., Washington, D. C.
Hilbert, T. F., Jr., 330 First Ave., New York 9, N. Y.
Hoag, R. W., 4120 Xenwood Ave., Minneapolis 16, Minn.
Hodges, R. D., 4827 Montrose Ave., Ft. Wayne 5, Ind.
Hoffman, T. F., Det. R, Regensburg-Sub-Post, APO, 225, c/o PM, New York, N. Y.
Hoffmann, T. L., AFF Board No. 4, Ft. Bliss, Tex.
Holland, E. L., 112 Beacon St., Hartford 5, Conn.
Holt, N. B., Qtrs. 408, Ft. Bliss, Tex.
Hopper, D. A., 77 Grant Pl., Irvington 11, N. J.
Hotchkiss, A. G., 1571 Dean St., Schenectady, N. Y.
Howard, Chas. E., 135 E. Washington Blvd., Lombard, Ill.
Hubbard, Wm. H., Qtrs. 112-A-6, Governors Island, New York 4, N. Y.
Hudgins, S. F., 34th AAA Brigade, Ft. Bliss, Tex.
Hudiburg, H. B., Army Command, JLRPG, Cocoa, Fla.
Hufford, R. W., Warrenville, Ill.
Hutchinson, Geo. W., 4052d ASU, AA&GM Cen., Ft. Bliss, Tex.
Iverson, Noel A., 12060 Lake Ave., Lakewood 7, Ohio.
Jackson, Robt. H., Box 167, RD 1, Wexford, Pa.
Jacobson, Julius, 3801 Kensington Ave., Richmond, Va.
Jaeger, A. P., 2921 Briggs Ave., Bronx 58, N. Y.
Janowski, R. A., Qtrs. 172, West Point, N. Y.
Jefferson, D. K., 190 Hillside Ave., Mt. Vernon, N. Y.
Jeffries, J. C., Jr., Stu. Det. C&GSC, Ft. Leavenworth, Kan.
Jeter, Russell, Church St., Union, S. C.
Johnson, T. W., Wolcott, N. Y.
Johnson, W. B., Jr., 2513 Weaver Rd., S.W., Roanoke, Va.
Jones, Robt. J., 22d AAA AW Bn., APO 331, c/o PM, San Francisco, Calif.
Kallis, S. A., Hq., 4th Army, Ft. Sam Houston, Tex.
Kallman, M. M., Stu. Det., C&GSC, Ft. Leavenworth, Kan.
Kamenar, J. M., 436 Independence St., Fairport Harbor, Ohio.
Kaplan, M. E., 34 Bulkeley Ave., Hartford, Conn.
Keisler, D. S., PO Box 1, Newberry, S. C.
Kelley, S. R., 124 Babcock St., Brookline 46, Mass.
Kendall, J. W., c/o Bekins Van Lines, 1335 Figueroa St., Los Angeles 15, Calif.
Kenison, F. D., 47 Maple St., Littleton, N. H.
Kerr, Allen D., Hq., 96th AAA Gun Bn., Ft. Bliss, Tex.
Kessler, Robt. H., Box 24, AA & GM Br., TAS, Ft. Bliss, Tex.
Kimm, V. M., Box 25, AA & GM Br., TAS, Ft. Bliss, Tex.
Kinard, Wm. H., Jr., 311-1 Third St., Ft. Leavenworth, Kan.
Klink, W. W., 1000 Lomita Dr., Bakersfield, Calif.
Knape, David R., 14892 Wadkins Ave., Gardena, Calif.
Knapp, E. C., Qtrs. 7-12, Governors Island, New York 4, N. Y.
Kopscak, A. A., 11846 Cherry Ave., Inglewood, Calif.
Kopp, P. J., 1305 N. Adams St., Arlington, Va.
Koscielniak, A. A., G-3, Hq., 1st Army, Governors Island, New York 4, N. Y.
Kushner, G. L., 2121 Berkeley Ave., St. Paul 5, Minn.
Kuyper, Theo. H., 7154 Armitage Ave., Chicago 35, Ill.
Laird, Wm., Kopperston & Eastern Gas & Fuel Assts., Kopperston, W. Va.
Land, Jas. D., 1508 N. Brown Ave., El Paso, Tex.
Laney, Jas. R., Jr., Office, Chief, AFF, Ft. Monroe, Va.
Langford, C. A., 64th AAA Gun Bn., APO 994, c/o PM, San Francisco, Calif.
Lanterman, John V., OMA, c/o Intel. Div., GSUSA, Msg. Cen. Br., Pentagon, Washington 25, D. C.
Larson, W. L., Qtrs. 542, Ft. Bliss, Tex.
Laskowsky, R., Stu. Det. "C," C&GSC, Ft. Leavenworth, Kan.
Ledeboer, F. W. C., 6814 ASU, University of Washington, Seattle 5, Wash.
Lee, John K., Jr., Hq., 40th AAA Brigade, APO 503, c/o PM, San Francisco, Calif.
Lee, Smith, 1311 Michelle St., West Covina, Calif.
Leonard, Robt. J., 70 Beech St., Cuyahoga Falls, Ohio.
Leunig, A. H., 4214 Redwood Ave., Jacksonville, Fla.
Lewis, Donald L., 441 Dogwood St, Park Forest, Chicago Heights, Ill.
Libit, Edw., 2430 W. Jarvis, Chicago, Ill.
Lind, H. D., 217 Meade, Ft. Leavenworth, Kan.
Linderer, L. W., 376th Abn. FA Bn., 82d Abn. Div., Ft. Bragg, N. C.
Lipscomb, L., Jr., Hq., 6th Army, Presidio of San Francisco, Calif.
Littman, A., 76-47 Veigh Pl., Flushing, L. I., N. Y.
Logan, W. B., Log. Div., GSUSA, Pentagon, Washington 25, D. C.
Lombardi, Lucian, 20 Sachem St., Devon, Conn.
Long, John V., Hq., 746th AAA Gun Bn., Ft. Lewis, Wash.
Loos, Alfred R., RFD, Orangeburg, N. Y.
Lovejoy, Jos., Jr., Queens Farms, Conn.
Luczak, B. R., 221 Iris Way, Palo Alto, Calif.

Lutes, LeRoy, Jr., GHQ, FEC, APO 500, c/o PM, San Francisco, Calif.
Lutz, J. C., 6407 Hammel Ave., Cincinnati 12, Ohio.
McCormick, G. E., Jr., 22d AAA Group, Ft. Custer, Mich.
McCormick, J. K., 440-10 Kearney, Ft. Leavenworth, Kan.
McCrae, James L., BOQ, Ft. Lesley J. McNair, Washington, D. C.
McDermott, F. A., 236 W. 256th, Bronx 63, N. Y.
McGee, Chas. L., 1431 Judson Ave., Evanston, Ill.
McGuire, M. J., 62 Patterson Ave., Stratford, Conn.
McKee, Geo. S., 411 Fairview Rd., Springfield, Delaware County, Pa.
McLamb, N. A., 4th Inf. Div., Ft. Ord, Calif.
McLean, Harold A., 132 Belvedere Dr., Mill Valley, Calif.
McMillan, E. E., 120 Hope St., Bristol, R. I.
McMinn, James, Box 386, Carlsbad, N. M.
McSwiney, F. B., 197th AAA Gp., Cp. Gordon, Ga.
MacGrain, Donald, Sr. Instr., OBC Team "2," The Ground General School, Ft. Riley, Kan.
Mannes, C. O., Jr., 4509 W. Holgate St., Seattle 6, Wash.
Marsh, C. T., Jr., Qtrs. 114-11, West Point, N. Y.
Marshall, O. K., 318-6 Doniphan Ave., Ft. Leavenworth, Kan.
Martin, John B., 414 S. 47th St., Philadelphia 45, Pa.
Martz, F. L., Hq., 10th Group, Ft. Lewis, Wash.
Mathes, Edw. S., 40th AAA Brig., APO 503, c/o PM, San Francisco, Calif.
Matthews, V. S., 425 MacArthur Ave., San Jose 28, Calif.
May, M. A., Jr., Hq., 34th AAA AW Bn., Ft. Bliss, Tex.
Michael, Don T., 323 Plum St., Cincinnati 2, Ohio.
Miller, Gay E., OCAFF, G-3, Ft. Monroe, Va.
Milmore, O. H., 1028 Merced St., Berkeley 7, Calif.
Mitchell, Elmo C., 230 E. Cambridge Ave., College Park, Ga.
Mize, W. W., 530 N. Oxford St., Arlington, Va.
Meagher, J. M., 2956 Bainbridge Ave., New York 58, N. Y.
Meermans, L. H., RFD 3, Allison Park, Pa.
Meinert, F. H., 30th AAA AW Bn., Ft. Custer, Mich.
Moehle, Wm. F., 514 Columbia Ave., Des Plaines, Ill.
Monico, F., 698th AAA Gun Bn., 5917 Broadway, Chicago 40, Ill.
Moody, A. E., 107 W. Highland St., Malvern, Ark.
Moore, Robt. F., 65th AAA Gun Bn., APO 331, c/o PM, San Francisco, Calif.
Moorman, R. R., INFOSECT, Hq., 8th Army, APO 343, c/o PM, San Francisco, Calif.
Morgan, R. L., 18 Woodland Rd., Barrington, R. I.
Morse, W. W., 1155 9th St., Berkeley, Calif.
Mullender, J. D., 1443 N. Velinda Ave., Puente, Calif.
Murphy, A. J., 3019 Ferguson Rd., Cincinnati, Ohio.
Murray, D. B., Hq., ROTC, UCLA, Los Angeles 24, Calif.
Murray, W. H., Hq., West. AAAC, Hamilton AFB, San Rafael, Calif.
Nagel, Jas. R., 303 Palm St., National City, Calif.
Neill, Sam S., Hq., 7809 SCU, APO 403, c/o PM, New York, N. Y.
Nelson, J. G., US Army GHQ, FEC, APO 500, c/o PM, San Francisco, Calif.
Nelson, W. M., Marine Corps Recruit Depot, San Diego, Calif.
Neprud, Leif, Hq., 8th AAA AW Bn.-SP, Ft. Custer, Mich.
Newcomer, F. K., Jr., 1516 Timber Lane, Falls Church, Va.
Newlin, S. A., 42 Washington Ave., Ft. Thomas, Ky.
Nicholson, Wm. H., 753d AAA Gun Bn., APO 503, c/o PM, San Francisco, Calif.
Nodell, Richard E., Box 215, Farmingdale, N. Y.
Norrish, V. M., c/o International General Electric Co., 570 Lexington Ave., New York 22, N. Y.
Nunamaker, R. O., 905 Woodmont Blvd., Nashville, Tenn.
Nye, David B., c/o J. C. Haskett, Oceana, Va.
Oakley, A. C., 431 S. Fourth St., North Wales, Pa.
O'Connor, J. C., 80 Norman Ave., Brooklyn 22, N. Y.
Ogilvie, J. M., Jr., N. H. Mil. Dist., Manchester, N. H.
O'Malley, C. S., Jr., 933d AAA AW Bn., APO 713, c/o PM, San Francisco, Calif.
Orman, L. M., 45-3 Revere Rd., Drexel Hill, Pa.
Owen, Richard W. Antiaircraft Journal, 631 Pennsylvania Ave., N.W., Washington 4, D. C.
Page, R. M., Jr., College of William and Mary, Williamsburg, Va.
Parker, James C., Hq., 96th AAA Gun Bn., Ft. Bliss, Tex.
Parks, N. G., Marsh Rd., Pittsford, N. Y.
Payne, H. S., 2425 16th Ave., San Francisco 16, Calif.
Payne, L. E., c/o Jackson & Moreland, 600 Park Square Bldg., Boston, Mass.
Pelzer, E. D., Hq., 717th AAA Gun Bn.-90mm, Box 495, Albuquerque, N. M.
Persell, R. M., 7216 Zimple St., New Orleans, La.
Peterson, A. C., 408 Juniper Lane, Falls Church, Va.
Peterson, Capers L., 119 Montague Ave., Greenwood, S. C.
Peterson, I. A., 607 Jenney's Lane, Alexandria, Va.
Phillips, A. J., Jr., 3401 Centenary, Dallas 5, Tex.
Pierre, Geo. H., 518th AAA Gun Bn., Ft. Lewis, Wash.
Pindar, Geo. F., Hq., 552d AAA Gun Bn.-90mm, APO 403, c/o PM, New York, N. Y.
Pindell, John H., 2813 E. 75th St., Seattle 5, Wash.
Pirkle, R. L., Jr., 501st AAA Gun Bn., Ft. Meade, Md.
Platt, R. G., 64 Williamsburg Rd., Alexandria, Va.
Pope, Thos. H., 1807 College St., Newberry, S. C.
Porter, G. U., OCAFF, T-513, Apt. 1, Ft. Monroe, Va.
Potts, Hubert T., Carter St., Front Royal, Va.
Powers, A. B., OFC. Army Instr., NG, PO Box 9, Ft. Bliss, Tex.
Prado, Eduardo, Spanish Embassy-Air Attaché, Washington, D. C.
Pratt, Ford E., Hq., Alaskan Command, APO 942, c/o PM, Seattle, Wash.
Price, H. D., 3795 Kipling Ave., Berkley, Mich.
Price, W. H., Jr., Hq., CINC, Carribbean, Quarry Heights, Canal Zone.
Priest, Perry B., G-1, Hq., 8th Army, APO 343, c/o PM, San Francisco, Calif.
Pyle, T. H., 110 W. 30th St., Wilmington, Del.
Quinlan, Edw. W., 2509 ASU, District of Columbia, 2001 E. Capitol St., Washington, D. C.
Quirey, W. O., 3543 S. Utah St., Fairlington Apts., Arlington, Va.
Raleigh, R. C., 3243 ASU, ROTC, Jacksonville St. Tcrs. Co., Jacksonville, Ala.
Ramey, H. S., Box 7, Fabens, Tex.
Ramsay, W. W., 832 Erie St., Oakland 10, Calif.
Ranney, D. A., AA & GM Cen. Ft. Bliss, Tex.
Ratcliffe, L. C., Hq., Eastern AAAC, Mitchell AFB, N. Y.
Rauch, A. R., Comm. Basic Phys. Sc., Research & Development Board, Pentagon, Washington 25, D. C.
Rawls, J. W., Jr., Rt. 1, Box 43-A, Falls Church, Va.
Raymond, M. B., 3132 Willington Rd., Alexandria, Va.
Reed, F. J., 4027 Morrell, San Diego 9, Calif.
Reed, P. L., 20217 Lanbury Ave., Cleveland 22, Ohio.
Regmund, Jerry, Box 814, Corpus Christi, Tex.
Rehkop, R. G., 180 Wyoming St., Carbondale, Pa.
Renfrew, C. L., 68 Fowler Ave., Kenmore 17, N. Y.
Reubel, H. R., Prairie View A & M College, Prairie View, Tex.
Rice, Wm. H., 228 Seaton Rd., Stamford, Conn.
Ridgell, J. McF., Jr., 1004 Tenth St., Alexandria, Va.
Rieman, Wm. H., 3642 Devonshire Rd., Detroit 24, Mich.
Riley, John A., 8409 Palmetto St., New Orleans, La.
Ritterbush, M. F., Hq. & Hq. Sqdn., AAAC, APO 942, c/o PM, Seattle, Wash.
Robbins, A. D., Comptrollers' Sect., Hq., 2d Army, Ft. Meade, Md.
Robbins, H. M., Hq., 519th AAA Gun Bn., Ft. Lewis, Wash.
Robbins, O. O., 1911 Kenwood Parkway, Minneapolis, Minn.
Rochow, H. E., 301 Spencer Ave., Lancaster, Pa.
Rogers, Daniel, Linglestown RD No. 1, Dauphin County, Pa.
Rogers, Paul W., 1445 W. Third Ave., Columbus 8, Ohio.
Root, W. G., Hq., Transportation School, Ft. Eustis, Va.
Roth, Arthur, 7712th E.C.I.S., APO 172, c/o PM, New York, N. Y.
Roth, Irving D., 305 Sherman Ave., Ft Leavenworth, Kan.
Rothwell, F. G., Amer. Embassy, Bucharest, Rumania, c/o Msg. Cen. Br., Intel. Div., Pentagon, Washington 25, D. C.
Rouliot, P. (Lt. Cmdr.), French Naval Att., 1759 "R" St., N.W., Washington 9, D. C.
Routh, D. B., 3637 Chesapeake Ave., Hampton, Va.
Rumph, Raymond W., Dept. of M.P.&L., USMA, West Point, N. Y.
Russell, M. R., Stu. Det., Armed Forces Staff College, Norfolk 11, Va.
San Souci, R. A., 657 Colusa Ave., Berkeley 7, Calif.
Santilli, Carl, Hq., 260th AAA Gp., Cp. Edwards, Mass.
Santos, M. M., Hq. & Hq. Det., Seacoast Br., TAS, Ft. Scott, Calif.
Saylor, L. C., 126 Vernon St., San Francisco, Calif.
Schaefer, A. F., 62d AAA AW Bn.-SP, Ft. Hood, Tex.
Schisgall, L., Hq., 212th Group, 126 W. 62d St., New York 23, N. Y.
Schouman, Hazen C., Hq., Ft. MacArthur, San Pedro, Calif.
Schrader, J. R., Jr., c/o Math. Dept., USMA, West Point, N. Y.
Schreiber, Wm. L., 1420 Mt. Vernon Memorial Blvd., Alexandria, Va.
Shriver, S. V. B., Knox Ave., Cockeysville, Md.
Schumacher, C. A., 1116 Embury St., Pacific Palisades, Calif.
Schweidel, K. R., AA & GM Br., TAS, Box 137, Ft. Bliss, Tex.
Seitz, J. A., Secretary, TAS, Ft. Sill, Okla.
Sell, W. B., AFF Bd. No. 4, Ft. Bliss, Tex.
Selwyn, Geo. V., 200 Wootten Ave., Chevy Chase 15, Md.
Shannon, I. H., 230 Plum St., Nogales, Ariz.
Shearouse, J. D., Hq., 65th AAA Group, Ft. Clayton Canal Zone.
Shepardson, F. H., ORC, Sect., Hq., USAF, Antilles, APO 851, c/o PM, New York, N. Y.
Sherman, Elmer R., 2 Benefit St., Westerly, R. I.
Shoemaker, John J., 612 McClellan, Ft. Leavenworth, Kan.
Shreve, Chas. U., 716 Ford Bldg., Detroit 26, Mich.
Shumaker, T. P., A-7, University Court Apts., Tuscaloosa, Ala.
Sigel, Dave, Grayland, Wash.
Sills, T. W., G-4, Hq., USARPAC, APO 958, c/o PM, San Francisco, Calif.
Simon, L. A., Hq., AA & GM Cen., Ft Bliss, Tex.
Singleton, B., Buckroe Beach, Va.
Singleton, C. E., 8023 Comp. Sv. Co., APO 7, c/o PM, San Francisco, Calif.

Skinrood, N. A., Armed Forces Staff College, Norfolk 11, Va.
Slavin, Geo. F., 143 Willow St., Garden City, L. I., N. Y.
Slavin, John, 34 Pilgrim Rd., Wellesley 81, Mass.
Smigelow, H. G., 3545 S. Stafford St., Apt. B-2, Fairlington, Arlington, Va.
Smith, Eugene, 5345 Zara Ave., Richmond, Calif.
Smith, H. T., Staff & Faculty, Ft. Sill, Okla.
Smith, Kimball C., Hq., 933d AAA AW Bn., APO 704, c/o PM, San Francisco, Calif.
Smith, Page E., 88th Abn. AA Bn., 11th Abn. Div., Ft. Campbell, Ky.
Smith, R. G., Jr., NW Mil. & Naval Academy, Walworth, Wis.
Smith, Wm. A., 753d AAA Gun Bn., APO 919, c/o PM, San Francisco, Calif.
Spaans, Harold R., 210 Pine St., c/o Bell Telephone Co., Harrisburg, Pa.
Spann, C. E., USMA, West Point, N. Y.
Spengler, H. M., 214 Meade Ave., Ft. Leavenworth, Kan.
Spoon, D. O., Box 919, Aberdeen, Wash.
Stearns, Reid F., 278 Orchard Rd., Newark, Del.
Steely, O. B., 61st TC Group, Rhein-Main AFB, APO 57, c/o PM, New York, N. Y.
Stevens, R. A., Jr., 124 Highland Ave., Fitchburg, Mass.
Stewart, Joe R., Box 1060, Silver City, N. M.
Stewart, L. M., Hq., USARAL, APO 942, c/o PM, Seattle, Wash.
Stockdon, W. I., Jr., 1915 3d Ave., Richmond 22, Va.
Stone, W. T., 33 Stoddard Way, Berkeley, Calif.
Suddard, H. A., 437 Main St., Wareham, Mass.
Sullivan, D. M., Loch Lomond, Dingmans Ferry, Pa.
Sullivan, M. T., 2409 Edgewood Ave., Anderson, S. C.
Talbert, A. E., Apt. B-1, Windsor Tower, 41st St. & Tudor City Pl., New York, N. Y.
Tarves, Kenneth J., 245 Freidenburg Rd., Mt. Penn, Reading, Pa.
Tate, Roy A., Hq., 11th AAA AW Bn.-SP, Ft. Lewis, Wash.
Thomas, G. C., 6 Quintard Ave., Old Greenwich, Conn.
Thomas, R. G., Qtrs. 403, Ft. Bliss, Tex.
Thompson, E. H., Jr., 4401 Gladwyne Dr., Bethesda 11, Md.
Thompson, G. C., Marmion Military Academy, Aurora, Ill.
Thompson, W. G., 925 Maycroft Rd., Lansing, Mich.
Thorkelson, W. L., Apt. 4, Oakdale Court, Syracuse, N. Y.
Thorp, K. E., 523 Summit Ave., Crookston, Minn.
Timmerman, C. A., 28 Polo Rd., Great Neck, L. I., N. Y.
Towner, J. G., 3525 Stanford, Dallas 5, Tex.
Townsend, H. F., 3820 Mesa Verde Dr., Albuquerque, N. M.
Tredennick, J. C., G-1, Hq., USAF, APO 777, c/o PM, New York, N. Y.
Tubbs, Harry S., Hq., AFF, Ft. Monroe, Va.
Turner, John G., Hq., 8th Army, G-3, APO 343, c/o PM, San Francisco, Calif.
Turner, Robt. A., BOQ 243, Ft. Bliss, Tex.
Twyman, J. H., Jr., 1408 Greenwood Ave., Mobile, Ala.
Ulano, B., 320 Broadway, New York, N. Y.
Underwood, G. V., Hq., 867th AAA AW Bn., APO 942, c/o PM, Seattle, Wash.
Uter, Wm. H., 843 Park Pl., Brooklyn, N. Y.
Utke, Russell O., 3653 41st Ave., W., Seattle 99, Wash.
Vail, Wm. H., Jr., 6510 Glenmore Dr., Apt. 18, Falls Church, Va.
Vestal, Wm. M., 504th AAA Gun Bn., Ft. Custer, Mich.
Virag, Alfred, 2230 Montana St., El Paso, Tex.
Voehl, W. E. H., 4404 ASU, PO Box 1018, Santa Fe, N. M.
Von Kolnitz, H., Hq., 8th AAA AW Bn.-SP, Sault Ste. Marie, Mich.
Voorhees, John S., 62 Beech St., White Plains, N. Y.
Wahlgren, N. C., 6527 94th St., S.W., Tacoma, Wash.
Wald, John J., Dept. Math., USMA, West Point, N. Y.
Walla, J. F., 20-09 21st Ave., Astoria, L. I., N. Y.
Wallace, Wm. A., 120 S.W. Lynnridge Ave., Cedar Hills, Beaverton, Ore.
Wallis, S. T., III, 1502 Delaware Ave., Wilmington, Del.
Wardell, H. O., RFD 1, Box 60-B, New Castle, Del.
Warfield, Benj. M., 810 Allan St., Jefferson Village Apts., Falls Church, Va.
Watson, John T., 50 Sena Plaza, Santa Fe, N. M.
Weaver, L. C., 5050 London Rd., Duluth 4, Minn.
Weld, Seth L., Jr., Hq., 5th AAA Group, North Richland, Wash.
Wellenwreiter, F. L., Dept. MS&T, University of Cincinnati, Ohio.
Whitaker, W. F., 415 S. East Ave., Oak Park, Ill.
Wilkes, John S., Hq., 70th AAA Gun Bn., Ft. Meade, Md.
Williams, A. C., 6807 ASU, ROTC, University of California, Berkeley, Calif.
Williams, Robt. B., 24 Bonita Ave., Piedmont 11, Calif.
Williams, R. C., Arty. Sect., Hq., 1st Army, Governors Island, New York 4, N. Y.
Wills, Harold P., 22d AAA AW Bn., Hq., APO 331, c/o PM, San Francisco, Calif.
Wilson, Donald B., Hq., Caribbean Command, Quarry Heights, Canal Zone.
Witt, Landon A., Hq., 59th AAA AW Bn.-SP, Ft. Bliss, Tex.
Wollaston, P. H., 800 S. Arlington Mill Dr., Arlington, Va.
Wood, J. E., Jr., 3414 Porter Ave., El Paso, Tex.
Woodbury, K. J., G-3, GHQ, FEC, APO 500, c/o PM, San Francisco, Calif.
Woodes, R. C., Ofc. Army Instr., N.J. NG, 122d AAA Gun Bn. Armory, Atlantic City, N. J.
Worthy, C. M., 71st AAA Gun Bn., Ft. Belvoir, Va.
Wuest, W. J., Qtrs. 544 Ft. Bliss, Tex.
Zacharias, R. M., 617 Main St., Latrobe, Pa.
Zimmerman, P. J., 1427 Elm St., Pittsburgh 21, Pa.
Zwissler, Herman A., PO Box 504, Patchogue, L. I., N. Y.

MAJORS

Abston, Aaron A., 413 Gore Blvd., Lawton, Okla.
Ackner, Ned, 209-3 Third St., Ft. Leavenworth, Kans.
Adams, Robert C., 250 Morrison Dr., Pittsburgh 16, Pa.
Ahrens, A. M., PO Box 25, Ft. Clayton, Canal Zone.
Allbee, Harold J., Nye Lane, North Falmouth, Mass.
Allen, T. L., 102 N. Prevost St., Anderson, S. C.
Anderson, John E., Jr., 162 Alexander St., N.W., Atlanta, Ga.
Anderson, Robert W., Rt. 5, Box 507, Puyallup, Wash.
Arant, L. N., 2603 1st Ave., Seattle, Wash.
Arnold, Samuel M., Hq. Btry., 867th Bn., APO 942, c/o PM, Seattle, Wash.
Arthur, John E., Jr., University of Delaware, Newark, Del.
Arthur, J. G., 50 E. Hawthorne, Valley Stream, N. Y.
Asherman, George, 256 E. 68th St., New York, N. Y.
Aylward, J. P., Jr., 1312 E. 79th St., Kansas City 5, Mo.
Backstrom, B. H., 5038 38th Ave., N.E., Seattle, Wash.
Badger, A. R., Opns. Res. Office, Johns-Hopkins University, Ft. McNair, Washington 25, D. C.
Bailey, J. H., 10 E. Church St., Elberton, Ga.
Baker, Phillip H., 3431 S. Labrea Ave., Los Angeles, Calif.
Baker, Russell E., 8637 S. Bennett Ave., Chicago, Ill.
Baker, W. A., 209 New St., Belleville, N. J.
Balding, W. R., Jr., 20 Center St., Geneseo, N. Y.
Ball, Marvin T., Jr., 216 Berry Ct., Sandston, Va.
Banks, P. T., 17 Lennon Ct., South Boston 27, Mass.
Bard, Robert T., 6415 Fairfax Rd., Apt. 21, Chevy Chase 15, Md.
Barker, Edmund L., 41 Allison St., Concord, N. H.
Barker, Leonard C., 76th AAA AW Bn., APO 713, c/o PM, San Francisco, Calif.
Barnett, W. H., 2721 Wheeling St., El Paso, Tex.
Bartlett, Kenneth R., 9 Russell St., Plymouth, N. H.
Barton, Jack E., G-4 Sect., GHQ, FEC, APO 500, c/o PM, San Francisco, Calif.
Bassford, N. D., Box 208, Torrington, N. Y.
Bastian, Benj. H., 3639 Villa Terrace, San Diego, Calif.
Bayerle, Geo. J., Jr., Dept. Matériel, TAS, Ft. Sill, Okla.
Bazar, C. M., 1440 Westminster St., Providence, R. I.
Beavers, Von D., 1711 S. 11th St., Temple, Tex.
Beck, Willard S., 200 N.E. 79th Ave., Portland 13, Ore.
Behrend, W. R., 39th AAA AW Bn., Ft. Meade, Md.
Bekaert, Chas. J., 2712 Mimosa Pl., Wilmington, N. C.
Belin, R. M., Hq., 12th AAA Gp., Ft. Bliss, Tex.
Bell, Francis L., PO Box 510, Lancaster, S. C.
Bell, W. B., VPI, Blacksburg, Va.
Bennett, Allen, N. 32d St., W., Bradenton, Fla.
Bennett, W. J., Hq., USA Carib., G-1 Sect., Ft. Amador, Canal Zone.
Benit, Dudley J., Hq., 22d AAA AW Bn., APO 331, c/o PM, San Francisco, Calif.
Berendt, Herbert W., 250 Orchard Ave., Northville, Mich.
Berg, Edmund H., 1201 7th Ave., W., Seattle, 99, Wash.
Berry, G. G., 50 Parcot Ave., New Rochelle, N. Y.
Bertelmann, W. P., 1938 E. Tremont Ave., Bronx 62, N. Y.
Bettge, Henry M., 50 Sadlier Dr., Indianapolis 19, Ind.
Biggar, Walter T., 46 Wayside St., Springfield 8, Mass.
Biscup, F. S., 4632 S. Sacramento, Chicago 32, Ill.
Bogue, Wm. B., Hq., 60th AAA AW Bn., Ft. Ord, Calif.
Bolton, J. C., Sr. Instr. ORC, APO 851, c/o PM, New York, N. Y.
Borges, W. H., 119 Wellington Rd., S., West Hempstead, N. Y.
Bornscheuer, W. H., 27 Ninth St., Carle Pl., L. I., N. Y.
Bowles, Thos. P., Jr., 1600 Bellevue, Richmond 22, Va.
Boyer, Jack K., Box 213, Taos, N. M.
Boyer, John F., One Wall St., New York 5, N. Y.
Boynton, J. E., 12 Butler St., Laconia, N. H.
Bradford, C. B., Jr., 1124 Wellesley Way, Modesto, Calif.
Bresnan, D. F., 1125 Massachusetts Ave., Arlington, Va.
Brightman, J. Y., Box 444, AAA and GM Br., TAS, Ft. Bliss, Tex.
Broussard, Dennis, Hq., 40th AAA Brig., APO 503, c/o PM, San Francisco, Calif.
Brown, Chas. M., Ft. Belvoir, Va.
Brown, H. W., 643 Perry St., Gainesville, Ga.
Brown, Lloyd C., Box 386, AAA & GM Br., TAS, Ft. Bliss, Tex.
Brown, P. G., 502d AAA Gun Bn., APO 937, c/o PM, Seattle, Wash.
Brown, Ralph E., Box 86, Clinton, Miss.
Browne, J. T., Hq., 903d AAA AW Bn., Ft. Clayton, Canal Zone.
Bruns, Stock D., 176 Sussex Ave., Newark, N. J.
Buchanan, Frank M., 3901 S.W. 60th Ave., Miami, Fla.
Burlingame, John H., 928 Judson Ave., Evanston, Ill.
Burns, Burton, 9651 S. Merrion St., Chicago, Ill.
Burns, William C., 5715 25th St., North Arlington, Va.
Burt, Russell E., Court House Annex, Laconia, N. H.

Buskirk, Winfred, 1807 E. Lead Ave., Albuquerque, N. M.
Caffey, Wm. G., Jr., Hq., 226th AAA Gp., Ft. Bliss, Tex.
Calkins, James E., Hq., ASA, The Pentagon Bldg., Washington 25, D. C.
Campbell, E. W., 2804 Norwood Ave., Merchantville, N. J.
Campbell, G. L., 2927 Louisville St., El Paso, Tex.
Campbell, John E., 70th AAA Gun Bn., Ft. Meade, Md.
Cannady, Preston B., APO 206-A, c/o PM, New York, N. Y.
Carpenter, E. H., ARCTIL Test Br., OCAFF, APO 733, c/o PM, Seattle, Wash.
Carrera, R. C., 368 Summer St., New Bedford, Mass.
Carter, Erle P., 2218 Sulgrave Ave., Baltimore 9, Md.
Casey, Chas. W., AFF Bd. No. 4, Ft. Bliss, Tex.
Caswell, John 1726 Massachusetts Ave., N.W., Washington 6, D. C.
Caulfield, Thos. D., 3422 Hueco St., El Paso, Tex.
Cazaubon, Wm. E., 3105 Patterson St., New Orleans 14, La.
Chamberlin, Lawrence N., 3221 Gaylord Ave., Dormont Pitt 16, Pa.
Champion, Geo. E., 1217 E. 82d Terrace, Kansas City, Mo.
Chapman, Wm. N., 7405 Ridge Ave., Chicago, Ill.
Chavis, Thos. N., 612 Mission Rd., El Paso, Tex.
Cheetham, James A., Dutton, Mont.
Chesney, G. R., 215 Marshall, Lansing 12, Mich.
Chittenden, A. O., 8259th SU, APO 957, c/o PM, San Francisco, Calif.
Cito, Albert V., 552d AAA Gun Bn., APO 403, c/o PM, New York, N. Y.
Clanton, Henry M., AFF Bd. No. 4, Ft. Bliss, Tex.
Cleaver, Thayer, University of Illinois, Urbana, Ill.
Clements, Thos. H., 695 Monticello Dr., Falls Church, Va.
Cole, Cecil R., Box 366, Danville, Calif.
Cole, D. M., Jr., 1351 23d St., Manhattan Beach, Calif.
Cole, Harold S., Seaford Inn, Seaford, Del.
Coleman, David A. Holton, Kansas.
Collingwood, Wm. T., 605 E. Rio Grande, El Paso, Tex.
Collins, L. D., 101st AAA Gun Bn., Cp. Stewart, Ga.
Collison, T. D., 67 Hoffman St., Columbus, Ohio.
Colman, A. S., 8 Granite St., Portsmouth, N. H.
Colomb, H. P., 539 Carol Dr., East Jefferson Parish, La.
Colquitt, R. M., Jr., Hq., East. AAAC, Mitchel AFB, New York, N. Y.
Comenos, Chas., 494th AAA AW Bn., 31 Waterhill St., Lynn, Mass.
Cone, Sidney L., Hq., USARAL Ardot, APO 942, c/o PM, Seattle, Wash.
Conlyn, A. G., 906 N. Fillmore St., Arlington, Va.
Connelly, John B., 504th AAA Opns. Det., Ft. Bliss, Tex.
Connelly, R. J., Hq., 19th AAA Gp., Ft. Meade, Md.
Cook, Daniel G., 116 Orange St., San Rafael, Calif.
Coontz, John B., 1002 21st St., Santa Monica, Calif.
Corley, W. E., Jr., Duval County Armory, Jacksonville, Fla.
Cosper, Wm. R., Jr., 3155 Ridgewood Rd., N.W., Atlanta, Ga.
Counley, R. T., 590 Walnut Ave., Grand Junction, Colo.
Covert, John R. M., 204 Kensington Rd., Garden City South, L. I., N. Y.
Cowan, R. W., 3215 Clark St., Des Moines, Iowa.
Cox, Edwin B., 68 Valley Terrace, Portchester, N. Y.
Cox, Wm. B., 2133 St. Roch St., New Orleans, La.
Creamer, Frank C., Box 713, Anderson, S. C.
Crook, Sydney L., 64 Frost St., Cambridge 40, Mass.
Crowe, J. H., AA & GM School, TAS, Ft. Bliss, Tex.
Crowley, Francis, BOQ 1851, Ft. Bliss, Tex.
Cummings, Hugh G., 6001 S.W. 46th Terrace, Miami, Fla.
Cunningham, H. A., Jr., Hq., AFF, Bldg. 4, Gen. Elec. Co., Schenectady, N. Y.
Cushing, C. B., 30th and Virginia Ave., Newport News, Va.
Dalrymple, R. K., Stu. Det., AA & GM Sch., Ft. Bliss, Tex.
Daniel, Robert J., 290 Walton Dr., Buffalo 21, N. Y.
Daniel, Roy E., Jr., Hq., 11th AAA AW Bn., Ft. Lewis, Wash.
Davenport, C. M., Jr., Fla. A&M College, Tallahasse, Fla.
Davis, D. D., 5553 Belmont Ave., Cincinnati 24, Ohio.
Davis, Dale V., 409 Military Ave., Dodge City, Kan.
Davis, Gerald W., 50 Park St., Bonne Terre, Mo.
Davis, Ovid M., Btry. C, 37th AAA Gun Bn., APO 503, c/o PM, San Francisco, Calif.
Davis, S. L., Benoit, Miss.
Davis, T. D., 604 Franklin Ave., Brooklyn 16, N. Y.
Defreese, S. J., Monroe, Ga.
Degyansky, Wm., 1664 Roberts Lane, Falls Church, Va.
DeLatour, F. A., 227 Jerome Ave., Carle Pl., L. I., N. Y.
Deluce, Louis F., 1511 E. 36th Pl., Tulsa, Okla.
Demoisy, R. G., 4010 Union Bay Circle, Seattle 5, Wash.
Denby, Roland E., C&S Dept., TAS, Ft. Bliss, Tex.
Denton, Carlton, 5845 Russell St., Detroit, Mich.
Dever, R. E., 1705 W. 6th St., Aberdeen, Wash.
Dillon, James R., AFF Bd. No. 4, Ft. Bliss, Tex.
Doane, Leslie O., 4323 Bliss St., El Paso, Tex.
Donahue, Frank J., 3741 N. 53d St., Milwaukee 16, Wis.
Donnell, C. P., 1533 W. Glenrosa Ave., Phoenix, Aiz.
Downey, John J., Jr., Hq., 35th AAA Brig., Ft. Meade, Md.
Downs, C. R., Holly Hill, S. C.
Doyle, Jos H., 753d AAA Gun Bn., APO 919, c/o PM, San Francisco, Calif.
Drachman, A., 825 N. Patton Ave., Arlington Heights, Ill.
Droke, A. B., 6614 GM Br., 2210 Selby Ave., West Los Angeles, Calif.
De Parc, J. M., AFF Bd. No. 4, Ft. Bliss, Tex.
Dyar, Robert W., Liberty St., Washington, Ga.
Eastes, G. D., 928 B St., Portsmouth, Va.
Eaton, Harry E., 502d AAA Opns. Det., Ft. Custer, Mich.
Eckstein, Paul A., 373 N. Granda St., Arlington, Va.
Edwards, Chas. C., 2707 Chamberlayne Ave., Richmond, Va.
Ellard, Geo. E., 28 King Ave., Medford, Mass.
Ellerthorpe, S. V., 84 N. Main St., Ellenville, N. Y.
Elliott, Glenn P., Hq., 65th AAA Gun Bn., APO 331, c/o PM, San Francisco, Calif.
Engel, R. H. M., III, AAOC 1, Stu. Off. Det., Ft. Sill, Okla.
Epley, Albert D., 85 Ferne Blvd., Drexel Hill, Pa.
Evans, B. S., Jr., Dept. of Chemistry, West Point, N. Y.
Falls, R. E., 1911 Eugene Field, St. Joseph, Mo.
Farr, Alonzo W., 270 Stanley Pl., Hackensack, N. J.
Farrar, Wm. L., Co. A, Army Lang. Sch., Presidio of Monterey, Calif.
Farris, S. C., American Embassy, Rome, Italy.
Ferguson, L. W., Brty. A., 29th AAA AW Bn, APO 7, Unit 4, c/o PM, San Francisco, Calif.
Fisher, H. M., 1002 W. Franklin St., Richmond, Va.
Fisher, J. P., 239 Noble St., Kutztown, Pa.
Fleming, Thomas J., 4308 N. Verde, Tacoma 7, Wash.
Flagg, L. S., III, 79 Decatur St., Brooklyn 16, N. Y.
Flanagan, J. R., Poplar Ave., Box 341, Westville Grove, N. J.
Fleck, Levan R., 205 W. Post Rd., White Plains, N. Y.
Flint, B. P., Jr., 67th AAA Gun Bn., Ft. Bliss, Tex.
Flook, Kenneth G., Dependent Mail Sect., APO 201, Unit 5, c/o PM, San Francisco, Calif.
Floto, John L., 419 Eureka St., Pittsburgh 11, Pa.
Folk, H. A., 26 E. James St., Lancaster, Pa.
Fortunato, N. J., 664 E. 223d St., New York 66, N. Y.
Foster, Russell G., 607 N. 4th St., Mankato, Minn.
Fox, Elmer W., 1219 Tapt, Lawton, Okla.
Francis, Joseph H., 102 Edgars Lane, Hastings on the Hudson, N. Y., N. Y.
Frei, John K., Hq., 10th AAA Gp., APO 660, c/o PM, San Francisco, Calif.
French, J. H., 10371 Louisiana Ave., Los Angeles 25, Calif.
Fuller, Carl W., 4329 Memphis St., El Paso, Tex.
Funke, Nath. L., 26 River Rd., Cos Cob, Conn.
Furr, Carl J., Army Lang. School, Presidio of Monterey, Calif.
Gamble, David S., 2314 Alameda Ave., El Paso, Tex.
Garber, M. M., 12 Putman Heights, Hartford, Conn.
Gardner, Richard M., 761 Highvue Rd., Pittsburgh, Pa.
Garwood, E. F., U.S. Consul. Gen., APO 742, c/o PM, New York, N. Y.
Gebrian, M., Box 223, Southampton, N. Y.
Gercke, Fred, 900 N. Lombardy St., Richmond 20, Va.
Glasgow, Ralph E., 1016 43d Pl., Bellview Heights, Birmingham, Ala.
Glickson, Arthur W., 851 E. 80th St., Chicago, Ill.
Goettl, J. P., Box 112, Ft. Bliss, Tex.
Goldblum, K. D., Box 75, Ft. Bliss, Tex.
Goodman, Wm. M., 1458 Hampton Rd., San Marino 9, Calif.
Goodfellow, F. A., 21 Price Ave., Runnemede, N. J.
Goodwine, Wm. C., 1090 St. Nicholas Ave., New York, N. Y.
Gordon, T. F., 6807th ASU, ROTC, University of California, Berkeley, Calif.
Grambort, E. A., Hq., 19th AAA Gp., Ft. Meade, Md.
Grant, Andrew R., 1305 Taylor Ave., Lawton, Okla.
Graves, A. B. C., 224 Cromwell Terrace, N.E., Washington, D. C.
Gray, Kenneth S., 4033 Violet St., La Mesa, Calif.
Greene, A. Lewis, 217 Monroe St., Falls Church, Va.
Greening, O. L., 106 S. Vancouver St., Kennewick, Wash.
Haaland, Harold A., 11536 Cumpston St., North Hollywood, Calif.
Haley, John F., 5 Ellsworth Rd., Nahant, Mass.
Hallstrom, Irving T., 6511 Evergreen Hwy., Vancouver, Wash.
Hammerle, R. I., 4940 Maplewood Ave., Los Angeles 4, Calif.
Hanny, A. B., Harts Run Rd., Allison Park, Pa.
Hanson, A. F., 27 W. Preston, Sherwood Park, Hampton, Va.
Hardy, Robt. M., Palmerdale, Ala.
Harlan, Robt. D., Combat Arms Det., USMA, West Point, N. Y.
Harris, Z. C., Hq., 78th AAA Gun Bn., APO 660, c/o PM, San Francisco, Calif.
Harrison, A. C., Apt. 71C Parkway Apts., Haddonfield, N. J.
Hart, Mathew J., Jr., Glidden, Wis.
Hartung, Edw. W., Jr., 43 Thackeray Ct., Tonawanda, N. Y.
Hartwell, I. G., 110 Main St., Sandwich, Mass.
Harvey, Earl F., 709 Prince St., Alexandria, Va.
Hassler, G. O., 413 W. 5th St., Tulsa, Okla.
Hatch, C. E., Jr., 110 McPherson Lane, Greenville, S. C.
Hatch, F. M., 8409 S. Rhodes, Chicago 9, Ill.
Hawkins, Clarence C., 4015 McKenley Ave., El Paso, Tex.
Hawkins, W. J., 82 Federal St., Brunswick, Maine.

Hawley, Geo. C., 904 West Ave., Austin 21, Tex.
Hayes, John H., 120 Elizabeth Dr., Pittsburgh 21, Pa.
Hickey, Peter J., 15 W. 75th St., New York, N. Y.
Hipp, Earl C., Glenn St., Whitmire, S. C.
Hirsch, B. L., 432 Belmont Ave., Chicago 14, Ill.
Healy, J. G., 1156th ASU, State Armory, Bridgeport, Conn.
Heim, H. V., Hq., 3d Trng. Bn., Ft. Bliss, Tex.
Heist, F. W., 4455 Woodlawn Ave., Chicago 15, Ill.
Hennessy, J. I., 1129 Maple Ave., Lawton, Okla.
Henry, Chas. E., 21st AAA AW Bn., Ft. Bliss, Tex.
Henry, James M., 22 Clyde Rd., Baldwin, N. Y.
Henson, N. B., 374 Holcomb St., Hartford 5, Conn.
Hermann, Edw. K., Jr., 1020 Greentree St., New Orleans, La.
Herrick, H. C., Jr., 2111 N. Scott St., Arlington, Va.
Hogan, Chas. E., 204 Ramona Dr., El Paso, Tex.
Holdsworth, E. H., 10th AAA Gp, APO 660, c/o PM, San Francisco, Calif.
Holland, A. W., 306 Glenmore Ave., Baton Rouge, La.
Hollander, W. V., 283 Avenue C, New York 9, N. Y.
Holley, J. S., Rt. 2, Waterbury 82, Conn.
Holliday, C. D., 3756 Pioneer Pl., San Diego, Calif.
Holt, Arthur E., Hq., N.Y. & N.J. Sub Area, Ft. Totten, N. Y.
Horowics, Leo S., Hq., 97th AAA Gp., APO 331, c/o PM, San Francisco, Calif.
House, A. W., Newbury, Vt.
Hovell, Bergen B., 512 Vista Dr., Falls Church, Va.
Huffman, Joseph C., 200 Virginia Ave., Front Royal, Va.
Hujsak, Karol L., Rt. 3, Box 321A, Tulsa, Okla.
Hull, Keith M., NGB, Dept. of the Army, The Pentagon, Washington 25, D. C.
Huston, R. M., 501st AAA Gun Bn., Ft. Bliss, Tex.
Irish, Robt. G., 1504 Barclay Pl., Schenectady, N. Y.
Isenson, R. S., 901 Ainslie St., Chicago, Ill.
Iuliucci, T. P., 1918 Kinyon Ave., Lawton, Okla.
Jaekle, J. G., 151 Housatonic Dr., Devon, Conn.
Jakubowski, W. M., 540 Seaview Ave., Bridgeport 7, Conn.
James, Lee B., 3364 W. Imperial Hwy., Inglewood, Calif.
Janz, D. H., Office, Scty. of Defense, The Pentagon, Washington 25, D. C.
Jay, Robt. F., 3666 20th St., San Francisco, Calif.
Jeffries, C. C., Box 31, TAS, Ft. Bliss, Tex.
Jenson, James H., 3402 E. 7th St., Vancouver, Wash.
Johnson, C. W., Jr., Box 1547, Athens, Ga.
Johnson, Geo. M., 157 S. Oliver St., Elberton, Ga.
Johnson, Malcolm C., 5802 Edgepark Rd., Baltimore 14, Md.
Johnson, Ogden, 635 N. Woodbine, Oak Park, Ill.
Johnson, Theodore, 435 Homestead Rd., La Grange, Ill.
Johnston, H. C., 309 Farmington Dr., Alexandria, Va.
Johnston, Robt. H., Hq., 76th AAA AW Bn., APO 323, c/o PM, San Francisco, Calif.
Jones, Clarence H., Hq., 226th AAA Gp., Ft. Bliss, Tex.
Jones, Robt F., 139 Chilton Hall, Elizabeth, N. J.
Jordan, Jas. W., Hq., 226th AAA Gp., Ft. Bliss, Tex.
Judson, Wm. L., 127 S. Adelle Ave., Deland, Fla.
Kabin, A., 1147 Hellerman St., Philadelphia 11, Pa.
Kane, T. F., Jr., 310 Federal Bldg., Minneapolis, Minn.
Kapsiak, Thaddeus W., 66 Greeley St., Buffalo 7, N. Y.
Kauder, Marvin N., 933 Juno Ave., St. Paul 2, Minn.
Kaufman, Louis, 316 N. Brand, San Fernando, Calif.
Keller, H. W., Hq., 21st AAA AW Bn., Ft. Bliss, Tex.
Kelley, C. W., 868 Wilbur St., San Diego 9, Calif.
Kelly, Jas. J., Jr., Army Sec., J.B., USMC, APO 676, c/o PM, New York, N. Y.
Kelton, John E., Hq, 10th AAA Gp., Ft. Lewis, Wash.
Kemp, A. D., 36 Rip Van Winkle Way, Buzzards Bay, Mass.
Kemp, Clair A., 2126 Monroe Ave., Rochester 18, N. Y.
Kenney, Clinton, 1210 Montana St., El Paso, Tex.
Kenz, John, Hq., 59th AAA AW Bn., Ft. Bliss, Tex.
Kerr, R. E., Hotel Thayer, USMA, West Point, N. Y.
Keyson, Wesley A., 41st AAA Gun Bn., Ft. Dix, N. J.
Kirby, Lee M., Raeford, N. C.
Kirschner, Paul, 277 Avenue C, New York 9, N. Y.
Klunk, M. C. B., Jt. Mil. Mission, Turkey, APO 206-A, c/o PM, New York, N. Y.
Knox, Wm. W., Jr., Rt. 9W, Selkirk, N. Y.
Kosinar, Wm. C., 2400 Cooper Ave., Evanston, Ill.
Kruegel, C. W., 1038 Lidy St., Wenatchee, Wash.
Labarre, Rene L., 15 Corey St., Woonsocket, R. I.
Lahatte, Wm. F., AFF Bd. No. 4, Ft. Bliss, Tex.
Laing, James A., 21st AAA AW Bn., Ft. Bliss, Tex.
Lake, Gerald A., 64th AAA Gun Bn, APO 713, Unit 1, c/o PM, San Francisco, Calif.
Lambert, W. H., 4124 Bliss St., El Paso, Tex.
Lanpher, R. A., 865th AAA AW Bn., APO 713, Unit 3, c/o PM, San Francisco, Calif.
Laraway, W. B., 108 Coolidge St., Malverne, L. I., N. Y.
Larson, Lee W., 725 Arguello Blvd., San Francisco, Calif.
Lash, Eugene L., 40th AAA Brig., APO 503, c/o PM, San Francisco, Calif.
Lathrop, A. W., 77 Newport Rd., Rochester 9, N. Y.
Lavin, Thos. F., Peekskill Military Academy, Peekskill, N. Y.
Laxton, Harold, 16713 Ashton Rd., Detroit 19, Mich.
Leonard, W. H., 525 Whedbee St., Ft. Collins, Colo.
Lesperance, L. J., 3429 Van Buren St., El Paso, Tex.
Lewis, James N., 56 Hortense St., Rochester 11, N. Y.
Lewis, Raymond D., 945 Grosvenor Rd., Rochester 18, N. Y.
Lieber, Geo. M., 317 High St., Fremont, Ohio.
Lilley, M. J., 1516 Kingsway Rd., Baltimore 18, Md.
Lindsay, D. C., River Glen, Farmington, Conn.
Link, Howard C., Highwood Ave., Southington, Conn.
Long, Alvan M., 673 Brookwood Rd., Oakland, Calif.
Longacre, T. M., 716 Hallwood Ave., Falls Church, Va.
Lott, Hamilton, 1220 Woodrow St., Columbia, S. C.
Loughran, J. J., 530 Hilbar Lane, Palo Alto, Calif.
Lucas, P. R., 65th AAA Gp., Ft. Clayton, Canal Zone.
Lueth, Paul F., Jr., c/o Union Oil Co., Oleum Calif.
Lundeberg, T. R., 8151 Ingleside Ave., Chicago, Ill.
Lynch, C. R., Jr., Box 35, Lebanon, Va.
Lynch, W. J., AA & GM Br., TAS, Ft. Bliss, Tex.
McCachern, W. Y., 533 Argyle Dr., Falls Church, Va.
McCaffery, Benj., Jr., 122 Ravenwood Way, South San Francisco, Calif.
McCann, Donn M., Hq., 7th Inf. Div., APO 7, c/o PM, San Francisco, Calif.
McDuffie, T. F., 1028 S. Walnut St., San Gabriel, Calif.
McEniry, Chas., P&C Office, Ryukyus Comd., APO 331, c/o PM, San Francisco, Calif.
McFadden, D. B., Jr., AA & GM Br., TAS, Ft. Bliss, Tex.
McGrath, D. B., Hq., 5th AAA Gp., North Richland, Wash.
McIver, E. R., Jr., Box 154, Conway, S. C.
McKee, Francis L., Harrington, Del.
McKeever, R. L., Jr., 10501 Georgia Ave., Silver Spring, Md.
McNeil, T. H., 317 W. Cambridge St., Greenwood, S. C.
McQueenery, Wm. A., 97th AAA Gp., APO 331, c/o PM, San Francisco, Calif.
Maisel, Alex, 4845 Louise, San Diego 5, Calif.
Maki, G. E., 146th AAA AW Bn., 14415 Archdale Rd., Detroit 27, Mich.
Makowsky, Raymond, 631 Hope St., Bristol, R. I.
Maline, Paul J., 1724 Saunders Way Rd., Glen Burnie, Md.
Malone, Duane W., Fordham University, New York 58, N. Y.
Malone, Thos. C., 40th AAA Brig., APO 503, c/o PM, San Francisco, Calif.
Mangels, Conrad, Jr., 2731 Whiteoak Lane, Jacksonville, Fla.
Marksteiner, Norman F., 5716 W. Eastwood Ave., Chicago, Ill.
Martin, Fred M., 1209 Sherwin, Apt. 312, Chicago, Ill.
Mater, M. H., 728 N. 4th St., Corvallis, Ore.
May, C. O., Jr., 1633 St. Johns Rd., El Paso, Tex.
May, Jos. B., 30th AAA AW Bn., Ft. Custer, Mich.
Maxfield, Gordon T., 72 Chestnut St., Fairhaven, Mass.
Maynard, J. B., Jr., 1113 Chadbourne St., El Paso, Tex.
Megan, T. I., LaSalle Street Staton, Rm. 1025, Chicago, Ill.
Miller, Galen V., 2580 Folk St., San Francisco, Calif.
Miner, Timothy G., Adair, Ill.
Mitchell, A. W., 213 N. Manzand Dr., Albuquerque, N. M.
Mizulo, John, 684 Magnolia Ave., San Mateo, Calif.
Mobley, C. R., 3077 S. Woodrow St., Arlington, Va.
Moody, Douglas N., 3907 Floyd Ave., Richmond 21, Va.
Moore, Geo. C., 2426 31st Ave., San Francisco, Calif.
Morgan, Harry T. (Ret), 1431 Somerset Pl., N.W., Washington, D. C.
Morreall, W. H., 1614 Main St., East Rochester, N. Y.
Morrill, C., Jr., Hq., 260th AAA Gp., Cp. Edwards, Mass.
Morrissey, J. L., 10753 Northgate St., Culver City, Calif.
Morse, Henry P., 1st GM Regt., Ft. Bliss, Tex.
Moucha, M. F., 10 Cozzens Ave., Highland Falls, N. Y.
Muccio, F. J., 256 Naubuc Ave., Glastonbury, Conn.
Mulder, John H., AFF Bd. No. 4, Ft. Bliss, Tex.
Mundy, Reuben W., AA & GM Br., TAS, Ft. Bliss, Tex.
Murphy, Dennis V., 603 Middle St., Fall River, Mass.
Nagel, B. M., 5401 Winthrop Ave., Chicago, Ill.
Neill, Wm. H., 56th Fighter Wing, Selfridge AFB, Mich.
Nelson, Woodrow L., 5917 N. Broadway, Chicago, Ill.
Nim, Carl J., Jr., 30 New Haven Ave., Woodmont, Conn.
Oakes, Ray E., 37 Donald Pl., East Rockaway, N. Y.
Oberst, L. P., 1649 Edison Ave., Bronx 61, N. Y.
O'Brien, John A. Weapons Dept., TAS, Ft. Knox, Ky.
Oehmke, B. H., 951 Britton Rd., Rochester, N. Y.
Olhausen, J. N., AA & GM Br., TAS, Ft. Bliss, Tex.
O'Malley, John J., 2747 N. Kilbourn, Chicago, Ill.

Oritt, Jack, 5205 Drexel Rd., Philadelphia 31, Pa.
Osthues, H. E., Cas. Off. Pers. Cen, Ft. Lewis, Wash.
Paciorek, S. J., 507th AAA AW Bn., APO 201, Unit 1, c/o PM, San Francisco, Calif.
Paddenburg, J. A., Hq. Btry., 50th AAA AW Bn., Ft. Bliss, Tex.
Pafford, P. M., 383 White Rd., Mineola, L. I., N. Y.
Page, Benj. N., 617 E. Alameda St., Santa Fe, N. M.
Painter, C. H., 319 E. Walnut St., Butler, Pa.
Pallister, F. J., OCAFF, Ft. Monroe, Va.
Palizza, M. J., 77 Court St., Dover, N. H.
Pappas, C. L., Qtrs. 7-B, Ft. Leavenworth, Kan.
Parent, Joseph I, 111 Rochambeau St., New Bedford, Mass.
Parish, Claude L., 711 Oak St., Anniston, Ala.
Parr, Wm. R., 4327 Nashville St., El Paso, Tex.
Parrott, J. B., 67th AAA Gun Bn, Ft. Bliss, Tex.
Parsons, G. E., 1533 Laurel St., South Pasadena, Calif.
Parsons, M. L., 40th AAA Brig., APO 503, c/o PM, San Francisco, Calif.
Pedrotti, Peter, Qtrs. 230 Sheridan Rd., Ft. Bliss, Tex.
Peeples, E. T., 504 Knollwood Dr., Falls Church, Va.
Penney, Thos. F., 88th Abn AA Bn., Ft. Campbell, Ky.
Perry, Ben W., TIS, GHQ, FEC, APO 500, c/o PM, San Francisco, Calif.
Pettit, M. W., Box 1001, Ft. Bliss, Tex.
Philbrick, K. R., Box 347, Ft. Sill, Okla.
Phillipps, Joseph F., 2804 E. 76th St., Chicago, Ill.
Pierce, J. A., Jr., 443d AAA AW Bn.-SP, Ft. Devens, Mass.
Pike, Lloyd F., 150 Spring St., Gardiner, Maine.
Plate, M. M., 55 W. Wood St., Palatine, Ill.
Pollard, Wm. B., Jr., Rt. 5, Greenville, S. C.
Pratt, John S., 869 Park Ave., Columbus, Wis.
Price, W. P., Box 173, Ft. Bliss, Tex.
Pryor, Frank D., Jr., 309-4 First St., Ft. Leavenworth, Kan.
Purcell, C. F., 619 Carnation, Corona del Mar, Calif.
Purick, H. W., 114 W. Marie St., Hicksville, N. Y.
Rachmanow, R. R. (Ret), Box 186, La Jolla, Calif.
Rackley, P. L., 903d AAA AW Bn., Ft. Clayton, Canal Zone.
Radke, Donald G., 15886 Fordham, Detroit, Mich.
Ramberg, R. J., 157 Beal Rd., Waltham 54, Mass.
Rauffenbart, W. E., 500 Camden Ave., Moorestown, N. J.
Reagan, John F., 21st AAA AW Bn., Ft. Bliss, Tex.
Reeves, Chas. W., ROTC, Michigan State College, East Lansing, Mich.
Regan, J. L., Jr., 1692 Avon Ave., S.W., Atlanta, Ga.
Rettgers, F. I., 1926 Arlington Ave., Lawton, Okla.
Reynolds, N. L., 2320 Somerset Rd., Jacksonville, Fla.
Rhodes, John M., 30 Cranch St., Quincy, Mass.
Rice, Herbert E., 1124 ASU, Boston Army Base, Boston, Mass.
Richard, A. P., Box 188, Wilton, Maine.
Rimes, Wm. P., Statesboro, Ga.
Rinngold, Chas. L., Army Instr., 218th Gp., O'Hara & Thackeray Sts., Pittsburgh, Pa.
Ritchie, Edw. L., Jr., 823 21st St., Oakland, Calif.
Roberson, Alvin B., Jr., 13 Center St., Newark, Del.
Robertson, Wm., Jr., 15 Duncan Ave., Jersey City, N. J.
Robideaux, Robt. J., 8285th AU, USAPAC, APO 958, c/o PM, San Francisco, Calif.
Robinson, F. N., Box 1261, Lubbock, Tex.
Robotkay, H. J., 2146 W. Chicago Ave., Chicago 22, Ill.
Roddy, Francis J., Box 55, Ft. Kobby, Canal Zone.
Roeper, Edw. J., 240 Lombard St., Rochester 4, N. Y.
Roever, F. O., 124 Beach St., Westerly, R. I.
Rolph, Herbert F., AFIS, Carlisle Bks., Pa.
Rosen, Merton N., Rt. 1, Box 30A, Walnut Creek, Calif.
Ross, Ralph N., Box 1277, Ft. Bliss, Tex.
Rousey, D. L., 5545 N. Magbolia, Chicago 40, Ill.
Rousseau, Thos. H., Jr., 303-3 First St., Ft. Leavenworth, Kan.
Rousseau, Walter, 21st AAA AW Bn., Ft. Bliss, Tex.
Ruddell, N. C., Hq., Camp Crouch Yamaguilu, APO 24, c/o PM, San Francisco, Calif.
Russell, Wm. T., OCAFF, Ft. Monroe, Va.
Saberhagen, H. A., G-2 Sect., Hq., 5th Army, Chicago, Ill.
Sager, Wesley C., 204-15 26th Ave., Bayside, N. Y.
Sampson, A. E., 76 Deming St., San Francisco, Calif.
Sanders, Albert J., 189-02 64th Ave., Apt. 7-G, Flushing, N. Y.
Santino, Mathew, Hq., C&GSC, Ft. Leavenworth, Kan.
Schafbuch, D. V., 3134 Aurora St., El Paso, Tex.
Schaill, H. A., 9838 Hudson Rd., Rock Hill, Md.
Schiebel, W. J., 3100 Avenue U, Snyder, Tex.
Schmader, Wilbur P., 933d AAA AW Bn, APO 713, c/o PM, San Francisco, Calif.
Schmidt, Daniel H., 208 Granville Dr., Silver Spring, Md.
Schnur, James F., 11th AAA Gp., Ft. Bliss, Tex.
Schwartz, E. G., Rm. 201 Federal Bldg., Waco, Tex.
Schwartz, Howard, 5630 Hobart St., Pittsburgh, Pa.
Scott, Albert T., 746th AAA Gun Bn., Ft. Lewis, Wash.
Scott, John A., 1665 Rugby Rd., Schenectady 8, N. Y.
Seidman, H. W., 130-28 223d St., Laurelton, L. I., N. Y.
Shagrin, R. A., 4320 Memphis St., El Paso, Tex.
Shaver, W. F., Jr., 2155 Webster St., Alameda, Calif.
Shepard, Wm. McK., Madison St., Herndon, Va.
Sheppard, D. G., Box 662, Pensacola, Fla.
Sherman, Welford A., Jr., Orange, Va.
Sherrets, D. C., 69th AAA Gun Bn., Ft. Bliss, Tex.
Shoemaker, Kenneth W., 86 Dewey Ave., Buffalo, N. Y.
Short, R. M., Sardis, Miss.
Shoss, M. L., Mil. Dept., University of California, Berkeley, Calif.
Sigley, W. B., 5641 N. 20th, Philadelphia 44, Pa.
Sikes, Vernon F., 2946 Downing St., Jacksonville, Fla.
Simpson, Allen H., 18 Chestnut St., Lakeport, N. H.
Simpson, Robt. E., Valley Falls, Kans.
Skinner, G. L., 560 N. 21st St., Salem, Ore.
Smith, Clarence L., Jr., 303 Guaranty Life Bldg., Jacksonville, Fla.
Smith, Edward J., 145 Culver Rd., Rochester 20, N. Y.
Smith, E. L., Rm. 3-E-180, The Pentagon Bldg., Washington 25, D. C.
Smith, G. S., Box 483, Winnemucca, Nev.
Smith, Henry G., 199 Brandon Ct., Danville, Va.
Smith, Hoyt P., 3112 Nations Ave., El Paso, Tex.
Smith, Ross C., Hq., 226th AAA Gp., Ft. Bliss, Tex.
Smith, Vallard C., 18 W. Preston St., Hampton, Va.
Soherr, Ludwig, Crown Point Rd., Thorofare, N. J.
Southard, J. E., Stoy, Ill.
Sparrow, Albert W., 2 Somerset Rd., Baltimore 28, Md.
Spengler, John T. H., Box 605, St. Augustine, Fla.
Spickelmier, J. P., Grd. Gen. Sch., Ft. Riley, Kan.
Spiller, B. A., Box 643, Dover, Del.
Stackley, J. A., 907 Beaumont Ave., Baltimore 12, Md.
Stacy, R. S., Youngstown College, Youngstown, Ohio.
Stein, I., 901 N. Sacramento Blvd., Chicago, Ill.
Steinmetz, T. M., 861 Laurel St., Alameda, Calif.
Stephens, Richard H., 1323 4th St., N.E., Washington 2, D. C.
Stephenson, F. L., Stapleton Apts., Lewistown, Mont.
Stevens, D. K., Box 227, Ft. Bliss, Tex.
Stevens, J. I., 1326 Highland Terrace, Richmond Heights 17, Mo.
Stewart, Wm. W., 38 Moses Pl., Unionville, Conn.
Stiles, M. R., 1706 N. 2d St., Sheboygan, Wis.
Stokes, J. B., Jr., 65 E. Main St., Moorestown, N. J.
Story, R. M., Jr., Rt. 2, Mansfield Center, Conn.
Strasser, J. R., 1922 Roseland, Royal Oak, Mich.
Strickland, Z. L., Box 40, Ft. Sill, Okla.
Stroud, Roger C., 37 S. Warner Rd., Lafayette Hill, Pa.
Sturgis, John E., Highland Ave., Keene, N. H.
Sullivan, J. A., 5 Clifford St., Dover, N. H.
Sullivan, John L., Jr., 75th AAA Gun Bn., Ft. Meade, Md.
Sweek, Jack G., AFF Bd. No. 4, Ft. Bliss, Tex.
Swisher, S. G., 34 W. Stella Lane, Phoenix, Ariz.
Switzer, Jas. W., 66 E. Bellevue Pl., Chicago, Ill.
Syphers, LeR. S., Wildwood Park, Portland, Maine.
Taggart, W. J., Jr., c/o Equitable Trust Co., Wilmington 99, Del.
Tarver, Thos. H., 224 Orndorff Dr., El Paso, Tex.
Teberg, D. E., 1333 Franklin St., Bellevue, Nebr.
Terry, Frank E., 11th AAA AW Bn., Ft. Lewis, Wash.
Test, Wm. D., 357 Webster Ave., Elmhurst, Ill.
Terzian, E. J., 300 Stanford Ave., Menlo Park, Calif.
Timeson, N. I., Dutch Village, Menanda, N. Y.
Todd, James C., 19th AAA Gp., Ft. Meade, Md.
Traver, Cory P., 2335 Wisconsin Ave., Milwaukee, Wisc.
Treu, Wm. L., 617 Woodside Pl., Webster Groves 19, Mo.
Trussell, J. B. B., Jr., 418 The Esplanade, Hackensack, N. J.
Twiggs, Albert J., 1011 Meigs St., Augusta, Ga.
Twitchell, R. M., Ft. Sill Exchange, Ft. Sill, Okla.
Twomey, L. A., Qtrs. 90-A, Presidio of Monterey, Calif.
Tysko, S. O., 7926 Ramsgate Ave., Los Angeles 45, Calif.
Unterguber, R. T., 604 S. High St., Harrisonburg, Va.
Urbach, Robt. G., 1311 Grove Ave., Richmond, Va.
Van Exel, Otho C., 1063 Sterling Pl., Brooklyn 13, N. Y.
Van Fleet, Henry B., 1647 Kent St., Columbus, Ohio.
Van Gundy, D. F., Box 134, Ft. Sill, Okla.
Vaughn, F. M., Box 7, Ft. Bliss, Tex.
Vesoloski, J. J., 434 Thompson St., Stratford, Conn.
Wadsworth, C. Q., 1st GM Regt., White Sands Proving Grounds, Las Cruces, N. M.
Walker, Norman M., State Armory, Berlin, N. H.
Wallis, John P., 62 Tate St., Elberton, Ga.
Walmer, Richard, 933d AAA AW Bn., APO 704, c/o PM, San Francisco, Calif.
Walsh, Thos. J., 4th AAA AW Bn., Ft. Meade, Md.
Ward, J. A., Jr., 2906 W. Clay St., Richmond 21, Va.
Watson, A. C., 2803 Erie St., S.E., Washington 20, D. C.
Watson, R. O., Hq., 260th AAA Gp., Cp. Edwards, Mass.
Watson, Ronald, SOCTAS, Ft. Knox, Ky.
Watson, Wm. W., Box 12, Ft. Bliss, Tex.
Weltmer, Noyes, Jr., 5th AAA AW Bn., Ft. Sheridan, Ill.
Whitaker, E. H., 1404 B St., Lawton, Okla.
White, Howard S., 6700 Lake St., Falls Church, Va.
Wickersham, C. L., Box 429, Washington, Ga.
Wiegand, J. A., 559 Bloomfield Ave., Montclair, N. J.
Wiggs, John H., 65th AAA Gp., Ft. Clayton, Canal Zone.
Wilde, H. B., Box 537, Huntsville, Ala.
Williams, D. B., Qtrs. 238, Ft. Bliss, Tex.
Williams, W. J., OACOFS, G-3, The Pentagon, Washington 25, D. C.
Wilson, Paul F., Dept. of Gunnery, Ft. Bliss, Tex.

Wilson, R. J., Dept. Ext. Courses, TAS, Ft. Sill, Okla.
Wilson, Simeon, 3221 W. Division St., Chicago, Ill.
Wingard, B. F., Box 272, Dillon, S. C.
Winstead, E. D., 1204th ASU, N.Y. & N.J. Sub Area, Ft. Totten, N. Y.
Withum, John F., 1810 Maple St., Munhall, Pa.
Witt, E. C., Jr., D.C. NG Armory, 2001 E. Capitol St., Washington D. C.
Wood, David M., 4143 Southwestern, Houston 5, Tex.
Wood, Frederick M., 19 Pearl St., Concord, N. H.
Wood, Harland G., 4632 S. 31st Rd., Arlington, Va.
Wood, Oliver E., 401 Lexington Dr., Silver Spring, Md.
Woodruff, J. Y., 960 E. 223d St., New York, N. Y.
Worley, T. G., Dept. of Ext. Courses, Ft. Sill, Okla.
Wright, Bertram C., Mil. Dept., UCLA, Los Angeles, Calif.
Wylie, F. B., University Station, Knoxville, Tenn.
Yanisch, O. F., 7780th OMGUS Gp., Bavaria Sect., APO 407-A, c/o PM, New York, N. Y.
Yarborough, N. A., Office of Sr. Instr, NOPE, New Orleans, La.
Young, Claude C., University of Pennsylvania, Philadelphia, Pa.

CAPTAINS

Abel, C. R., 2602 E. Garfield, Albuquerque, N. M.
Abbott, G. C., 4208 Kecoughtan Rd., Hampton, Va.
Adolphson, J. F., 5000 Pennsylvania Ave., St. Louis 11, Mo.
Akley, H. L., 230 Palmer Ave., Larchmont, N. Y.
Alacam, Fethi, AA & GM Br., TAS, Ft. Bliss, Tex.
Alexander, D. B., 4863 Terrace Dr., Seattle, Wash
Allen, S. C., Hq., 40th AAA Brigade, APO 503, c/o PM, San Francisco, Calif.
Amende, Jas. K., G-4, Hq., JLC, APO 393, c/o PM, San Francisco, Calif.
Anderson, G. K., 2477th ASU, University of Delaware, Newark, Del.
Anderson, I. B., 106 Custis Ave., Woodcrest, Wilmington, Del.
Anderson, J. C., Box 2, Quarry Heights, Canal Zone.
Andrews, E. N., 49 Oakwood Ave., Rye, N. Y.
Angier, J. F., 239 Maple Ave., Takoma Park, Md.
Appleby, Robert C., 647 Schwartz St., Green Bay, Wis.
Aquilina, R. F., 40th AAA Brigade, APO 503, c/o PM, San Francisco, Calif.
Ashe, O. J., 3556 Wabash Ave., Cincinnati, Ohio.
Aurand, Paul B., 2366 Fifth Ave., New York 35, N. Y.
Austin, C. F., 116 Monument St., West Medford, Mass.
Austin, J. A., Jr., Box 1751, High Point, N. C.
Babb, Leo D., 88th Abn AA Bn., Cp. Campbell, Ky.
Badey, William, Hq., West. AAAC, Hamilton AFB, Calif.
Badura, S. J., 4304 W. Iowa St., Chicago, Ill.
Bailey, W. L., Inwood Rd., RFD 7, Pittsburgh 29, Pa.
Baisinger, D. H., 1304 S.E. 48th Ave., Portland 15, Ore.
Baker, G. A., 40th AAA Brigade, APO 503, c/o PM, San Francisco, Calif.
Baker, M. C., 252 St. Matthews St., Green Bay, Wis.
Baker, R. W., 63d AAA AW Bn., Ft. Bliss, Tex.
Barbee, R. C., 4th AAA AW Bn., Mt. Meade, Md.
Barboza, P. F., 960 E. 223d St., New York, N. Y.
Barnwell, C. B., York, S. C.
Barth, E. G., 7333 Piney Branch Rd., Takoma Park, Md.
Barth, Lester, 215-37 43d Ave., Bayside, L. I., N. Y.
Beam, B. T., 30th AAA AW Bn., Ft. Custer, Mich.
Beattie, S. W., Box 384, Red Wing, Minn.
Beaumont, John, 53 Francis Ave., Harrison, N. Y.
Beauseau, J. S., Ravenswood, W. Va.
Beazley, L. K., 3162 Tennsyon St., N.W., Washington 15, D. C.
Beck, C. A., 1613 19th St., S.E., Washington 20, D. C.
Behr, G. T., 327 Spencer Rd., Rochester, N. Y.
Bell, H. S., Jr., PO Box 535, Elberton, Ga.
Belote, J. N., Jr., Market Street Armory, Onancock, Va.
Benchich, J. J., 32115 Genesee St., Wayne, Mich.
Beneshan, W. A., 305 South Ave., Poughkeepsie, N. Y.
Benford, T. E., 2029 Breuning, Ferndale 20, Mich.
Benner, J. D., 69th AAA Gun Bn., Ft. Bliss, Tex.
Bennett, C. C., Jr., 1421 Pierce St., Birmingham, Mich.
Bennett, G. E., 79th AAA Gun Bn., Ft. Custer, Mich.
Bergsten, Robert, 2812 Grant Ave., El Paso, Tex.
Bergquist, A. J., Box 650, Rt. 1, Homestead, Pa.
Beuck, R. F., 216 S. Depeyster St., Kent, Ohio.
Bigger, W. K., PO Box 652, Ft. Clayton, Canal Zone.
Billman, A. B., 71st AAA Gun Bn., Ft. Belvoir, Va.
Birnley, F. W., 64th AAA Gun Bn., APO 994, c/o PM, San Francisco, Calif.
Bishop, W. A., 530 Falstaff Rd., Rochester, N. Y.
Blacher, Oscar, 290 Terrace, Buffalo 2, N. Y.
Blackman, W. D., Box 96, Cedar Grove, N. J.
Blalock, H. F., 506 S. Adair St., Clinton, S. C.
Bland, R. A., Box 11, Charlotte, N. C.
Blankley, W. E., 323 Park Ave., Newark 7, N. J.
Blum, Milton, 75 Cliff St., New York 7, N. Y.
Bond, J. B., 1816 N. 22d St., Lawton, Okla.
Bookter, E. F., 507th Op. Det., APO 331, c/o PM, San Francisco, Calif.
Booth, Arthur, 734 Hancock St., Brooklyn, N. Y.
Botts, Harry, 307 Payne Rd., Pensacola, Fla.
Bouis, P. J., 3915 Clematis St., New Orleans, La.
Bouknight, J. R., 1409 Drayton St., Newberry, S. C.
Boyd, J. E., 620 Reynolds Ave., El Paso, Tex.
Boyle, J. R., 23831 Lloyd Ct., Dearborn, Mich.
Brann, D. D., 515 Madison Ave., New York 22, N. Y.
Brannan, W. E., Chipley, Fla.
Braun, J. H., Btry. E, 1st GM Regt., China Lake, Calif.
Brennfleck, J. B., 260 McAllister St., San Francisco, Calif.
Breslin, Thos. P., 101-F Stadium Pl., New Orleans, La.
Breuning, E. G., 5045 W. Fulton St., Chicago, Ill.
Bridge, E. W., 3014 S. Columbus St., Arlington, Va.
Brinkwart, Hugo, Jr., Hq., Sep. & Re-asgmt. Br., Cp. Kilmer, New Brunswick, N. J.
Broad, J. H., 461 Burns Dr., Detroit 14, Mich.
Broderick, H. F., 671 Eureka Ave., Lodi, Calif.
Brokaw, N. A., RR 10, Box 359-N, Cincinnati 27, Ohio.
Broudy, Harold, Qtrs. 1050-B, Ft. Bliss, Tex.
Brown, Cameron, Spring Valley Rd., Ossining, N. Y.
Brown, Cecil J., Btry. D, 867th AAA AW Bn.-M, APO 942, c/o PM, Seattle, Wash.
Brown, Chas. B., Hq., Btry., 76th AAA AW Bn., APO 323, c/o PM, San Francisco, Calif.
Brown, Ernest A., Hq., 4th AAA AW Bn.-M, Ft. Meade, Md.
Brown, Francis A., PO Box 374, Calais, Maine.
Brown, John S., 1626 Sedawick Ave., Bronx 53, N. Y.
Browne, E. W., Jr., 8504 Irvington Ave., Bethesda, Md.
Brownlee, J. I., Jr., Marianna, Fla.
Brundage, F. W., 2259 Tipperary Rd., Kalamazoo 40, Mich.
Bruno, N. J., 504th AAA Gun Bn. Hq., Ft. Custer, Mich.
Buchbinder, Raymond, 2001 E. 9th St., Brooklyn 23, N. Y.
Buchler, Edw., 5031 N. Nashville, Chicago 31, Ill.
Buckley, J. L., 5501 4th St., N.W., Washington, D. C.
Burger, L. J., Hq. & Hq. Co., 60th Inf. Regt., Ft. Dix, N. J.
Burrows, L. A., 89 Kirk Dr., Rochester 10, N. Y.
Burt, Wm. A., 753d AAA Gun Bn., APO 919, c/o PM, San Francisco, Calif.
Burton, L. R., 1110 Ash St., Lawton, Okla.
Cahill, M. J., 29 Mistletoe Rd., Levitton, L. I., N. Y.
Cairncross, R. L., Jr., 753d AAA Gun Bn., APO 919, c/o PM, San Francisco, Calif.
Caldwell, Edw. G., 105 14th Ave., Dillon, S. C.
Calhoun, A. R., 18962 Edinborough Rd., Detroit 19, Mich.
Callahan, P. P., 1320 Columbia Ave., Chicago, Ill.
Cameron, H. S., 3576 N.E. Bryce St., Portland, Ore.
Cameron, Wm. J., Dutch Village, Menanda, N. Y.
Campbell, Merle E., Hq. & Hq. Btry., 4th AAA AW Bn., Ft. Meade, Md.
Canfield, R. G., 1641 Noble Ave., Bridgeport, Conn.
Cannon, J. E., 314 W. Palmetto St., Florence, S. C.
Card, Roy B., Hq., 95th AAA Gun Bn., Ft. Lewis, Wash.
Carnrick, Geo. W., 26 Bowers Rd., Caldwell, N. J.
Carson, T. M., Hq., Eastern AAAC, Stewart AFB, Newburgh, N. Y.
Carter, Edw. B., 23 N. Rodney Dr., Edgemoor Gardens, Wilmington, Del.
Carter, N. C., 1004 S. Jennings, Bartlesville, Okla.
Carter, Roy C., Jr., 1139 9th St., Berkeley, Calif.
Caruso, P. A., Box 184, Dunbar, Pa.
Casement, Wm., Jr., Sedan, Kan.
Casscells, K. J., 188 Bard Ave., Staten Island 1, N. Y.
Chaquette, L. T., 443d AAA AW Bn., Ft. Devens, Mass.
Chastain, D. R., Btry. D, 678th AAA AW Bn., Williamston, S. C.
Chavez, J. R., 215 E. Seventh, Bartlesville, Okla.
Childress, H. J., Jr., 104 Handy Circle, El Paso, Tex.
Christ, Jos. P., 4653 N. 5th St., Philadelphia, Pa.
Christenson, P. A., Bloomington Ferry, Rt. 4, c/o Guthrie, Minneapolis 20, Minn.
Churas, F. A., Box 206, Franklin, N. H.
Chuvala, A. T., 209 Hillcrest Ave., Benicia, Calif.
Cichon, J. J., 1916 S. Spaulding Ave., Chicago 23, Ill.
Clark, A. V., Army Educ. Cen., Yokohama Comd., APO 503, c/o PM, San Francisco, Calif.
Clark, Alton C., Box 713, Anderson, S. C.
Clark, Robt. W., Hq. Btry., 59th AAA AW Bn.-SP, Ft. Bliss, Tex.
Clark, Wm. L., 19 Castello Ave., Parkmerced, San Francisco, Calif.
Cloke, T. H., Jr., 1148 Pleasant Ave., Oak Park, Ill.
Coble, Jay C., 625 N. Church St., Burlington, N. C.
Cochran, J. B., 182d AAA Gun Bn., Ohio NG, Box 487, Middletown, Ohio.
Coffin, Edw. J., 443d AAA AW Bn., Ft. Devens, Mass.
Coggins, S. M., Hq., 31st AAA Brigade, Ft. Lewis, Wash.
Colbert, Edw. F., 52 Flint St., Salem, Mass.
Cole, F. W., Armory, Klamath Falls, Ore.
Cole, Gordon T., 74 Arrowhead Dr., Rochester, N. Y.
Cole, Thos. J., Hq. Btry., 39th AAA AW Bn.-M, Ft. Meade, Md.
Colo, F. W., 1900 Worden St., Klamath Falls, Ore.
Combs, Reed, 202 S. Broad St., Middletown, Del.
Conlyn, Robt. M., 1936 35th St., N.W., Washington, D. C.
Coonly, W. J., Jr., 4001st ASU, BOQ 243, Rm. 13, Ft. Bliss, Tex.
Cooper, Henry R., 95th AAA Gun Bn., Qtrs. 3408-B, Ft. Lewis, Wash.
Cope, Ralph H., Hq., 97th AAA Group, APO 331, c/o PM, San Francisco, Calif.
Copeland, R. T., Hq., 65th AAA Gun Bn., APO 331, c/o PM, San Francisco, Calif.

Coppola, W. M., 77 Glenbrook Rd., Stamford, Conn.
Corcoran, Frank, 613 Wood St., Coraopolis, Pa.
Cotter, A. E., 51 St. Charles St., West Hartford, Conn.
Counts, J. W., 1607 Nance St., Newberry, S. C.
Cox, John S., 365 Birch St., Jacksonville, Fla.
Cox, Richard F., 75th AAA Gun Bn., Ft. Meade, Md.
Crane, M. E., Box 233, Fonda, N. Y.
Crawford, Chas. D., 71st AAA Gun Bn., Ft. Belvoir, Va.
Crayton, J. B., Jr., Box 713, Anderson, S. C.
Crigler, Thos. H., 825 7th Ave., N., Columbus, Miss.
Croneborg, R., 2123 Le Roy Pl., N.W., Washington 8, D. C.
Cubberley, Robt. T., RD 2, Lambertville, N. J.
Cummings, John W., 345 N. Main St., Fall River, Mass.
Cushing, L. W., Btry. D, 450th AAA AW Bn., Ft. Bliss, Tex.
Czarnecki, S. S., 10 Skillman Ave., Jersey City, N. J.
Dando, R. R., Jr., Ofc. Sr. Army Instr. 2726 Anderson Dr., Raleigh, N. C.
Dane, Wm. R., 116 S. Callow Ave., Bremerton, Wash.
Danfelt, E. D., 465 Western Ave., Albany, N. Y.
Daniels, J. E., Btry. B, 867th AAA AW, Bn.-M, APO 942, c/o PM, Seattle, Wash.
Daugherty, Wm. R., 428 Oakland Ave., Pittsburgh 13, Pa.
David, Robt. E., Box 427, Camden, S. C.
Davis, Harry V., Hq., 62d AAA AW Bn.-SP, Ft. Hood, Tex.
Davis, Paul A., 88th Abn. AA Bn., Ft. Campbell, Ky.
Day, V. K., 1311 E. Yonge St., Pensacola, Fla.
Day, Wm. G., 443d AAA AW Bn., Ft. Bliss, Tex.
Deemer, E. L., 4021 Gifford Ave., Cleveland, Ohio.
DeFlorin, H. E., 8344 Delaware Ave., Jacksonville, Fla.
DeFranco, Theo. J., Btry. B, 59th AAA AW Bn.-SP., Ft. Bliss, Tex.
DeLeon, E. F., Keppler Farm, Enterprise, Ore.
Denny, J. E., 391 Emerson Pl., Uniondale, N. Y.
Denson, W. S., 3908 Liberty Heights Ave., Baltimore 7, Md.
Dent, Burney, 1328 Ryder St., Vallejo, Calif.
DePass, M. M., 507 Carolina Ave., Isle of Palms, S. C.
Detwiler, R. T., 8104th Sv. Det., G-3, APO 331, c/o PM, San Francisco, Calif.
Dibble, R. L., 535 Oakmoor Ave., Bay Village, Ohio.
Dickerman, C C., 15831 Marlowe, Detroit 27, Mich.
Dickson, Lon R., 71st AAA Gun Bn., Ft. Belvoir, Va.
Diediker, V. W., 2119 Hillcrest Dr., Redwood City, Calif.
Diez, J. R., Jr., 2200 Hayes St., San Francisco, Calif.
Dillon, Gregory M., Hq., 736th AAA Gun Bn., Cp. Gordon, Ga.
Dito, J. P., 1922 45th Ave., San Francisco 16, Calif.
Dixon, Wm. R., 504½ W. Kennewick Ave., Kennewick, Wash.
Doane, Don L., 323 S. Princeton Ave., Albuquerque, N. M.
Doe, Norman H., 68 Roxborough Rd., Rochester, N. Y.
Dolan, Wm. N., 207 Lexington Ave., Providence, R. I.
Doody, R. E., 145 Culver Rd., Rochester 20, N. Y.
Dooley, Wm. J., Hq. Btry., 50th AAA AW Bn.-SP, Ft. Bliss, Tex.
Dorohkov, M. N., 2552 Belmont Rd., N.W., Washington, D. C.
Dorrough, T. A., Hq., 22d AAA AW Bn., APO 331, c/o PM, San Francisco, Calif.
Dorsey, Alec, Hq., 503d Abn. AA Bn., Ft. Bragg, N. C.
Dougherty, H. S., Hq., 10th AAA Group, Ft. Lewis, Wash.
Douglas, D. E., 2033 N.E. Thompson St., Portland, Ore.
Douglass, W. E., 717 Anneslie Rd., Baltimore 12, Md.
Dowling, J. B., Qtrs. 15-A, Ft. Worden, Wash.
Downer, Wm. V., Mil. Sc. Dept., Kansas State College, Manhattan, Kan.
Doyle, H. L., 12 Whipple Ave., Cranston, R. I.
Drake, Wm. G., 20 Santa Clara Ave., San Francisco 16, Calif.
Drury, Wm. N., 5613 N. Winthrop, Chicago, Ill.
Dryfoos, Hugh, 505 Carroll St., Brooklyn 15, N. Y.
Dugan, Edw. F., Btry. D, 95th AAA Gun Bn., Ft. Lewis, Wash.
Dumestre, C. J., Jr., 827 Louisiana Ave., New Orleans, La.
Dunn, F. L., 2535 Somerset Dr., Kansas City 5, Mo.
Dunnahoo, Jack R., 443d AAA AW Bn., Ft. Devens, Mass.
Dunson, N. B., Btry. B, 76th AAA AW Bn., APO 323, c/o PM, San Francisco, Calif.
Durham, John D., 2 Roselle Ave., Pleasantville, N. Y.
Duvall, Wm. E., Jr., 409 Church St., Cheraw, S. C.
Dye, Robt. F., Apt. 49, Bldg. 5, Callaway Apts., 251 10th St., N.W., Atlanta, Ga.
Dyer, Eph, Jr., 155 N. Michigan Ave., Pasadena, Calif.
Eddy, W. W., 1411½ Calumet Ave., Los Angeles 26, Calif.
Edwards, Dave W., Brty. C, 95th AAA AW Bn., Ft. Lewis, Wash.
Eggert, F. W., Jr., 718 E. 236th St., New York 66, N. Y.
Ellis, Edwin F., 1025 Chartiers Ave., Pittsburgh 20, Pa.
Emery, Earl E., Hq., 62d AAA AW Bn.-SP, Ft. Hood, Tex.
Emmerich, Geo. M., 6650 Bock Rd., S. E., Washington 20, D. C.
England, L. C., 8 Greenwood Ave., Rumford, R. I.
Enkio, S. L., 1900 24th St., Washington 8, D. C.
Erdman, Geo. W., Box 636, AA & GM Br., TAS, Ft. Bliss, Tex.
Erikson, E. E., 170 Avenue "A," Shanks Village, Orangeburg, N. Y.
Erwin, Roy C., Btry. B, 69th AAA Gun Bn.-M, Ft. Devens, Mass.
Evasick, H. E., 11 Fenway N., Milford, Conn.
Ewing, J. K., 24th HAA Regt., RCA, Trail Armouries, Trail B. C., Canada.
Fadden, V. J., 776 Cromwell Ave., St. Paul 4, Minn.
Farley, A. W., Jr., Hq., 40th AAA Brigade, APO 503, c/o PM, San Francisco, Calif.
Farley, R. F., 85-04 253d St., Bellrose, L. I., N. Y.
Farra, John S., Hq., 35th AAA Brigade, Ft. Meade, Md.
Fay, R. J., 3295 West Blvd., Cleveland 11, Ohio.
Fedosi, Alec L., Hq. Btry., 69th AAA Gun Bn.-M, Ft. Bliss, Tex.
Fenniman, A. A., Jr., 80 John St., Rm. 1607, New York, N. Y.
Ferdon, Donald C., 601 79th St., Brooklyn 9, N. Y.
Field, J. H., Jr., 803 McCabe Ave., Baltimore 12, Md.
Fink, R. A., D Btry, 50th AAA AW Bn.-SP, Ft. Bliss, Tex.
Fischer, E. F., 9400 Saybrook Ave., Silver Spring, Md.
Fisken, A. D., Jr., Hamilton AFB, Hq., Western AAAC, San Rafael, Calif.
Fitzgerald, E. J., 801 West-End Ave., New York 25, N. Y.
Fitzgerald, John, 37-D Picotte Dr., Albany, N. Y.
Fjelstad, R. E., 240 W. 13th, Tulsa, Okla.
Flaherty, Gerald H., 2309 W. 1st St., Kennewick, Wash.
Fogler, H. H., 86 Wyndham Rd., Rochester 12, N. Y.
Fonde, John P., Hq., 226th AAA Gp., Ft. Bliss, Tex.
Fore, W. C., Lamar St., Latta, S. C.
Fox, Gabriel, 1122d ASU, Boston Army Base, Boston 10, Mass.
Fox, Wm. M., 2005 W. 3d St., Kennewick, Wash.
Francis, O. J., 443d AAA AW Bn., Ft. Devens, Mass.
Franklin, Geo. H., Hq., 21st AAA AW Bn.-SP, Ft. Bliss, Tex.
Franklin, Geo. W., Btry. B, 21st AAA AW Bn.-SP, Ft. Bliss, Tex.
Fredricksen, A. E., 443d AAA AW Bn., Ft. Devens, Mass.
Friddle, H. E., 411 Pomona Ave., Coronado, Calif.
Frohock, W. E., Jr., 259 Princeton St., Hartford, Conn.
Fuller, G. D., Lordsburg, N. M.
Furth, S. M., 8209 Blackstone Ave., Chicago 19, Ill.
Gabel, Austin, Hq., 213th AAA Gun Bn., Ft. Bliss, Tex.
Gabriel, Jas. S., Hq., 216th AAA Gp., Cp. Gordon, Ga.
Gadler, Herman J., 379th AAA Bn., 709 Pence Bldg., Minneapolis 3, Minn.
Gaines, Geo. A., 225 Heard St., Elberton, Ga.
Gallagher, T. R., 209 E. Mississippi Ave., S.E., Washington, D. C.
Gallant, F. X., Hq. & Hq. Btry., 68th AAA Gun Bn., Ft. Lewis, Wash.
Gallaway, A. S., Liberty St., Washington, Ga.
Galloway, J. C., Box 5147, Five Points Station, Columbia, S. C.
Garcia, Herman, 6739 Roeblin Ct., San Diego 11, Calif.
Garcia, Obaldo, 64th AAA Gun Bn., Btry. C, APO 994, c/o PM, San Francisco, Calif.
Gardiner, S. K., 3513 Casanova Lane, San Mateo, Calif.
Gay, Travis R., 4310 35th St., San Diego 4, Calif.
Geehan, B. T., 5404th ASU, ROTC Det., Michigan State College, East Lansing, Mich.
Gehrke, Robt. E., 25 Belvedere St., San Francisco, Calif.
Geissinger, C. B., 62d AAA AW Bn.-SP, Ft. Hood, Tex.
Genero, Peter P., 70th AAA Gun Bn., Ft. Meade, Md.
Gerig, Fred L., Btry. C, 97th AAA Gun Bn., APO 323, c/o PM, San Francisco, Calif.
Gernon, Richard W., Btry. D, 96th AAA Gun Bn., Ft. Bliss, Tex.
Gershon, G. M., AA & GM Br., TAS, Ft. Bliss, Tex.
Gettinger, C. E., RFD 2, Box 299, Naperville, Ill.
Gibson, Paul L., A-1st AAA Trng. Bn., Ft. Bliss, Tex.
Gilbert, Edw. N., 9 Wayland Ct., Milford, Conn.
Gilmore, H. H., Jr., 223 Forest Hills Dr., Wilmington, N. C.
Gipson, L., 395 Putnam Ave., Brooklyn, N. Y.
Gjertsen, A. R., 1649 W. Juneway Terrace, Chicago 26, Ill.
Glover, C. L., Jr., 53 S. Cannon Dr., Edgemoor Gardens, Wilmington, Del.
Gluch, J. J., Btry. A, 865th AAA AW Bn., APO 7, c/o PM, San Francisco, Calif.
Goedthe, N. M., 276 Chase St., Gary, Ind.
Gondos, Victor, Jr., Rm. DC-6, National Archives, Washington, D. C.
Gorman, C. J., Rm. 708, Bank of Manhattan Bldg., Long Island City, N. Y.
Gorman, D. F., 4 Massachusetts Ave., New Britain, Conn.
Gossett, Henry M., Mil. Dept., The Citadel, Charleston, S. C.
Grace, R. E., 406 Strawbridge Ave., Westmont, N. J.
Grady, Wm. G., 52 Chamberlain Ave., Revere 51, Mass.
Grant, Chas. E., Hq., 212th AAA Group, N.Y. NG, 120 W. 62d St., New York 23, N. Y.
Grant, J. W., 3107 N. Piedras Dr., El Paso, Tex.
Gray, Harry A., Btry. B, 34th AAA AW Bn.-SP, Ft. Bliss, Tex.
Grasty, H. L., Orange, Va.
Gray, J. G., Hq., 118th AAA Group, 51 Wellington Rd., Ardmore, Pa.
Green, Julius S., 65th AAA Gun Bn., APO 331, c/o PM, San Francisco, Calif.
Greenspun, L., Box 596, Devon, Pa.

Grieg, V. D., Rt. 7, Box 191, Salem, Ore.
Griepp, F. R., 75th AAA Gun Bn., Ft. Meade, Md.
Griffith, W. C., 218 Bentwood Ave., Johnstown, Pa.
Grogan, John F., Hq. Btry., 519th AAA Gun Bn., Ft. Bliss, Tex.
Guertin, Sabin W., Canterbury, N. H.
Guglielmino, S. P., 670 34th Ave., San Francisco 11, Calif.
Guitian, A., Spanish Nav. Att., 2700 15th St., N.W., Washington, D. C.
Gwinner, H. H., Btry. B, 62d AAA AW Bn.-SP, Ft. Hood, Tex.
Haddon, M. C., 14416 S. Parnell, Chicago 37, Ill.
Hage, Russell E., 1544 Ridge Ave., Muskegon, Mich.
Hagebuch, J. J., 262 Belmont St., Watertown 72, Mass.
Hall, Edw. M., 1419 Henry St., Berkeley 9, Calif.
Hall, Frank S., 10 Chapel St., Harrisville, R. I.
Halliday, Michael, IG Sec., Hq., Yokohama Comd., APO 503, c/o PM, San Francisco, Calif.
Halsey, B. P., 2346 Broadway, Redwood City, Calif.
Hamilton, R. B., 4325 Bliss St., El Paso, Tex.
Hampton, Rex H., OMA, Navy 100, c/o FPO, New York, N. Y.
Hand, B. C., 1724 Pine St., Philadelphia 3, Pa.
Hansen, Henry M., 55 Learned St., New London, Conn.
Haring, David P., 1931 Orrington Ave., Evanston, Ill.
Harney, B., 1903 E. 4th St., Spokane 15, Wash.
Harper, J. R., 120 W. 123d St., Apt. 94, New York 27, N. Y.
Harris, K. D., PO Box 561, Lancaster, S. C.
Harris, N. W., Va. Elec. & Power Co., South Boston, Va.
Hart, Wm. J., 58-14 41st Ave., Woodside, L. I., N. Y.
Hartman, P. E., Jr., RR 3, Box 532, Battle Creek, Mich.
Hartt, D. N., Jr., 145 Culver Rd., Rochester 20, N. Y.
Hartwig, H. H., Hq. Btry., 867th AAA AW Bn., APO 942, c/o PM, Seattle, Wash.
Haskins, C. A., 927 Bartholomew St., New Orleans, La.
Hatch, Donald L., 197 E. Robbins Ave., Newington, Conn.
Haughton, R. E., 1712 Columbia Ave., Lawton, Okla.
Heimer, Gerard, 31st AAA Brigade, Ft. Lewis, Wash.
Henderson, J. W., Mayer Ave., Newberry, S. C.
Henderson, Robt., Jr., 242 Beverly Dr., New Orleans, La.
Hendren, K. H., Ofc. Army Instr., 118th AAA Group, 32d & Lancaster, Philadelphia 4, Pa.
Hendrickson, R. A., 5693 New Hampshire, Chicago, Ill.
Herbring, Wm., 2427 N.E. Mason St., Portland 11, Ore.
Herr, E. D., Forest, La.
Herren, J. C., Box 744, AA & GM Br., TAS, Ft. Bliss, Tex.
Hesketh, Wm. N., 194 Whittington Rd., Rochester, N. Y.
Hess, F. S., 411 E. 53d St., New York 22, N. Y.
Hesser, W. F., AFF Bd. No. 4, Ft. Bliss, Tex.
Hewitt, R. A., Btry. A, 870th AAA AW Bn., 2366 Fifth Ave., New York, N. Y.
Heyburn, H. B., The Heyburn Bldg. Co., 1407 Heyburn Bldg., Louisville 2, Ky.
Hiebler, T. E., 45 Mareeta Rd., Rochester, N. Y.
Hiles, John C., Btry. B, 11th AAA AW Bn., Ft. Lewis, Wash.
Hill, Benj. I., AFF Bd. No. 4, Ft. Bliss, Tex.
Hoddinott, Geo. R., COAC No. 1, Stu. Det. "C," 4050th ASU, Ft. Sill, Okla.
Hodge, Wm. L., Hq., 11th AAA AW Bn.-SP, Ft. Lewis, Wash.
Hofstatter, F. W., 2211 Garfias Dr., Pasadena 9, Calif.
Holberton, W. E., 244-B Thomas Dr., Monroe Park, Wilmington, Del.
Holder, J. M., Hq., 65th AAA Gun Bn., APO 331, c/o PM, San Francisco, Calif.
Holman, Gerald C., PO Box 1301, Pensacola, Fla.
Hope, Chas. P., Jr., RFD 1, Abingdon, Va.
Hopkins, John R., Apt. D-1, 99 Peachtree Memorial Dr., Atlanta, Ga.
Hoppe, R. M., 56 Cherry Rd., Rochester 12, N. Y.
Hoppe, W. C., 677 Wilson St., Winona, Minn.
Horneij, E. H., State Armory, 37 Coit St., New London, Conn.
Horton, K. G., 2220 Pacific Ave., Aberdeen, Wash.
Horton, LeRoy, Jr., 341 Hawthorn, Glen Ellyn, Ill.
Hotvet, W. B., Box 152, Belmond, Iowa.
Howell, J. A., Jr., 129 Pender St., Suffolk, Va.
Huff, Harold W., 2222 W. 106th St., Chicago 13, Ill.
Hufstetler, J. R., 30th AAA AW Bn., Ft. Custer, Mich.
Hughes, Gordon, 307 Blakely Rd., San Antonio 9, Tex.
Hulsizer, F. W., 317 W. 9th, Apt. 5, Tulsa, Okla.
Hultgren, R. A., 117 W. 57th St., New York 19, N. Y.
Hundhausen, G. H., 3037 Ashfiled Lane, San Diego, Calif.
Hunt, James M., Box 710, Elberton, Ga.
Hurney, J. H., 4 Harvard Ave., Dorchester 21, Mass.
Hutchins, L. W., 929 Belleforte Ave., Oak Park, Ill.
Hutchinson, J. A., Jr., Waynesboro, Ga.
Igersheimer, Milo, Qtrs. 417, Ft. Bliss, Tex.
Ingle, David, Jr., 3919 Washington Ave., Evansville, Ind.
Ingram, H. B., Lewes, Del.
Isaachsen, Robt., 1627 Summerdale, Chicago 40, Ill.
Isham, O. A., Hq. 69th AAA Gun Bn.-M, Ft. Bliss, Tex.
Israelson, N. H., 62d AAA AW Bn.-SP, Ft. Hood, Tex.
Jacobson, J. W., Hq., 96th AAA Gun Bn., APO 942, c/o PM, Seattle, Wash.
Jahnke, K. E., Box 178, Hillsboro, Ind.
James, Melvin E., 5 Veazey St., Charleston 1, W. Va.
Jansen, F. J., 213 S. Judson, Tacoma, Wash.
Jemmott, A. H., Jr., Hq., 79th AAA Gun Bn.-120mm, Ft. Custer, Mich.
Jensen, F. T., 1533 Rosewick Ave., Baltimore 6, Md.
John, R. C., 3500 Nebraska Ave., N.W., Washington 16, D. C.
Johnsen, Russell H., 4227 Liberty St., San Diego, Calif.
Johnson, Melvin L., Hq., 11th AAA AW Bn.-SP, Ft. Lewis, Wash.
Johnson, Robt. E., Jr., 2617 Haste St., Berkeley, Calif.
Johnson, W. S., 600 S. Cherokee, Bartlesville, Okla.
Jones, Lee G., 5513 Grace St., El Paso, Tex.
Jones, R. A., 1826 Audubon St., New Orleans, La.
Jones, Remus L., 1218 W. 7th Ave., Corsicana, Tex.
Jones, Wm. H., N. Second St., Seneca, S. C.
Jordan, H. E., 405 N. 16th Ave., Pensacola, Fla.
Kajencki, F. C., 3800 Mountain Ave., El Paso, Tex.
Kane, Frank R., Jr., Hq., 68th AAA Group, APO 942, c/o PM, Seattle, Wash.
Kearney, P. J., 19 Pearl St., San Francisco, Calif.
Keenan, W. E., 545 Ridge Rd., Wethersfield, Conn.
Kelly, A. Roger, 1 Hawthorne Pl., Nyack, N. Y.
Kelly, J. P., Jr., 102d AAA Brigade, N.Y. NG, 3250 Perry Ave., Bronx 67, N. Y.
Kelly, R. B., Jr., 715 S. Flower St., Santa Ana, Calif.
Kelsey, David, Box 5664, Chicago 80, Ill.
Kenan, Jas. S., Statesboro, Ga.
Kennedy, D. H., 2329 Main St., Hartford, Conn.
Kennedy, Wm. D., Jr., Hq., 22d AAA Group, Ft. Custer, Mich.
Kenney, A. W. Geo., 103 Guion Pl., Apt. 2, New Rochelle, N. Y.
Kershaw, Rostron, 17 Subway Ave., Chelmsford, Mass.
Kerwin, W. J., 2232 Washington Ave., Silver Spring, Md.
Kilbourne, J. C. (Ret), 1460 Cortez Ave., Burlingame, Calif.
Kimball, F. M., 514 Pleasant St., Charlotte, Mich.
King, Eugene H., 50 Lancaster Rd., West Hartford, Conn.
Kingsley, E. H., 5326 N. Winthrop Ave., Chicago 40, Ill.
Kirk, A. C., 408 Briar Pl., Chicago 14, Ill.
Kissam, R. V., Jr., AOAC No. 1, 4050th ASU, Stu. Det. "C," Ft. Sill, Okla.
Klepacl, M. V., 66 Clinton St., New Britain, Conn.
Klon, F. P., 3406 S. 22d St., Milwaukee 15, Wisc.
Knapp, K. J., Jr., TIS, Hist. Sec., GHQ, FEC, APO 500, c/o PM, San Francisco, Calif.
Knapp, Vincent E., 624 E. 20th St., New York 9, N. Y.
Knarr, F. E., Clyde Rd., Box 503, Montgomery County, Bryn Mawr, Pa.
Knight, J. B., 29 Putnam Ave., Apt. 2-B, Brooklyn, N. Y.
Koelemay, L., Jr., 4403 Finley Dr., Shreveport, La.
Kohlhagen, W. S., 5850 Geiger Rd., El Paso, Tex.
Kolesar, A. M., Stu. Det. "C," AOAC No. 1, Ft. Sill, Okla.
Koon, John C., Box 1731, Greenville, S. C.
Korecki, Steven, 1109th ASU, HD of L.I.S., Ft. H. G. Wright, N. Y.
Kori, J. B., Jr., 3337 Post St., Jacksonville, Fla.
Kotick, John F., 10056 Drury Lane, Westchester, Ill.
Krangel, Albert, 3216 Kossuth Ave., Bronx 67, N. Y.
Krause, H. W., 4842 Oakdale Ave., Chicago 41, Ill.
Kreiser, L. G., PO Box 76, Rexmont, Pa.
Kressin, H. R., Stu. Det. "C," AOAC, Ft. Sill, Okla.
Krofchik, P., Hq., East. AAAC, Mitchel AFB, N. Y.
Lacouture, A. J., Jr., A Btry., 867th AAA AW Bn, APO 942, c/o PM. Seattle, Wash.
Ladd, Leon F., 4052d ASU, AA & GM Cen., Box 859, Ft. Bliss, Tex.
Laffitte, C. O., Btry. C, 68th AAA Gun Bn., Ft. Lewis, Wash.
Lamar, E. F., 4065 3d Ave., San Diego, Calif.
Lamb, Keith W., 3518 Garvin Ave., Richmond, Calif.
Lance, O. P., 1217 Prospect Ave., El Paso, Tex.
Landsman, Harry, Hq. & Hq. Btry., 68th AAA Gun Bn., Ft. Lewis, Wash.
Lane, W. K., 618 Colorado Ave., Brush. Colo.
Lanelli, L. P., 6707th ASU, ORC, Sr., Instr., Seattle, Wash.
Langdon, J. N., 77 Fernwood Park, Rochester 9, N. Y.
Langford, Edw. P., 22-05 202d St., Bayside, N. Y.
Langstaff, J. D., Jr., 111th SWU, Sandia Base, Albuquerque, N. M.
Laramy, J. M., 1857 Graham Ave., St. Paul 2, Minn.
Larson, D. E., 315th AAA Group, 1339 N. Lafayette Ave., Bremerton, Wash.
Laukaitis, A. B., Hq., 59th AAA AW Bn.-SP., Ft. Bliss, Tex.
Lawlor, J. D., 145 Winthrop St., Taunton, Mass.
Lawrie, D. W., 512 N. Ford Ave., Wilmington, Del.
Lawrence, H. F., 507th AAA AW Bn., APO 201-1, c/o PM, San Francisco, Calif.
Leadbetter, H. G., 72 Maple St., Dobbs Ferry, N. Y.
Lee, L. M., Apt. "C-12-C" Carvots, Columbia, S. C.
Lehne, C. A., Hq., 59th AAA AW Bn-SP., Ft. Bliss, Tex.
Leisten, H. J., 6056 N. Ottaway, Chicago 31, Ill.
Leland, Lester D., RR 4, Plymouth, Ind.
Lemere, F. P., AA & GM Br., TAS, Ft. Bliss, Tex.
Lennig, Edw. N., Jr., 5508 Locust St., Philadelphia, Pa.
Lenning, C. F., Hq., Ft. Story, Va.
Leslie, E. E., Jr., Wynerlie, Bristol, R. I.
Levendusky, H. G., Stu. Det., Mil. Police School, Cp. Gordon, Ga.
Lewis, Jack L., 820 Hamilton, St. Louis 12, Mo.
Liberato, A. C., 181 Gambetta St., San Francisco, Calif.

Lieber, Simion, 3027 S. Columbus St., Arlington, Va.
Ligon, L. R., 4528th ASU, ROTC, Louisiana State University, Baton Rouge, La.
Lindstrom, G. F., 38 Fuller Terrace, West Newton, Mass.
Little, H. G., Jr., 8 Murphy Rd., Deerhurst, Wilmington, Del.
Livingston, K. C., 3388 W. 151st St., Cleveland, Ohio.
Lochrie, Wilmer R., Hq., 75th AAA Gun Bn., Ft. Meade, Md.
Lockyer, R. H., Hq., 867th AAA AW Bn, APO 942, c/o PM, Seattle, Wash.
Loew, R. W., 765 Maple Ave., Glen Rock, N. J.
Lorck, Horace C., Hq., East. AAAC, Mitchel AFB, N. Y.
Lowe, H. A., 1913 Liberty St., Lawton, Okla.
Lown, James M., Hq., 19th AAA Group, Ft. Meade, Md.
Lowry, Wm. K., 2720 Lee St., Columbia, S. C.
Lund, Carl R., 133th AAA AW Bn.-SP, 3146 N. Sawyer, Chicago, Ill.
Lyon, David L., AOC Regt., Team "L," Ft. Riley, Kan.
McCallum, A. R., Jr., 7805 Boston Ave., Silver Spring, Md.
McCarthy, Chas. R., 81 Florida St., Rochester, N. Y.
McCarthy, Max R., 552d AAA Gun Bn., APO 403, c/o PM, New York, N. Y.
McCartney, Dan A., Hq., 1100th ASU, New England Sub Area, Boston 10, Mass.
McCartney, Robt. W., 5700 St. Charles, El Paso, Tex.
McConnell, J. W., Jr., A-711th AAA Gun Bn., Cp. Gordon, Ga.
McCormack, J. I., 1118 Clifford Rd., Cleveland Heights 21, Ohio.
McCoy, John P., 1236 Astor St., Chicago 10, Ill.
McCoy, Richard N., 921 Pleasant Hill Rd., Walnut Creek, Calif.
McCravey, J. L., 570 Blacker St., El Paso, Tex.
McDaniel, C. A., Btry. B, 753d AA Gun Bn., APO 503, c/o PM, San Francisco, Calif.
McDonald, John A., 103 W. 141st St., New York, N. Y.
McDuffee, V. C., Box 227, Augusta, Kan.
McElligott, Jos. E., 1205 N. Lafayette St., Albuquerque, N. M.
McFadden, John J., Hq. Btry., 88th Abn. AA Bn., Ft. Campbell, Ky.
McGilton, H. J., 5120 Martin St., Los Angeles 32, Calif.
McGinn, Boyd, Btry. B, 68th AAA Gun Bn., Ft. Lewis, Wash.
McGuire, J. F., 3142 Buena Vista Terrace, S.E., Washington, D. C.
McGuire, Wm. B., Box 91, Shadyside, Anne Arundel County, Md.
McKay, W. D., 2518 Hartzell St., Evanston, Ill.
McKee, Henry R., Box 128, Greenwood, S. C.
McKee, R. A., 530 Atkins St., Shreveport, La.
McKenna, J. F., Hq., 96th AAA Gun Bn., APO 942, c/o PM, Seattle, Wash.
McKibben, Roy H., RFD 1, Little Falls, N. J.
McKinley, D. R., 235 Scholfield Rd., Rochester, N. Y.
McKinney, J. C., 1273d ASU, NG Armory, Jersey City 6, N. J.
McKnight, Wm. C., 338 Beach, 147th St., Neponset, L. I., N. Y.
McLeod, Wm. J., N. 8th St., Dillon, S. C.
McManus, J. B., 50 English Rd., Rochester, N. Y.
McNair, D. C., Dept. Matériel, Ft. Sill, Okla.
McNamara, J. R., Hq., 5th Air Force, APO 710, c/o PM, San Francisco, Calif.
MacDonald, G. W., RD No. 1, Berger, N. Y.
MacLeod, R. H., 443d AAA AW Bn., Ft. Devens, Mass.
Majka, W. C., 142 Kenyon St., Pawtucket, R. I.
Maldonado, A., Ave. Gen Vivanco, 539-F, Pueble Libre, Lima, Peru, South America.
Mallard, R. A., 1948 Boulevard, Jacksonville, Fla.
Malloy, W. J., Hq., Eastern AAAC Stewart AFB, Newburgh, N. Y.
Malone, A. G., Hq., 88th Abn. AA Bn., Ft. Campbell, Ky.
Malone, R. J., 5520 Fulton St., San Francisco, Calif.
Manniello, F. P., Oak Hill, N. Y.
Mariconda, A. F., Stu. Det. "C," AOAC 1, Ft. Sill, Okla.
Marion, Wm. R., Depot Rd., West Harwich, Mass.
Marshall, J. E., Jr., 2119 Lake Ave., Lawton, Okla.
Martin, Roy E., Box 713, Anderson S. C.
Martinec, S. J., Jr., 4 W. Water St., Coaldale, Pa.
Marx, Geo. H., U.S. Army Troops, Richland, Wash.
Massey, Wm. M., 1729 Filbert St., Oakland, Calif.
Massingtill, J. H., Jr., 753d AAA Gun Bn., APO 919, c/o PM, San Francisco, Calif.
Matey, J. G., 3525 Cliftmont Ave., Baltimore, Md.
Matthews, J. H., Jr., Hq., 59th AAA AW Bn.-SP, Ft. Bliss, Tex.
Matz, E. L., 23 Olga Rd., Vilone Village, Elsmere, Del.
Maust, A. A., 133 N. Dithridge St., Pittsburgh 13, Pa.
Maxwell, Edw. C., Hq., 715th AAA Gun Bn., Cp. Gordon, Ga.
Maykovich, J. J., 502d AAA Gun Bn., Ft. Bliss, Tex.
Mazzucchi, R. A., 1925 Oak St., Lawton, Okla.
Meadows, J. J., 2658 N. 81st St., Milwaukee 13, Wis.
Mee, W. S. L., III, 34th AAA Brigade, Ft. Bliss, Tex.
Meehan, Robt. L., 28 Woodside Ave., Larchmont, N. Y.
Melas, Chas. C., 590 W. 204th St., New York, N. Y.
Merrell, E. A., 3028 Bosque Blvd., Waco, Tex.
Merriell, D. M., Eckhart Hall, University of Chicago 37, Ill.
Messer, Zora, Btry. A, 62d AAA AW Bn.-SP, Ft. Hood, Tex.
Messner, M. H., Box 236, RR 2, Hughes Rd., Mt. Healthy 31, Ohio.
Meyer, Geo. C., Jr., 4208 Homer Dr., El Paso, Tex.
Meyer, Thos. D., 2632 Boundary St., San Diego 4, Calif.
Mielke, J. W., Hq., 59th AAA AW Bn.-SP, Ft. Bliss, Tex.
Miklautsch, Jos., 6220 Magnolia, Chicago 40, Ill.
Milkowski, S. L., 10 Blueberry Rd., Queen Sewell Park, Buzzards Bay, Mass.
Miller, K. H., Jr., 256 S. 45th St., Philadelphia, Pa.
Miller, R. E., 3027 Indiana St., Coconut Grove, Fla.
Miller, R. J., 5119 Jamieson, St. Louis, Mo.
Miller, Roger W., A-92d AAA AW Bn.-SP, APO 201-3, c/o PM, San Francisco, Calif.
Miller, Wilbur W., Hq., 717th AAA Gun Bn., Box 495, Albuquerque, N. M.
Millett, Elwood, Box 23, South Orrington, Maine.
Milmore, Chas. W., 34 Bellevue Rd., Swampscott, Mass.
Milner, Geo. L., Ft. Meade, Md.
Minch, H. G., 4052d ASU, AA & GM Cen., Ft. Bliss, Tex.
Miner, J. C., 209th AAA Group, 68 Ashland Ave., Buffalo 13, N. Y.
Mittelkauf, Geo. E., c/o Bisceglia, 278 E. 237th St., New York 66, N. Y.
Mockbee, Jack, Hq., FEC, GHQ, APO 500, c/o PM, San Francisco, Calif.
Moeller, R. S., 41-A Parkway Village, Cranford, N. J.
Moen, J. L., Apt. 7, 2701 Durant Ave., Berkeley, Calif.
Moen, James L., Rt. 1, Box 564, Fresno, Calif.
Mohn, S. R., 71st AAA Gun Bn., Ft. Belvoir, Va.
Molinari, M. C., 110 Alameda Ave., Salinas, Calif.
Mooney, H. F., 507th AAA AW Bn., APO 75, c/o PM, San Francisco, Calif.
Moore, Alva J., A-69th AAA Gun Bn.-M, Ft. Bliss, Tex.
Morgan, Rex S., 443d AAA AW Bn., Ft. Devens, Mass.
Morris, Abraham, 30 S. Broadway, Yonkers, N. Y.
Morris, H. A., Ft. Washington, Pa.
Moser, R. F., 32 Village Lane, Rochester 10, N. Y.
Moulton, M., 4975 West Point Loma Blvd., San Diego 7, Calif.
Mulrain, Mandas S., 31 Carmen St., Patchogue, N.Y.
Munz, John H., 25 E. Fernbank Ave., Delmar, N. Y.
Murello, Chas. E., B-60th AAA AW Bn., Ft. Scott, Calif.
Murphy, F. F., 1541 Manchester Ave., Westchester, Ill.
Murphy, James R., 2915 22d St., San Francisco, Calif.
Murray, Jos., Jr., 2017 Edmunds St., Seattle 8, Wash.
Musselwhite, E. L., Jr., 4054th ASU, Ht. Btry., AA & GM Cen., TAS, Ft. Bliss, Tex.
Myers, E. F., Co. C, 809th Engr. Avn. Bn., Ft. Francis E. Warren, Wyo.
Nason, R. B., Blacksmith Hill, Middle Haddam, Conn.
Natal, S. M., B-64th AAA Gun Bn., APO 713, Unit 1, c/o PM, San Francisco, Calif.
Nelligan, M. H., Ft. Washington, Washington 20, D. C.
Nemeth, S. A., TAS, Ft. Sill, Okla.
Neprosazatis, F. E., 3734 Oriole Ave., Chicago 34, Ill.
Nery, Carl N., 901 Rolling Rock Rd., Pittsburgh 34, Pa.
Newcomb, B. L., 220 West St., Stockbridge, Mich.
Newman, James W., 5450 St. Charles, El Paso, Tex.
Nicolson, D. M., 112 Sherwood Way, South San Francisco, Calif.
Nicolson, H. M., Jr., 3406 Devon Way, Redwood City, Calif.
Nighbert, D. W., Box 495, Hq., 717th AAA Gun Bn., Albuquerque, N. M.
Nikas, Peter T., 616 W. 207th St., New York 34, N. Y.
O'Bryan, Wm. H., 1403 N. 69th East Ave., Tulsa, Okla.
Odette, R. E., 615 Hastings Rd., Baltimore 4, Md.
O'Donnell, Chas. F., Hq., 35th AAA Brigade, Ft. Meade, Md.
Oesterreicher, A. W., 3447 Sunnyside, Brookfield, Ill.
O'Hea, J. T., AA & GM Br., TAS, Ft. Bliss, Tex.
Olson, A. H., PO Box 305, Los Altos, Calif.
Omohundro, Robt. J., Hq., 40th AAA Brigade, APO 503, c/o PM, San Francisco, Calif.
Onderdonk, G. G., East Millstone, N. J.
Oppenheim, David S., 307 E. 44th St., New York 17, N. Y.
Opperman, R. C., Hq., 39th AAA AW Bn.-M, Ft. Meade, Md.
O'Quinn, G. C., RFD No. 1, Newberry, S. C.
Ostby, K., Nav. & Air Att., Norway Emb., 3409 Fulton St., Washington 7, D. C.
Oviatt, Wells, 206 4th St., San Salito, Calif.
Oyen, A. O., Dept. Extension Courses, TAS, Ft. Sill, Okla.
Packer, Ellis R., 1808 23d St., S.E., Washington, D. C.
Pajunas, Albert, 88th Abn. AA Bn., Ft. Campbell, Ky.
Pallman, Geo. H., Hq., 76th AAA AW Bn., APO 713, c/o PM, San Francisco, Calif.
Palmer, Robt. E., Hq., Western AAAC, Hamilton AFB, Calif.
Pandorf, E. C., 8029 Winton Rd., Cincinnati 24, Ohio.
Parker, Adam G., Hq., 97th AAA Group, APO 331, c/o PM, San Francisco, Calif.
Parker, G. S., 5 Sherwood Pl., Staten Island 8, N. Y.
Parr, Elbert S., 201 Ramond Dr., El Paso, Tex.
Parrino, M. F., 837 Penfield St., New York, N. Y.
Pascoe, L. F., 6086 Bucyrus St., Cleveland, Ohio.
Pashley, W. A., Jr., B-4055th ASU, 1st GM Regt., Ord. Res. & Dev. Div., Ft. Bliss, Tex.
Pavick, Peter D., 726 N. 16th St., Lawton, Okla.
Paviour, Robert F., 0239 Lincoln Alliance Bank Bldg., Rochester 4, N. Y.
Pechulis, F. V., C-867th AAA AW Bn.-M, APO 942, c/o PM, Seattle, Wash.
Pederson, L. M., A-76th AAA AW Bn.-SP., APO 902, c/o PM, San Francisco, Calif.

Perkins, John R., 929 Law St., San Diego 9, Calif.
Peters, Geo. F., Hq., 212th AAA Group, N.Y. NG, 120 W. 62d St., New York 23, N. Y.
Peterson, O. K., 597 Webford Ave., Des Plaines, Ill.
Peyer, G. A., Jr., Hq., 40th AAA Brigade, APO 503, c/o PM, San Francisco, Calif.
Picard, A. E., 8873 Frankstown Rd., Pittsburgh 21, Pa.
Pierce, Geo. O., 532 Orange Grove Ave., South Pasadena, Calif.
Pierce, L. W., Jr., A-507th AAA AW Bn., APO 929, c/o PM San Francisco, Calif.
Pieri, Wm. D., Jr., 12819 Appleton, Detroit, Mich.
Piper, R. J., 128 St. Lawrence Ave., Reno, Nev.
Panadeball, F. S., 654 Bolivar St., Santurce, Puerto Rico.
Plant, O. M., Box 222, Richmond, Utah.
Ply, S. R., 80th Abn. AA Bn., Ft. Bragg, N. C.
Pohlmann, C. F., 6127 N. Rampart St., New Orleans, La.
Poll, Michael E., 2403 Franklin Ave., New Orleans 17, La.
Popiel, F. J., 12 Frank St., Providence 3, R. I.
Porter, Riley K., 4453 Finley, Shreveport, La.
Postol, Harry, 145th ORC Gp., 33 Bay, 22d St., Brooklyn 14, N. Y.
Price, I. L., Jr., Swainsboro, Ga.
Primo, F. A., Hq., 226th AAA Gp., Ft. Bliss, Tex.
Proctor, Frank T., Statesboro, Ga.
Proctor, Wm. M., 11th AAA AW Bn.-SP, Ft. Lewis, Wash.
Purvis, Chas. R., 2014 Somerset St., Green Meadows, Md.
Radigan, Peter M., Hq., 15th AAA AW Bn.-SP, Ft. Lewis, Wash.
Raigoza, Juan, Hq., 69th AAA Gun Bn.-M, Ft. Bliss, Tex.
Rawcliffe, Wm. F., Hq., 10th AAA Group, Ft. Lewis, Wash.
Real, Stewart G., Hq., 19th AAA Group, Ft. Meade, Md.
Redinger, J. C., B-30th AAA AW Bn., Ft. Custer, Mich.
Reed, D. R., 1620 Richards Ave., La Porte, Ind.
Reeside, J. B., III, Box 177, Hyattsville, Md.
Repiha, S., 266 Ann St., Clarendon Hills, Ill.
Rhodes, H. R., 209 S. Waverly St., Kennewick, Wash.
Riccio, J. A., Hq. Btry., 867th Bn., APO 942, c/o PM, Seattle, Wash.
Richard, Stanley G., Hq. & Hq. Btry., 62d AAA AW Bn.-SP, Ft. Hood, Tex.
Richey, Leon L., 16715 Bringard Dr., Detroit 5, Mich.
Ride, W. T., Jr., Hq., 78th AAA Gun Bn., APO 660, c/o PM, San Francisco, Calif.
Riggs, Leland, Statesboro, Ga.
Ringen, H. S. C., 15 Laurel Pl., Glen Ridge, N. J.
Roberts, W. F., 27 Church St., Warren, R. I.
Robinson, D. S., RD 4, N. Little Cr. Rd., Dover, Del.
Robinson, E. A., RFD 2, Hicksville, N. Y.
Robinson, G. E., 2755 40th Ave., San Francisco, Calif.
Robinson, N. A., 4581 Pomona Ave., La Mesa, Calif.
Robinson, Robt. S., 17 Kent Rd., White Plains, N. Y.
Rodes, Wm. R., Hq., 75th AAA Gun Bn., Ft. Meade, Md.
Rodgers, Wm. J., 274 28th Ave., San Francisco, Calif.
Rogers, Carl F., 10137 Felton Ave., Inglewood, Calif.
Rogers, E. R., Qtrs. 553-C, Ft. Bliss, Tex.
Rogers, M. A., 15-B Stillwell, Ft. Leavenworth, Kan.
Rogers, V. D., Hq., 78th AAA Gun Bn.-90mm, Ft. Lewis, Wash.
Rolston, Brown, Jr., B-865th AAA AW Bn., APO 7, c/o PM, San Francisco, Calif.
Romaguera, N. J., 3215 Louisiana Ave., Parkway 1, New Orleans, La.
Rosaaen, W. O., 1367 Pierce Ave., San Leandro, Calif.
Roscoe, L. W., Hq., 70th AAA Gun Bn., Ft. Meade, Md.
Rose, E. L., Hq., 50th AAA AW Bn., Ft. Bliss, Tex.
Rose, Kirk M., 352 W. Vertona -R-, Seattle, Wash.
Rosenzweig, M., 2232 State St., New Orleans, La.
Roskelley, L. J., 122 N. 9th Buhl, Idaho.
Roton, W. F., 753d AAA Gun Bn., APO 919, c/o PM, San Francisco, Calif.
Rowley, O. B., Box 97, Pettus, Tex.
Rudloff, L. A., 14 Butler Pl., Brooklyn 17, N. Y.
Rudy, J. H., PO Box 271, Drexel Hill, Pa.
Rudy, Wilbur D., Hq., 19th AAA Group, Ft. Meade, Md.
Russell, E. O., Jr., c/o Du Pont Co., South San Francisco, Calif.
Russell, S. R., 725 Coverdale Rd., Wilmington, Del.
Rutherford, R. D., Box 1154, AA & GM Br., TAS, Ft. Bliss, Tex.
Ruths, C. F., 1828 N. Quantico St., Arlington, Va.
Rutkovsky, Paul, US Army & AF Recruiting, Main Sta., Portland, Maine.
Ryon, John C., Hinesville, Ga.
Safire, Edw., 510 Quincy Ave., Scranton 10, Pa.
Saladin, F. N., 3032 Santiago, San Francisco, Calif.
Sanborn, Edwin H., 85 Codman St., Portland, Maine.
Sandager, R. K., 707 University Ave., S.E., Minneapolis 14, Minn.
Sandercock, Wm. J., D-76th AAA AW Bn., APO 323, c/o PM, San Francisco, Calif.
Sanders, C. L., B-732 AAA AW Bn., Klamath Armory, Klamath Falls, Ore.
Sanders, Robt. W., 5301 Olvera Ave., San Diego, Calif.
Sannes, John R., 311 10th Ave., W., Ashland, Wis.
Sarles, Theo., 41st AAA Gun Bn., Ft. Bliss, Tex.
Sawyer, W. L., 1422 Berry St., Sandston, Va.
Sayles, H. L., 301 S. Brainard, La Grange, Ill.
Schenck, H. W., 6816 W. 85th St., Los Angeles 45, Calif.
Schimmel, B. H., Hq., HD, Narragansett Bay, Ft. Adams, R. I.
Schneider, C. L., 188 N. Oxford St., St. Paul 4, Minn.
Schurtz, J. O., 71st AAA Gun Bn., Ft. Belvoir, Va.
Schwand, M. W., 6323 Farmbrook, Detroit 24, Mich.
Scippa, C. J., 651 Honeyspot Rd., Stratford, Conn.
Seabrook, G. W., 1301 E. River St., El Paso, Tex.
Seeber, John A., 4413 Hueco St., El Paso, Tex.
Sense, Geo. A., AFF Bd. No. 4, Ft. Bliss, Tex.
Shaffer, G. W., 3980 Rose Hill Ave., Cincinnati 29, Ohio.
Shaw, Wm. G., 729 Nottingham Rd., Wilmington, Del.
Shearman, F. W., 4 Conway Rd., Bankstown, New South Wales, Australia.
Sheahan, Walter A., 958 Madison Ave., Albany, N. Y.
Sheehan, James T., 3125 Montana Ave., El Paso, Tex.
Shelton, F. W., NG Armory, W. Wycke St., Whiteville, N. C.
Sherman, R. G., 203 N. Douglas, Peoria, Ill.
Shockley, James W., AOAC 1, Ft. Sill, Okla.
Shook, Theo., Hq., 40th AAA Brigade, APO 503, c/o PM, San Francisco, Calif.
Siebels, L. A., 3811-A Carter Ave., St. Louis, Mo.
Sieck, Wm. D., 4810 N. Winchester, Chicago, Ill.
Sikorski, Wm., 4052d ASU, AA & GM Cen., Ft. Bliss, Tex.
Silverstein, M., Box 1357, AA & GM Br., TAS, Ft. Bliss, Tex.
Simon, L. E., 10 DeBolt Lane, Richmond, Ind.
Simpson, Geo. F., Jr., 602 W. Blount St., Pensacola, Fla.
Sinclair, F. N., 1610 McGee Ave., Berkeley 3, Calif.
Sitnik, B. E., 17121 Via Piedras, San Lorenzo, Calif.
Skillman, B. D., 4957 University Avenue, San Diego, Calif.
Skipper, John D., Box 1671, Ft. Sill, Okla.
Skitsko, Geo., 3350th ASU, Box 1170, Jacksonville, Fla.
Slater, L. Z., 526 Madison St., New Orleans, La.
Sliepka, John S., 2710 W. 24th Pl., Chicago 8, Ill.
Sloan, Robt. F., 7936 Justine Ave., Chicago, Ill.
Smeland, Ralph W., 2317 Flores St., San Mateo, Calif.
Smelt, Thos. J., 33 Marlborough Rd., Rochester, N. Y.
Smith, Bowen N., Stu. Det. "C," AOAC 1, Ft. Sill, Okla.
Smith, David R., Hq., 16th AAA Group, Ft. Bliss, Tex.
Smith, Jas. L., Jr., Hq., 19th AAA Group, 2003 Preston Rd., Glen Burnie, Md.
Smith, Sanford A., 47th Spec. Serv. Co., APO 246, c/o PM, San Francisco, Calif.
Smith, S. R., 209 W. Oregon St., Urbana, Ill.
Smith, Walter M., Hq., 80th Abn. AA Bn., Ft. Bragg, N. C.
Smith, Wm. J., 1912 Gore Rd., Lawton, Okla.
Smith, Wm. W., Rt. 4, Laconia, N. H.
Smreker, H. P., 1308 Cooley Dr., Borger, Tex.
Snead, Jos. A., Hq., 4th Army, Ft. Houston, Tex.
Snell, Daniel T., RFD 1, Uncasville, Conn.
Snyder, L. E., 8335 Grubb Rd., Apt. 201, Silver Spring, Md.
Snyder, P. F., 10104 McKenney Ave., Silver Spring, Md.
Sobke, L., US Army Mission, Bolivia, c/o US Embassy, La Paz, Bolivia.
Soltys, A. T., Hq., 95th AAA Gun Bn, Ft. Lewis, Wash.
Somerville, Wm., 157 Reservoir Ave., Providence, R. I.
Soule, J. I., Hq., 97th AAA Group, APO 331, c/o PM, San Francisco, Calif.
Spalding, B. D., Jr., Rt. 56, Box 376, Sunset Dr., El Paso, Tex.
Spencer, James C., Mack Rd., Middlefield, Conn.
Spizzirri, L. G., 2661 Sherwin Ave., Chicago, Ill.
Spring, D. M., Jr., 2909 N. Hills Dr., Atlanta, Ga.
Stachelski, A. C., Jr., C-70th AAA Gun Bn., Ft. Meade, Md.
Staffieri, L. D. F., Hq., 865th AAA AW Bn.-SP, APO 713, c/o PM., San Francisco, Calif.
Staley, F. S., Hq., 21st AAA AW Bn.-SP, Ft. Bliss, Tex.
Stam, F., Nav. Att., Netherland Emb., Bur. Nav. Att., Washington 9, D. C.
Stamm, C. H., 504 Cook St., Lewiston, Mont.
Stanford, W. P., Box 283, Crestview, Fla.
Stanton, A. M., Box 786, Florence, S. C.
Stanton, D. W., Jr., B-710th AAA Gun Bn., Va. NG, 1320 Martha Custis Dr., Alexandria, Va.
Stauffer, Chas, J., 4773 E. Southern Ave., Albuquerque, N. M.
Steinman, Wm., Hq., 21st AAA AW Bn.-SP, Ft. Bliss, Tex.
Stephens, Chas. E., Hq., 80th Abn. AA Bn., Ft. Bragg, N. C.
Stephenson, E. H., Rt. 7, Box 383, Olympia, Wash.
Stewart, Loren F. Qtrs. 1060-B, Ft. Bliss, Tex.
Stigers, J. W., 7522d Sv. Unit, ROTC, Mayaguez, Puerto Rico.
Stitzlein, C. H., Rt. 1, Box 14, Loudonville, Ohio.
Stokes, Jas. H., Hq., 34th AAA AW Bn., Ft. Bliss, Tex.
Stone, Wm. P., 126 Moffat Rd., Waban 68, Mass.
Stout, John M., Box 114, RFD, Arlington, Va.
Strater, John B., 200 Locust Ave., Rye, N. Y.
Stritzky, E. F., Hq., 212th AAA Group, 120 W. 62d St., New York 23, N. Y.
Strong, Ralph M., Hq., 79th AAA Gun Bn., Ft. Custer, Mich.
Stucke, C. H., RFD 2, Newberry, S. C.
Stutts, John R., D-69th AAA Gun Bn.-M, Ft. Bliss, Tex.
Suhrke, R. V., 850 Lawrence Ave., Chicago 40, Ill.
Sullivan, D. L., Jr., 2302d ASU, Schuylkill Arsenal, 2620 Greys Ferry Ave., Philadelphia 46, Pa.
Sullivan, T. F., 2232 Davidson Ave., Bronx 53, N. Y.
Sundberg, E. E., Hq., 226th AAA Gp., Ft. Bliss, Tex.
Sutton, Geo. M., 19 Arlington Dr., Tuscaloosa, Ala.

Sweeney, Robt. L., 3404 Manzana St., El Paso, Tex.
Sweers, P. C., Jr., Stu. Det., TAS, Ft. Sill, Okla.
Swords, L. H., 1019 Farmington Dr., Peoria, Ill.
Talbot, Max V., AFF Bd. No. 4, Ft. Bliss, Tex.
Talbott, D. C., 4101 N. Sheridan Rd., Chicago, Ill.
Taylor, A. B., Jr., Box 1491, Spartanburg, S. C.
Taylor, R. R., Jr., Box 1446, State College, Miss.
Tedick, Eugene, 1283d ASU, ROTC, Fordham University, New York 58, N. Y.
Tedesco, V. N., 1716 Park Ave., San Jose 11, Calif.
Temme, E. J., 6829 York Rd., Philadelphia 26, Pa.
Tenwinkel, H. F., 1156 ASU, Ofc., Sr. Instr., NG, Bridgeport, Conn.
Testa, John F., Sales Officer-Whse. No. 2, Ft. Bliss, Tex.
Thatcher, T. O., c/o Entomology Dept., Colorado A&M College, Ft. Collins, Colo.
Thews, V. W., 2300 S. Pacific Ave., San Pedro, Calif.
Thiebauth, C. K., 43 Bonair St., West Roxbury, Mass.
Thomas, Earle F., 287 Avenue "C," New York 9, N. Y.
Thomas, O. M., Hq., 867th AAA AW Bn.-M, APO 942, c/o PM, Seattle, Wash.
Thomas, Robt. E., 75th AAA Gun Bn.-Hq., Ft. Meade, Md.
Thompson, Chas. W., Engr. Sec., GHQ, FEC, APO 500, c/o PM, San Francisco, Calif.
Thompson, M. C., 7601 Twelfth St., Detroit 6, Mich.
Thorne, John H., Stu. Det., TAS, Ft. Sill Okla.
Thornhill, J. R., 382 Falstaff Rd., Rochester, N. Y.
Ticheli, Leo P., Hq., 39th AAA AW Bn., Ft. Meade, Md.
Titley, R. J., ROTC-Mil. Dept., University of Illinois, Urbana, Ill.
Torrisi, Fred T., 151 Garden St., Lawrence, Mass.
Townsend, L. B., Jr., B-70th AAA Gun Bn., Qtrs. 1216-C, Ft. Meade, Md.
Townsend, Robt. T., 1104½ Williams St., Lawton, Okla.
Trainor, Chas. R., 305 Hillmoor Dr., Woodmoor, Silver Spring, Md.
Treacy, J. J., Jr., 1461 Commonwealth Ave., Bronx 60, N. Y.
Thepagnier, D. M., Building 18, Jackson Bks., New Orleans, La.
Trice, Wm. A., Jr., D-4th AAA AW Bn., Ft. Meade, Md.
Trosclair, S. J., Jr., 102 Neil St., New Orleans 14, La.
Troska, Adam, River Rd., Lumberville, Pa.
Tubridy, F. J., 2332 University Ave., New York 53, N. Y.
Turitto, T., 3462 Bailey Ave., New York 63, N. Y.
Turner, E. E., 2112 Hopkins-Cross Rd., S., Minneapolis 16, Minn.
Tysinger, James W., 615 S. Elizabeth St., Wichita, Kan.
Underwood, John D., Statesboro, Ga.
Vancelette, P. D., 145 Culver Rd., Rochester 20, N. Y.
Vandervort, Chas. E., Hq., 675th FA Bn., Ft. Campbell, Ky.
Van Kamerik, J. G., 26 James St., Schenectady, N. Y.
Van Schelven, W. J., 4613 Harvard Rd., College Park, Md.
Vaughn, J. E., 1656 Mt. Eagle Pl., Alexandria, Va.
Vick, Geo. R., Box 97, Huntsville, Tex.
Vivori, J. A., Jr., 715 Congress St., S.E., Washington, D. C.
Vogt, V. G., 814 W. Roscoe St., Chicago, Ill.
Wagman, J. I., Merion/Garden Apts., No. 410-A, Merion, Pa.
Walker, Avery W., 912 College Ave., Niagara Falls, N. Y.
Walker, J. R., Jr., Hq., 867th AAA AW Bn.-M, APO 942, c/o PM, Seattle, Wash.
Walker, Robt. M., 1403 "C" Ave., Apt. D, Lawton, Okla.
Walsh, Chas. F., 1443 28th Ave., San Francisco, Calif.
Walsh, W. M., 3906 W. 83d St., Chicago 29, Ill.
Wangerian, Wm. F., 1248 Guildford Rd., Harundale-Glen Burnie, Md.
Warshaw, Bernard, Walterboro, S. C.
Washington, Chas. E., 114 Wood St., Hightstown, N. J.
Waters, V. E., 607 Rosemont Ave., Los Angeles, Calif.
Watts, G. E., Jr., 3524 Bandini, Riverside, Calif.
Weader, R. J., 98 Markham Pl., Little Silver, N. J.
Weaver, Floyd E., Hq., 79th AAA Gun Bn., Ft. Custer, Mich.
Webb, John B., Rt. 1, Box 105, Cantonment, Fla.
Weir, Norman L., Hq., Eastern AAAC, Mitchel AFB, N. Y.
Weiss, Horton C., Hq., 59th AAA AW Bn.-SP, Ft. Bliss, Tex.
Weisskopf, L. J., 5232 W. Van Buren St., Chicago 44, Ill.
Wellbaum, Harold, Jr., 9120 N.W. 15th Ave., Miami, Fla.
Welling, J. L., Jr., 1207 Fair St., Newberry, S. C.
Wellman, N. E., Hq., 717th AAA Gun Bn.-90mm, Box 495, Albuquerque, N. M.
Weltman, A., 100 S. Village Ave., Rockville Center, L. I., N. Y.
Wendle, Hugh M., 1128th ASU, ROTC, University of Maine, Orono, Maine.
Werner, Donald E., 502 S. Zillah St., Kennewick, Wash.
Werner, F. A., 315 S. Center St., Bloomington, Ill.
Wesley, J. S., Jr., 749 Putnam Ave., Brooklyn, N. Y.
West, J. H., Jr., 9 Talbot St., Montclair, N. J.
Westerdahl, Wm. E., 3820 43d Ave., S., Minneapolis 4, Minn.
Wetmore, Geo., RFD 1, Selkirk, N. Y.
White, H. P., PO Box 1852, Cleveland, Ohio.
White, John B., Hq., 68th AAA Gun Bn., Ft. Lewis, Wash.
White, John C., Ft. Wadsworth, N. Y.
White, Paul R., Hq., 865th AAA AW Bn., APO 7, c/o PM, San Francisco, Calif.
White, Thos. A., 44 12th Ave., Columbus 1, Ohio.
Whitfield, John, Rail Br., Transptn. Sch., Ft. Eustis, Va.
Wickersham, E. B., Rt. 3, Washington, Ga.
Wigely, John G., General Delivery, Hermosa Beach, Calif.
Wilke, R. G., 459th AAA AW Bn., 3947 N. Farwell Ave., Milwaukee, Wis.
Wilkerson, O. O., 2605 W. Blount St., Pensacola, Fla.
Wilkinson, R., Jr., 3244th ASU, The Citadel, Charleston, S. C.
Willett, T. A., Jr., 1021 "A" St., Portsmouth, Va.
Williams, B. C., Hq., 70th AAA Group, APO 713, c/o PM, San Francisco, Calif.
Williams, R. F., 153 N. New Hampshire Ave., Los Angeles 4, Calif.
Williamson, W. H., Jr., 2409 Texas Ave., Shreveport, La.
Wilson, Chas. A., Jr., AFF Bd. No. 4, Ft. Bliss, Tex.
Wilson, Glenn H., Hq., 22d AAA Group, Ft. Custer, Mich.
Wilson, John M., R.O.A., Driggs, Idaho.
Wilson, L. A., Dept. Observation, TAS, Ft. Sill, Okla.
Wilson, Robt. L., 813 Greene Ave., Brooklyn, N. Y.
Winslow, J. G., 1148 Fifth Ave., New York, N. Y.
Winterbottom, F. W., 110 Oak St., Laconia, N. H.
Witty, Stuart E., Hq., 69th AAA Gun Bn.-M, Ft. Bliss, Tex.
Wolf, M. J., 2160 Redfern Rd., Jacksonville 7, Fla.
Wood, Melvin W., 1828 S. Washington, Wichita, Kan.
Wood, Russel H., 65th AAA Gun Bn., APO 331, c/o PM, San Francisco, Calif.
Wood, Wm. B., Varnville, S. C.
Woodruff, Robt. L., 81 S. Highland Ave., Ossining, N. Y.
Wooldridge, K. D., 507th AAA AW Bn., APO 201, c/o PM, San Francisco, Calif.
Wreidt, N. M., PO Box 5500, 133d Spec. Wpns. Unit, Albuquerque, N. M.
Wright, Alexander, Alexander Ave., Washington, Ga.
Wyckoff, Theo., B-67th AAA Gun Bn., Ft. Bliss, Tex.
Wylie, John P., 55 Haverford Rd., Warwick, R. I.
Wyren, Harry W., 1671 N. Prospect Ave., Milwaukee 2, Wis.
Wyss, Herman, Jr., 62 Packard Ave., Greenwood, R. I.
Yarborough, M. D., B-4th AAA AW Bn.-M, Ft. Meade, Md.
Yates, Jack, 1924 Chestnut St., Wilmington, N. C.
Young, Blaine E., A-88th Abn. AA Bn., Ft. Campbell, Ky.
Young, James W., Hq., 34th AAA Brigade, Ft. Wadsworth, N. Y.
Zais, Carl G., Hq., 68th AAA Gun Bn., Ft. Lewis, Wash.
Zaldo, W. T., Jr., Qtrs. 552-B, Ft. Bliss, Tex.
Zillich, J. J., 1405 Ange St., El Paso, Tex.
Zupancic, L. J., 1079 E. 76th St., Cleveland 3, Ohio.

FIRST LIEUTENANTS

Abrams, L. W., 3116 Memphis St., El Paso, Tex.
Albert, Oscar H., 3420 Livingston St., New Orleans, La.
Albro, I. C., 503d AAA Opns. Det., Ft. Meade, Md.
Alchimisti, E. G., 515 30th Ave., San Mateo, Calif.
Alexander, J. B., Jr., 37th AAA Gun Bn., APO 503, c/o PM, San Francisco, Calif.
Allen, J. H., Jr., 214 S. Yelm St., Kennewick, Wash.
Allen, Robert H., Jr., Hq., 39th AAA AW Bn., Ft. Meade, Md.
Alphonso, C. P., Chalmette, La.
Anderson, H. R., 62d AAA AW Bn.-SP, Cp. Hood, Tex.
Anderson, Richard C., 753d AAA Gun Bn., APO 919, c/o PM, San Francisco, Calif.
Appel, Edward J., 4th AAA AW Bn., Ft. Meade, Md.
Arant, Phillip W., 59th AAA AW Bn.-SP, Ft. Bliss, Tex.
Arling, Raymond, 1204 W. Taylor St., Chicago, Ill.
Armstrong, Thomas R., Hq., 21st AAA AW Bn.-SP, Ft. Bliss, Tex.
Armstrong, William, 201 Wengler Ave., Aharon, Pa.
Armstrong, William H., 867th AAA AW Bn.-M, APO 942, c/o PM, Seattle, Wash.
Arnold, Allyn B., Jr., 18 High St., Bethel, Conn.
Asher, John T., 79th AAA Gun Bn., Ft. Custer, Mich.
Aulds, M. M., 443d AAA AW Bn., Ft. Devens, Mass.
Avery, William H., Jr., 40th AAA Brigade, APO 503, c/o PM, San Francisco, Calif.
Bagwell, Grady L., 11th AAA Group, Ft. Bliss, Tex.
Bailey, Ewell B., Statesboro, Ga.
Bailey, Robert L., Superior, Wyo.
Baker, Glen, Hq., Armed Forces Special Weapons Project, PO Box 2610, Washington, D. C.
Balsley, K. R., 39th AAA AW Bn., Ft. Meade, Md.
Bardsley, George W., Jr., 621 W. 47th St., Los Angeles 37, Calif.
Barnes, Edw. M., 443d AAA AW Bn., Ft. Devens, Mass.
Barrentine, James R., 75th AAA Gun Bn., Ft. Meade, Md.
Barrett, E. F., 865th AAA AW Bn.-SP, APO 7, Unit 3, c/o PM, San Francisco, Calif.
Barrett, F. B., 421st AAA Gun Bn., State Bldg., Reno, Nev.
Barrett, H. H., 25 Vredenburg Ave., Yonkers 4, N. Y.
Barron, John I., York, S. C.
Barth, E. J., 1307 N. Piedras, El Paso, Tex.
Bauer, H. H., 1014 Neil Ave., Columbus, Ohio.
Baum, Robert E., 501 Concord Dr., Palo Alto, Calif.

Baumgartner, I. P., 16th AAA Group, Ft Bliss, Tex.
Beall, Tyson F., 2580-A Jefferson St., Napa, Calif.
Bean, John J., 1330 Rio Grande, El Paso, Tex.
Beckage, Paul, 69th AAA Gun Bn., Ft. Bliss, Tex.
Bednarz, Joseph P., 59th AAA AW Bn.-SP, Ft. Bliss, Tex.
Belk, Roger H., City Radio & Electronics, Lancaster, S. C.
Bennett, Samuel C., 1027 W. 108th St., Los Angeles, Calif.
Benton, John C., 2907 Franklin St., San Francisco 23, Calif.
Bice, Vernon M., 341 W. B Ave., Glendale, Ariz.
Bickerdike, C. P., 11th AAA AW Bn., Ft. Bliss, Tex.
Biess, Isadore, 539 44th Ave., San Francisco, Calif.
Blustein, L. N., 19968 Hubbell, Detroit 21, Mich.
Bonfoey, W. T., BOQ, 243, Ft. Bliss, Tex.
Boone, H. W., 76th AAA AW Bn., APO 323, c/o PM, San Francisco, Calif.
Bowden, E. R., Jr., Hq., 770th AAA Gun Bn., Ft. Lewis, Wash.
Boyer, Richard E., 79th AAA Gun Bn., Ft. Custer, Mich.
Branch, Jesse J., 69th AAA Gun Bn., Ft. Bliss, Tex
Brantley, E., Jr., 867th AAA AW Bn., APO 942, c/o PM, Seattle, Wash.
Braun, Donald V., Student Officers Det., AAA & GM Br., TAS, Ft. Bliss, Tex.
Braxley, S. E., 443d AAA AW Bn., Ft. Bliss, Tex.
Breed, Charles R., 50th AAA AW Bn., Ft. Bliss, Tex.
Breslin, T. P., 4-A Marlborough Gate, New Orleans, La.
Breton, Jos. E., 2d Inf. Div., Ft. Lewis, Wash.
Brickner F. W., 507th AAA AW Bn., APO 201, Unit 1, c/o PM, San Francisco, Calif.
Bridges, J. L., 60th AAA AW Bn., Ft. Ord, Calif.
Broady, B. J., 793 W. Parkview Ave., St. Paul 3, Minn.
Broida, Donald, 59th AAA AW Bn., Ft. Bliss, Tex.
Brown, John, 1423 W. Emdale Ave., Chicago 26, Ill.
Brown, William F., 10th AAA Group, APO 660, c/o PM, San Francisco, Calif.
Bruce, William J., 1232 Butterfield St., El Paso, Tex.
Budosh, S. J., 4233 Audrey Ave., Baltimore 25, Md.
Burkhardt, H. A., 867th AAA AW Bn., APO 942, c/o PM, Seattle, Wash.
Byargeon, R. I., 2622 N. 33d St., Waco, Tex.
Byrnes, George L., 32-27 82d St., Jackson Heights, L. I., N. Y.
Cacchiotti, R. R., 78th AAA Gun Bn., Ft. Lewis, Wash.
Cain, Lee R., Qtrs. 546-B, Ft. Bliss, Tex.
Calkin, George R., 208 Pasadale Rd., El Paso, Tex.
Calvert, George I., 406 High St., Williamsport 34, Pa.
Camiolo, T. A., 110 Braddocks Rd., Rochester, N. Y.
Camp, William H., PO Box 172, Estille, S. C.
Campbell, George C., High St., Cotuit, Mass.
Cantor, Sidney, 141-27 73d Terrace, Flushing, N. Y.
Capo, Charles E., 32-45 47th St., Long Island City 3, N. Y.
Carey, Howard H., 88th AAA Abn. Bn., Cp. Campbell, Ky.
Carr, J. W., Jr., 944 Rittiner Dr., Baton Rouge 11, La.
Carrington, W. J., AFF Board No. 4, Ft. Bliss, Tex.
Carter, C. A., 158 Adelphi St., Brooklyn, N. Y.
Casey, Edgar L., Student Det., TAS, Ft. Sill, Okla.
Casey, H. T., Jr., 41st AAA Gun Bn., Ft. Bliss, Tex.
Cavanaugh, J. W., 682 Grand Ave., St. Paul 5, Minn.
Cavin, Joseph, Jr., 2d Armored Div., Cp. Hood, Tex.
Chandler, A. L., PO Box 1731, Greenville, S. C.
Chapman, James R., 69th AAA Gun Bn., Ft. Bliss, Tex.
Charbonneau, V., 180 E. New York Ave., Valley Stream, N. Y.
Charnley, Ralph, 12 Cottage Ave., Centredale, R. I.
Chase, David W., 865th AAA AW Bn., APO 7, c/o PM, San Francisco, Calif.
Chatto, Winfield L., 16 Franklin St., Rockland, Maine.
Chewning, C. R., 2917 A Ave., Apt. B, National City, Calif.
Chisholm, Buff, Jr., 68th AAA Gun Bn., Ft. Lewis, Wash.
Chisholm, D. H., 14614 Heyden, Detroit 23, Mich.
Churchill, L. G., Jr., 507th AAA Opns. Det., APO 331, c/o PM, San Francisco, Calif.
Cilino, Stephen, White Sands Proving Grounds, Las Cruces, N. M.
Ciszek, J. C., 22d AAA AW Bn., APO 331, c/o PM, San Francisco, Calif.
Clark, George M., 865th AAA AW Bn., APO 7, c/o PM, San Francisco, Calif.
Clark, Richard C., Camden, Del.
Clark, Wallace M., 25 Calhoun St., Vallejo, Calif.
Clark, William J., Student Det., Army Language School, Presidio of Monterey, Calif.
Cochran, John J., 753d AAA Gun Bn., APO 919, c/o PM, San Francisco, Calif.
Coghlan, J. E., 867th AAA AW Bn., APO 942, c/o PM, Seattle, Wash.
Cole, Ward W., 119 State St., Batavia, N. Y.
Coleman, Geo. J., 1901 Annapolis Rd., Meade Heights, Md.
Colhard, F. T., 867th AAA AW Bn., APO 942, c/o PM, Seattle, Wash.
Collier, James G., Box 1731, Greenville, S. C.
Collins, Michael G., 867th AAA AW Bn., APO 942, c/o PM, Seattle, Wash.
Comolli, Louie, 167 Springdale Rd., Elberton, Ga.
Condon, Chester, 3914 9th St., N.E., Washington, D. C.
Conner, W. M., 1611 A St., N.E., Washington, D. C.
Connor, Edgar, 79th AAA Gun Bn., Ft. Custer, Mich.
Conroy, Geo. L., 911 Park Ave., Apt. 108, Laurel, Md.
Cook, Berto M., 922 E. 141st St., Cleveland 10, Ohio.
Coon, John E., 865th AAA AW Bn., APO 7, c/o PM, San Francisco, Calif.
Cotton, John V., 914 Park Ave., Laurel, Md.
Cowan, Kenneth L., 39th AAA AW Bn., Ft. Meade, Md.
Cowen, Jack M., 2324 W. North Ave., Baltimore 16, Md.
Cox, Charles D., 504th AAA Opns. Det., Ft. Devens, Mass.
Cox, Osburne S., 3452 W. Frances Rd., Clio, Mich.
Craig, John S., 75th AAA Gun Bn., Ft. Meade, Md.
Cramer, Robert H., 405 Addison Rd., Riverside, Ill.
Craven, M. H., Box 786, Florence, S. C.
Craw, Clarence F., 5323 N.E. 19th Ave., Portland 11, Ore.
Crea, Rocco, 1569½ University Ave., St. Paul 4, Minn.
Culbreth, D. F., 59th AAA AW Bn., Ft. Bliss, Tex.
Cupps, Cecil C., Jr., 75th AAA Gun Bn., Ft. Meade, Md.
Curran, H. E., 21st AAA AW Bn., Ft. Bliss, Tex.
Currier, R. E., 65th AAA Gun Bn., APO 331, c/o PM, San Francisco, Calif.
Curtis, Arthur, BOQ 5105, Ft. Bliss, Tex.
Czapran, W. P., 70th AAA Gun Bn., Ft. Meade, Md.
Czworniak, C. F., 4339 S. Paulina, Chicago, Ill.
Dahlquist, Fred C., 8104 Sv. Det., APO 331, c/o PM, San Francisco, Calif.
Daniels, John H., 10th AAA Group, Ft. Lewis, Wash.
Darling, B. P., 94th AAA Gun Bn., APO 713, Unit 1, c/o PM, San Francisco, Calif.
Darsey, James R., Hinesville, Ga.
Daspit, Alvin, 2330 Santiago St., San Francisco, Calif.
Davies, William, Division Rd., East Greenwich, R. I.
Davis, Claude C., 1322 Dwight Way, Berkeley, Calif.
Davis, John C., 10th AAA Group, APO 660, c/o PM, San Francisco, Calif.
Day, Harvey C., 504th AAA Gun Bn., Ft. Custer, Mich.
Deane, T. J., 1888 University Ave., New York 53, N. Y.
DeCecca, M. C., 92 Martine Ave., White Plains, N. Y.
Deitch, Eward A., 753d AAA Gun Bn., APO 919, c/o PM, San Francisco, Calif.
Delong, Harry L., Jr., 818 Ventura Ave., Richmond, Calif.
Demers, G. P., 760 Lassen St., Richmond, Calif.
Demerrit, Edwin H., Camp Stoneman Personnel Center, Pittsburg 5, Calif.
Demone, C. J., 32 Main St., Hyannis, Mass.
Dempsey, Fred G., 4235 Homer Drive, El Paso, Tex.
Denes, George M., 596 Green Ave., Brooklyn, N. Y.
Depaul, E. F., Box 560, Ft. Bliss, Tex.
Deweese, Robert, 97th AAA Gun Bn., APO 323, c/o PM, San Francisco, Calif.
Dick, Arthur J., FECOM, APO 500, c/o PM, San Francisco, Calif.
Dickinson, Charles W., AAA & GM Br., TAS, Ft. Bliss, Tex.
Diehl, William A., 146 Vernon Ave., Yonkers, N. Y.
Dilley, Roy E., 1071 Homewood Dr., Lakewood 7, Ohio.
Dillon, P. J., 812 Newhall Ave., Burlingame, Calif.
Dils, H. E., Jr., 66 E. Hillcrest, Dayton, Ohio.
Dinwiddie, E. W., 443d AAA AW Bn., Ft. Devens, Mass.
Dixon, F. J., 71st AAA Gun Bn., Ft. Belvoir, Va.
Dommer, Joseph T., 39th AAA AW Bn., Ft. Meade, Md.
Donohue, J. T., Jr., Pers. Res. & Proc. Br., A.G.'s Office, Pentagon, Washington, D. C.
Dorman, J. R., Jr., G-4, GHQ, FECOM, APO 500, c/o PM, San Francisco, Calif.
Dougherty, G. A., 60th Inf. Regt., 94th Inf. Div., Ft. Dix, N. J.
Drinkwater, E. C., 40th AAA Brigade, APO 503, c/o PM, San Francisco, Calif.
Dryden, John F., 41st AAA Gun Bn., Ft. Bliss, Tex.
Duncan, J. B., Jr., Traffic Dept., Georgia & Florida RR., Augusta, Ga.
Dunlap, Beverly J., 865th AAA AW Bn., APO 7, c/o PM, San Francisco, Calif.
Dwyer, John W., III, 75th AAA Gun Bn., Ft. Meade, Md.
Dyer, Allan O., 30th AAA AW Bn., Ft. Custer, Mich.
Dyer, C. P., 11 Grove St., Winchester, Mass.
Dynia, John, 502d AAA Gun Bn., APO 937, c/o PM, Seattle, Wash.
Dyson, Joseph R., E. Robert Toombs Ave., Washington, Ga.
Earl, Wayde F., Park Place, Lake George, N. Y.
Ebel, Henry N., Ft. Warren Det., Ft. Banks, Mass.
Edington, D. W., 21st AAA AW Bn., Ft. Bliss, Tex.
Eger, Robert L., 815 18th St., N.W., Washington, D. C.
Eichling, Robert E., 21st AAA AW Bn., Ft. Bliss, Tex.
Elliott, James S., 39th AAA AW Bn., Ft. Meade, Md.
Emery, James I., Co. A. 36th Armd. Inf. Div., 3d Armored Div., Ft. Knox, Ky.
Engle, Robert C., 16563 Linwood, Detroit 21, Mich.
English, William E., 16 Cedar St., Laconia, N. H.
Erd, Harry S., Jr., 3503 Gratiot Ave., Port Huron, Mich.
Evans, Trevor, 443d AAA AW Bn., Ft. Devens, Mass.
Ewalt, Grant C., 1437 Ellison Dr., Lima, Ohio.
Fahey, Russell E., 5925 Monadnock Way, Oakland 5, Calif.
Farnsworth, Paul V., 4522 N. 15th St., Omaha 11, Neb.

Farris, Philip A., 88th Abn. AAA Bn., Ft. Campbell, Ky.
Fay, Earl E., 1019 Britton Rd., Rochester, N. Y.
Fender, David G., 103 W. 12th St., Jacksonville, Fla.
Field, Henry J., General Delivery, Seneca, S. C.
Finnegan, James A., 16742 Lola Dr., Detroit 19, Mich.
Fischer, K. P., 75th AAA Gun Bn., Ft. Meade, Md.
Fisler, Benjamin H., 6 Burke Terrace, Rochester 13, N. Y.
Fire, Max D., 4329 N. Western Ave., Chicago 18, Ill.
Fletcher, J. T., 196 Hancock St., Brooklyn, N. Y.
Flynn, Arthur J., 62d AAA AW Bn., Cp. Hood, Tex.
Foley, Francis W., 35th AAA Brigade, Ft. Meade, Md.
Fonjalliaz, R. A., 78-48 267th St., Bellerose, N. Y.
Forgue, Zoel R., 1089 Harvard, Berkley, Mich.
Fort, Alvin E., Box 645, TAS, Ft. Bliss, Tex.
Foster, Frederick, 75 Cebada St., El Paso, Tex.
Foster, Stanley, 1111 W. Shownshownee St., Pasco, Wash.
Fraser, J. P., Jr., 372 McPherson Ave., Birmingham 11, Ala.
Freeman, David G., Abn. Bn., STR., TIS, Ft. Benning, Ga.
Frick, Edwin J., 507th AAA Opns. Det., APO 331, c/o PM, San Francisco, Calif.
Fuller, N. A., 7735 Dolphin, Detroit 28, Mich.
Fuller, William M., 88th Abn. AAA Bn., Cp. Campbell, Ky.
Furlan, James E., 2206 Park, Houston 6, Tex.
Furman, H. W. C., Hq., 11th Abn. Div. Arty., Cp. Campbell, Ky.
Gagnon, N. C., 22d AAA AW Bn., APO 331, c/o PM, San Francisco, Calif.
Gaines, James S., 60th AAA AW Bn., Ft. Scott, Calif.
Gambrell, Al., Box 469, Greenwood, S. C.
Gammon, E. A., Btry. A, 95th AAA Gun Bn., Ft. Lewis, Wash.
Gantt, Richard E., 114-13 141st St., South Ozone Park, L. I., N. Y.
Garrett, Edw. J., Btry. B, 59th AAA AW Bn., Ft. Bliss, Tex.
Garvey, Geo. F., 15 Parkview Pl., Baldwin, N. Y.
Gaudet, A. J., Box 663, Ft. Bliss, Tex.
Geary, John, AF Ln. Pilot Sch., Connally AFB, Waco, Tex.
Geenty, Thos. J., 102 Cedarhill Ave., New Haven, Conn.
Genta, A., 248 Prince George St., North L, Annapolis, Md.
Gertz, N. M., 6627 N. Glenwood Ave., Chicago, Ill.
Gift, John J., 135 S. 14th St., Allentown, Pa.
Gilhooly, Wm. P., C Btry., 67th AAA Gun Bn., Ft. Bliss, Tex.
Gillespie, J. W., Jr., 4th AAA AW Bn., Ft. Meade, Md.
Glenn, Ray, 11th AAA AW Bn., Ft. Lewis, Wash.
Godfrey, H. J., Hq., 59th AAA AW Bn., Ft. Bliss, Tex.
Gontaryk, J. M., Hq., 212th Gp., 120 W. 62d St., New York, N. Y.
Goodman, David, 6559 Greenview, Chicago, Ill.
Goodwin, J. W., 4413 Harvey, Western Springs, Ill.
Gordon, W. A., Jr., 1153 9th Street, Berkeley, Calif.
Gormally, J. F., 18 Main St., Potter Hill, R. I.
Gorman, K. E., 320 Exchange Pl., New Orleans, La.
Grammer, W. C., Btry. D, 867th AAA AW Bn., APO 942, c/o PM, Seattle, Wash.
Grant, James S., Andrews, S. C.
Greene, F. B., Jr., 808 Boundary St., Newberry, S. C.
Greenhalgh, E. C., 2230 Grant Ave., El Paso, Tex.
Greenia, L. J., Btry. B, 59th AAA AW Bn., Ft. Bliss, Tex.
Gregory, F. A., 612 Sierra Rd., El Paso, Tex.
Gremore, W. J., 443d AAA AW Bn., Ft. Bliss, Tex.
Gresham, Wm. J., Jefferson St., Washington, Ga.
Griffin, Joseph T., Jr., 117 Voorhies Ave., Rockville Centre, N. Y.
Griffin, Marvin R., S. Cambridge St., Ninety-Six, S. C.
Griffin, Henry, Btry. A., 21st AAA AW Bn., Ft. Bliss, Tex.
Groh, D. M., 833 Harmon Rd., Penfield, N. Y.
Grooms, Richard K., Seaman, Ohio.
Guglielmino. L. E., 92 San Pablo Ave., San Francisco, Calif.
Hall, R. J., Jr., 12 Hempstead Ave., Rockville Centre, N. Y.
Hall, L., Box 759, Hazard, Ky.
Halloran, J. V., Hq., Western AAAC, Hamilton AFB, Calif.
Hamer, Jos. E., 6425 Clement Ave., South Tacoma, Wash.
Hamilton, K. L., Btry. B, 507th AAA AW Bn, APO 929, c/o PM, San Francisco, Calif.
Hampton, K. R., Btry. A, 867th AAA AW Bn., APO 942, c/o PM, Seattle, Wash.
Hamscher, G. M., 88th Abn. AA Bn., Ft. Bliss, Tex.
Hanneke, I. H., 65th AAA Gun Bn., APO 331, c/o PM, San Francisco, Calif.
Hannis, Eugene A., 626 Capitol St., Vallejo, Calif.
Hannon, L. K., Stu. Det., Army Lang. Sch., Presidio of Monterey, Calif.
Hansen, E. H., Box 953, Balboa Island, Calif.
Hansen, Robt., Naples, Idaho.
Harden, Wm. H., Qtrs. 548-B, Ft. Bliss, Tex.
Harper, N. M., Box 786, Florence, S. C.
Harris, H. L., Btry. D, 4th AAA AW Bn., Ft. Meade, Md.
Harris, W. P., 114 Court House, Jacksonville, Fla.
Harris, Wm. W., Btry. B, 30th AAA AW Bn., Ft. Custer, Mich.
Harry, J. F., Btry. A, 59th AAA AW Bn., Ft. Bliss, Tex.
Hart, A. C., 867th AAA AW Bn., APO 942, c/o PM, Seattle, Wash.
Hart, B. W., 223 Smith St., Marianna, Fla.
Harty, P. H., 97th AAA Gp., APO 331, c/o PM, San Francisco, Calif.
Hatch, C. W., Jr., 2125 Roosevelt Ave., Berkeley, Calif.
Hathaway, C. T., Btry. B, 82d AAA AW Bn., Ft. Lewis, Wash.
Hayden, J. L., 3312 Polk Ave., El Paso, Tex.
Hayes, D. R., 95th AAA Gun Bn., Ft. Lewis, Wash.
Haynes, F. A., 34th AAA AW Bn., Ft. Bliss, Tex.
Healy, M. J., 503d Opns. Det., Ft. Meade, Md.
Heard, W. S., Jr., Box 886, Ft. Bliss, Tex.
Hearn, N. P., 81 Thatcher St., Atteboro, Mass.
Hellmuth, J. G., 3932 Mil Rd., N.W., Washington, D. C.
Hemenway, R. W., Stu. Det., AA and GM Br., TAS, Ft. Bliss, Tex.
Hester, L. B., 93 Cypress Ave., Vallejo, Calif.
Hewlett, P. B., 39 Montana St., San Francisco, Calif.
Hickey, D. W., III, 70th AAA Gun Bn., Ft. Meade, Md.
Hill, E. B., Btry. A, 92d AAA AW Bn, APO 201, c/o PM, San Francisco, Calif.
Hitchcock, J. W., 69th AAA AW Gun Bn., Ft. Devens, Mass.
Hodges, M. B., Statesboro, Ga.
Hoff, A.P., 404 Holly Ave., St. Paul, Minn.
Hoff, F. E., Btry. C, 79th AAA Gun Bn., Ft. Custer, Mich.
Hofmann, W. A., Btry. D, 30th AAA AW Bn., Ft. Custer, Mich.
Holden, H., 731 Spruce Ave., Pacific Grove, Calif.
Hollerbach, J. T., 443d AAA AW Bn., Ft. Devens, Mass.
Holton, K. A., Rt. 4, Logansport, Ind.
Hopkins, W. L., 346 Stanford Ave., Menlo Park, Calif.
Horne, P. E., 61 Colburn St., North Attleboro, Mass.
Hostetter, E. D., Btry. D, 867th AAA AW Bn., APO 942, c/o PM, Seattle, Wash.
Hubble, P. C., 500th AAA Opns. Det., Ft. Ord, Calif.
Humble, J., Jr., 814 Lone St., Kennewick, Wash.
Hunt, C. E., Sr., 308 Richards Bldg., Tulsa, Okla.
Hunter, J. G., 33 Pinecrest Pkwy., Wilmington, N. C.
Hurst, R. P., C-29th AAA AW Bn., APO 994, c/o PM, San Francisco, Calif.
Hutchinson, L. J., Rt. 2, Box 45-A, Elsinore, Calif.
Hutter, J. W., 482 E. 20th, Hialeah, Fla.
Hyatt, N. E., 305 Birmingham Ave., Wilmington, Del.
Inskeep, J. H. W., Btry. A, 88th Abn. AA Bn., Ft. Bliss, Tex.
Irby, E. W., Oakland, Miss.
Irland, F., 5948 Winthrop St., Chicago, Ill.
Irwin, J. G., 1852 Columbia Rd., N.W., Washington, D. C.
Jackman, Chas. M., 220 Suburban Pkwy., Oakland Beach, R. I.
Jastrzembeki, J. R., 1509 N. Mesa Ave., El Paso, Tex.
Johns, C. N., Qtrs. 1072-C, Ft. Bliss, Tex.
Johnson, D. F., 26 Reese St., Elberton, Ga.
Johnson, Donald C., 443d AAA AW Bn., Ft. Devens, Mass.
Johnson, R. E., 4915 Deal Dr., S.E., Washington, D. C.
Johnson, Raymond G., 443d AAA AW Bn., Ft. Devens, Mass.
Johnson, R. H., 41st AAA Gun Bn., Ft. Bliss, Tex.
Johnston, T. E., 39th AAA AW Bn., Ft. Meade, Md.
Johnstone, R. H., 4th AAA AW Bn., Ft. Meade, Md.
Jones, F. G., Jr., 1060 Wolfe St., Jacksonville, Fla.
Jones, J. W., Jr., 753d AAA Gun Bn., APO 919, c/o PM, San Francisco, Calif.
Jones, S., 2314 Basset Ave., El Paso, Tex.
Jones, T. H., Btry. C, 59th AAA AW Bn., Ft. Bliss, Tex.
Jordan, O. R., 2411 Copper St., El Paso, Tex.
Jorgensen, K., 13642 Military Rd., Seattle, Wash.
Junkin, R. A., Box 1731, Greenville, S. C.
Kaminski, M., Btry B, 21st AAA AW Bn., Ft. Bliss, Tex.
Kaufman, P., Qtrs. 5606, Ft. Bliss, Tex.
Kecskemety, J., 867th AAA AW Bn., APO 942, c/o PM, Seattle, Wash.
Keena, E. J., 141 Bond St., Hartford, Conn.
Keith, J. B., Jr., Statesboro, Ga.
Keller, G., Btry. B, 82d AAA AW Bn., APO 248, c/o PM, San Francisco, Calif.
Kelly, T. M., 41st AAA AW Gun Bn., Ft. Bliss, Tex.
Kelso, M. L., Btry. B, 518th AAA Gun Bn., North Richland, Wash.
Kendall, R. E., 3243 Mills Acres, Flint, Mich.
Kerlin, J. I., Btry. C, 4th AAA AW Bn., Ft. Meade, Md.
Kershinar, L. P., Box 20, Ft. Bliss, Tex.
Kilcullen, E. P., Hq., 226th AAA Gp., Ft. Bliss, Tex.
Kimball, R. E., Camp Street RR 1, Hyannis, Mass.
Kindick, C. M., 65th AAA Gun Bn., APO 331, c/o PM, San Francisco, Calif.
Kinkead, W. W., Hq. Btry., 39th AAA AW Bn., Ft. Meade, Md.
Kinnear, J. B., Btry. B, 4th AAA AW Bn., Ft. Meade, Md.
Kinnebrew, W. T., 3891 N.W. 4th Terrace, Miami, Fla.
Klenik, R. L., Box 853, Ft. Bliss, Tex.
Klerekoper, M. R., 41st AAA Gun Bn., Ft. Bliss, Tex.
Klespis, A. J., 41st AAA Gun Bn., Ft. Bliss, Tex.
Kneckel, W. F., 145 Culver Rd., Rochester, N. Y.
Knill, L. M., Rt. 2, Box 204, Arvada, Colo.
Kukla, S. W., 1712 N. Artesian Ave., Chicago, Ill.
Ladd, M., 4720 W. 13th St., Cicero, Ill.
Lane, A. P., Btry. A, 65th AAA Gun Bn., APO 331, c/o PM, San Francisco, Calif.
Langer, R. G., 120 Floral Blvd., Floral Park, L. I., N.Y.
Lanseadel, R. J., 71st AAA Gun Bn., Ft. Belvoir, Va.
Latimer, H. D., Btry. B, 88th Abn. AA Bn., Cp. Campbell, Ky.
Lawton, F. R., 710 E. 7th St., Brooklyn, N. Y.
Lawton, J., York, S. C.
Lay, J. S., 70th AAA Gun Bn., Ft. Meade, Md.

Leaken, R. M., 22d AAA AW Bn., APO 331, c/o PM, San Francisco, Calif.
Leandee, R. W., 7 Wachusett St., Worchester, Mass.
Lee, W. F., Jr., W. Robt. Toombs Ave., Washington, Ga.
Leonard, R. T., Hq., 19th AAA Gp., Ft. Meade, Md.
Lester, J. C., Rt. 4, Newberry, S. C.
Lethco, T. D., 4534 Mission St., San Francisco, Calif.
Lewis, Chas. R., Hq., 250th AAA Gp., Ft. Lewis, Wash.
Lewis, J. D., Btry. D, 59th AAA AW Bn., Ft. Bliss, Tex.
Lichtenegger, S., Hq., 39th AAA AW Bn., Ft. Meade, Md.
Lienhart, A. J., Btry. D, 768th AAA AW Bn., Williamston, S. C.
Lindh, L. J., 5940 N. Talman Ave., Chicago, Ill.
Lines, C. P., 61 Roselle Park, N. J.
Linnell, W. L., 510 24th Ave., San Francisco, Calif.
Litvin, M., 755 S. 60th St., Philadelphia, Pa.
Lodle, E. G., Box 865, Ft. Bliss, Tex.
Logan, M. M., Btry. C, 764th AAA Gun Bn., Ft. Clayton, Canal Zone.
Long, W. T., 65th AAA Gun Bn., APO 331, c/o PM, San Francisco, Calif.
Longman, W. M., 2355 Leavenworth, St., San Francisco, Calif.
Lonning, T. G., 1416 R St., N.W., Washington, D. C.
Loud, A. W., Haverhill St., N., Reading, Mass.
Loving, W. H., 251 Adams St., Oakland, Calif.
Ludlow, D. E., Hq., 226th AAA Gp., Ft. Bliss, Tex.
Luebbe, C. L., 2753 Shafer Ave., Cincinnati, Ohio.
Lukas, C. T., 92d AAA AW Bn., APO 201, Unit 3, c/o PM, San Francisco, Calif.
Lumpkin, R. G., 4100 La Puz St., El Paso, Tex.
Lynch, J. J., 16 Fourteenth Ave., Haverhill, Mass.
Lynch, M. J., 31548 Alpena Ct., Wayne, Mich.
Lyon, M. E., 4245 Fletcher Ave., Indianapolis, Ind.
McBroom, E. T., Box 426, Canton, Ill.
McCaughey, N. W., 69th AAA AW Gun Bn., Ft. Bliss, Tex.
McClaflin, F. L., 753d AAA Gun Bn., APO 919, c/o PM, San Francisco, Calif.
McClelland, D. J., Hq., 78th AAA Gun Bn., Ft. Lewis, Wash.
McCloskey, J. W., Box 994, Ft. Bliss, Tex.
McCoy, R. W., Hq. & Hq. Btry., 75th AAA Gun Bn., Ft. Meade, Md.
McCray, D. J., 169 Belmont Ave., Newark, N. J.
McDermott, J. P., Btry. A., 39th AAA AW Bn., Ft. Meade, Md.
McFarland, R. R., Qtrs. 418-B, Ft. Bliss, Tex.
McGovern, T. F., Btry B., 39th AAA AW Bn., Ft. Meade, Md.
McGuire, L. A., 957 Manton Ave., Providence, R. I.
McIlwee, J. B., 1160 Cotton Ave., El Paso, Tex.
McIntyre, W., Hq., 503 Abn. AA Bn., Ft. Bragg, N. C.
McKim, J. D., 3311 Federal St., Camden, N. J.
McMartin, G. M., Hq. Btry., 39th AAA AW Bn., Ft. Meade, Md.
McNamee, R. W., Jr., 67 Drexelbrook Dr., Drexel Hill, Pa.
McNeil, Wm. R., D-96th AAA Gun Bn., Ft. Richardson, Alaska.
MacHott, H. E., A-29th AAA AW Bn., APO 902, c/o PM, San Francisco, Calif.
Mackie, W. R., 1304 Armstrong, Bartlesville, Okla.
Maffei, M. A., 71st AAA Gun Bn., Ft. Belvoir, Va.
Magruder, V. E., AA & GM Br., TAS, Ft. Bliss, Tex.
Major, W., 1511 Highland, Camden, S. C.
Malone, M. J., 78th AAA Gun Bn., Ft. Lewis, Wash.
Manske, R. F., 15 Belgrad St., Rochester, N. Y.
Marcotte, W. E., Rt. 1, Wood Pond Rd., West Hartford, Conn.
Marcyes, P. F., 4054th ASU, Ft. Bliss, Tex.
Margid, R., 2425 St. George St., Los Angeles, Calif.
Marks, L. E., 177 S. Cooper St., Memphis, Tenn.
Maroe, G. M., 711 W. 29th St., Vancouver, Wash.
Marshall, F. T., 408 N. James St., Newport, Del.
Martell, D. L., 79th AAA Gun Bn., Ft. Custer, Mich.
Martell, W. C., 75th AAA Gun Bn., Ft. Meade, Md.
Martin, C. W., 69th AAA Gun Bn., Ft. Bliss, Tex.
Martin, C., 4309 Sheppard Ave., El Paso, Tex.
Martin, R. P., 845 N.E. 109th Ave., Portland, Ore.
Marvel, H. D., 515 W. Summitt Ave., Wilmington, Del.
Marzari, G. J., Rt. 1, Bessemer, Mich.
Matejov, S. A., Btry. A, 65th AAA AW Bn., APO 660, c/o PM, San Francisco, Calif.
Matsche, J. F., Btry. A, 65th AAA Gun Bn., APO 331, c/o PM, San Francisco, Calif.
Mayer, M. W., Hq., 19th AAA Gp., Ft. Meade, Md.
Mayes, L. S., 8th AAA AW Bn., Ft. Custer, Mich.
Meinhardt, H. T., 1158 W. Montana St., Chicago, Ill.
Mendenhall, F. E., Jr., 1815 Whitehall, Harrisburg, Pa.
Meola, R. A., Jr., 4th AAA AW Bn., Ft. Meade, Md.
Metzcar, R. M., Cas. Off. Per. Cen., Cp. Stoneman, Calif.
Meyer, C. A., Hq., 10th AAA Gp., Ft. Lewis, Wash.
Meyer, D. W., 78th AAA Gun Bn., Ft. Lewis, Wash.
Meyer, H. E., 5255 N. Kimball, Chicago, Ill.
Meyer, H. W., 22d AAA AW Bn., APO 331, c/o PM, San Francisco, Calif.
Michaux, C. L., Jr., 212 Woodlawn Ave., Buffalo, N. Y.
Migaldi, F. L., 4852 Sheridan Rd., Chicago, Ill.
Mihaldnic, P., 1701 New Hampshire Ave., N.W., Washington, D. C.
Millan, L. C., Qtrs. 171-A, Ft. Lewis, Wash.
Mintz, F., 76th AAA AW Bn., APO 323, c/o PM, San Francisco, Calif.
Mitchell, W. L., 3463d Tng. Sqdn., Ft. Francis E. Warren, Wyo.
Modaffari, J. H., 5 Elizabeth Pl., Rochester, N. Y.
Mooers, S. R., 69th AAA Gun Bn., Ft. Bliss, Tex.
Moore, E. C., 4445 Coyle St., Houston, Tex.
Moore, J. K., 507th AAA AW Bn., APO 929, c/o PM, San Francisco, Calif.
Moore, R. E., 3125 N.W. Luzon, Portland, Ore.
Moore, W. D., 8115 Svc. Det., APO 331, c/o PM., San Francisco, Calif.
Moose, H. E., 2206 Mower St., Newberry, S. C.
Morden, C. V., 35th AAA Brig., Ft. Meade, Md.
Morgan, D., 62d AAA AW Bn., Cp. Hood, Tex.
Morgan, W. L., Btry. A, 48th AAA AW Bn, APO 403, c/o PM, New York, N. Y.
Morrison, R. C., 226 Pennsylvania Ave., Lebanon, Tenn.
Morrow, J. G., Btry. C, 867th AAA AW Bn., APO 942, c/o PM, Seattle, Wash.
Morton, M. M., Btry. C, 867th AAA AW Bn., APO 942, c/o PM, Seattle, Wash.
Most, S., 655 E. 14th St., New York, N. Y.
Moyer, J. H., 1230 Sylvan Ave., Haddon Heights, N. J.
Mullineaux, J. B., Jr., Rt. 6, Lancaster, S. C.
Munguia, R. V., AA & GM Br., TAS, Ft. Bliss, Tex.
Munro, J. A., 557 Maple Ave., Audubon, N. J.
Munroe, R. H., Btry. C, 11th AAA AW Bn., Ft. Lewis, Wash.
Munson, V. V. F., Rt. 1, Olean, N. Y.
Murawski, T. O., 68th AAA Gun Bn., Ft. Lewis, Wash.
Murphy, W. J., 62d AAA AW Bn., Cp. Hood, Tex.
Murray, C. M., 59th AAA AW Bn., Ft. Bliss, Tex.
Murray, Chas. W., AOAC No. 2, Stu. Det. "C," Ft. Sill, Okla.
Myers, R. L., Jr., 4526 Westmoreland Ct., Riverside, Calif.
Myers, W. L., Ft. Smith Armory, Arcadia, Fla.
Myers, W. R., Box 677, Radford, Va.
Nelson, R. V., 17717 Harlan, East Detroit, Mich.
Neuer, A., 446 Kingston Ave., Brooklyn, N. Y.
Nolan, A. J., 2709 Goodwood Rd., Baltimore, Md.
Nolde, C. A., 369 Bellaire Dr., New Orleans, La.
Normile, K., 2032 Seward St., Evanston, Ill.
Northway, P. E., 14 Winn St., Woburn, Mass.
Oakley, W. S., 88th Abn. AA Bn., Ft. Bliss, Tex.
O'Connell, F. J., 417 Locust Dr., Baltimore, Md.
O'Connor, T., 69th AAA Gun Bn., Ft. Bliss, Tex.
Odom, A. M., Ft. Myers, Fla.
O'Donnell, J. N., AOAC, Ft. Sill, Okla.
Oelschlaeger, W. E., 75th AAA Gun Bn., Ft. Meade, Md.
O'Gwynn, P. D., 79th AAA Gun Bn., Ft. Custer, Mich.
Olson, C. W., 39th AAA AW Bn., Ft. Meade, Md.
Olson, H. C., Btry. A, 865th AAA AW Bn., APO 7, c/o PM, San Francisco, Calif.
Osserman, H. H., 60th AAA AW Bn., Ft. Ord, Calif.
Ostrom, E., 78th AAA Gun Bn., Ft. Lewis, Wash.
O'Sullivan, D. P., 33-26 85th St., Jackson Heights, N. Y.
Otterboug, C. R., 35th AAA Brig., Ft. Meade, Md.
Ottovich, L., 5659 Carberry Ave., Oakland, Calif.
Palmer, N. S., 118 S. Yelm St., Kennewick, Wash.
Palmer, P., Jr., USS *Antietan*, FPO, c/o PM, San Francisco, Calif.
Papatones, A. J., 79th AAA Gun Bn., Ft. Custer, Mich.
Paporozzi, L. M., 15 New St., Lodi, N. J.
Parker, F. C., III, Advanced Courses, Ft. Sill, Okla.
Parker, Wm. R., 604 S. 18th, Laramie, Wyo.
Parrish, C., 22d AAA AW Bn., APO 331, c/o PM, San Francisco, Calif.
Patterson, D. F., 225 Perry, Beaumont, Tex.
Patraitis, G. A., 5726 S. Honore, Chicago, Ill.
Paul, R. N., RFD, Ely, Vt.
Pauley, D., 79th AAA Gun Bn., Ft. Custer, Mich.
Paull, W. H., 119 Wood St., Catasuqua, Pa.
Payne, R. F., 14th FA Bn., Cp. Hood, Tex.
Pendergraft, W. R., Jr., 78th AAA Gun Bn., Ft. Lewis, Wash.
Pennock, J. S., 1410 Spring St., Little Rock, Ark.
Pepin, E. A., 19th AAA Gp., Ft. Meade, Md.
Perlman, C. S., 2937 W. Buena Vista, Detroit, Mich.
Pettiford, S. E., Btry. B, 933d AAA AW Bn., APO 994, c/o PM, San Francisco, Calif.
Phillipsen, E. R., Qtrs. 548-A, Ft. Bliss, Tex.
Pickering, H. D., 71st AAA Gun Bn., Ft. Belvoir, Va.
Piribek, J., 22d AAA AW Bn., APO 331, c/o PM, San Francisco, Calif.
Pitcher, A. C., 9131 85th St., Woodhaven, L. I., N. Y.
Pitsch, R. E., 1046 Chicago Ave., Oak Park, Ill.
Pohl, R. W., 3404 Exposition Rd., Austin, Tex.
Pollack, H., 6814 Quincy St., Philadelphia, Pa.
Pooser, M., Clerk's Box, Post Office, Arcadia, Fla.
Porter, G. J., 95th AAA Gun Bn., Ft. Lewis, Wash.
Powell, R. K., Box 507, Salem, Ore.
Powers, G. H., 22d AAA AW Bn., APO 331, c/o PM, San Francisco, Calif.
Price, J. E., Jr., 867th AAA AW Bn., APO 942, c/o PM, Seattle, Wash.
Pride, R., 79th AAA Gun Bn., Ft. Custer, Mich.
Propst, C. H., 69th AAA Gun Bn., Ft. Bliss, Tex.
Pryor, B. H., 297 Franklin St., Athens, Ga.
Pulliam, P. E., 3 West Blvd., S., Columbia, Mo.
Rafter, W. E., 40th AAA Brig., APO 503, c/o PM, San Francisco, Calif.
Raineault, C. G., 867th AAA AW Bn., APO 943, c/o PM, Seattle, Wash.
Randolph, W. A., 34th AAA AW Bn., Ft. Bliss, Tex.
Rapp, R. M., Jr., 17618 Ingleside Rd., Cleveland, Ohio.
Ray, H. D., 117 Heard St., Elberton, Ga.
Raymond, D. F., 390 West Ave., Harrahan, La
Rebisz, C. 710 S. James St., Rome, N. Y.
Redford, Jas. C., 443d AAA AW Bn., Ft. Devens, Mass.
Rehfuss, J. W., 1234 N. Pulaski Rd., Chicago, Ill.

Rehm, E. R., 108 Ballard Pl., Seattle, Wash.
Rehm, W. R., 21st AAA AW Bn., Ft. Bliss, Tex.
Reidy, W. J., 68th AAA Gun Bn., Ft. Lewis, Wash.
Reitz, L. A., 2509 S. Oaswego, Tulsa, Okla.
Respess, R. B., 109 17th St., N.E., Atlanta, Ga.
Reuter, P. W., Jr., 906 Whitehead St., Key West, Fla.
Richards, W. S., 95th AAA Gun Bn., Ft. Lewis, Wash.
Ridlehoover, E. M., 4th AAA AW Bn., Ft. Meade, Md.
Ring, K. G., 95th AAA Gun Bn., Ft. Lewis, Wash.
Rivera, R., Box 44, Vieques, Puerto Rico.
Robinson, E., Box 100, Harmony, R. I.
Rodenbeck, E. O., 4th AAA AW Bn., Ft. Meade, Md.
Rodgers, E. C., 3410 Franklin St., El Paso, Tex.
Rodgers, F. T., 5 Benefit St., Westerly, R. I.
Roller, H. N., 19th AAA Gp., Ft. Meade, Md.
Rollins, E. L., 8317 S. Claiborne Ave., New Orleans, La.
Rose, R. J., 41st AAA Gun Bn., Ft. Bliss, Tex.
Rosskopf, J. K., 10th AAA Gp., Ft. Lewis, Wash.
Rotureau, N. P., 106 W. Cervantes St., Pensacola, Fla.
Rountree, P., Chipley, Fla.
Rowe, E. L., 141 W. Broadmoor Blvd., San Lenora, Calif.
Ruebling, R. L., 608 Fairfield Circle, Westfield, N. J.
Russell, J. N., 1316 N. 4th St., Temple, Tex.
Ryan, D. P., 60th AAA AW Bn., Ft. Ord, Calif.
Ryan, T. J., 62d AAA AW Bn., Cp. Hood, Tex.
Rybikowsky, J. A., 612 D St., N.E., Washington, D. C.
Sackheim, S. P., 821 Bronx River Rd., Bronxville, N. Y.
Sadler, J. A., 39th AAA AW Bn., Ft. Meade, Md.
Sage, G. B., Jr., 15th AAA AW Bn., Ft. Lewis, Wash.
Sanborn, H. F., 11th AAA AW Bn., Ft. Lewis, Wash.
Sansom, J. F., 59th AAA AW Bn., Ft. Bliss, Tex.
Scarborough, S. T., 228 N. Auburndale St., Memphis, Tenn.
Schelles, Z. C., 103 N. Woodrow Ave., Battle Creek, Mich.
Schierenbeck, A. E., Box 180, USA Crib. Sch., Ft. Gullick, Canal Zone.
Schmutz, J. W., 4725 Ledge Ave., North Hollywood, Calif.
Schofield, J. B., 39th AAA AW Bn., Ft. Meade, Md.
Schott, A. A., 2412 Bryn Mawr Ave., Chicago, Ill.
Schwind, G. R., Firetown Rd., Simsbury, Conn.
Scott, C. E., Crescent Rd., Fairport, N. Y.
Seabrook, P. D., 50 Newman Circle, Clemson, S. C.
Seale, N. C., Box 1023, Pensacola, Fla.
Secskas, E. C., 960 Hancock Ave., Bridgeport, Conn.
Seramur, Paul L., 3593 Union St., San Diego, Calif.
Shaw, F. W., 70th AAA Gun Bn., Ft. Meade, Md.
Sheffield, R. X., 4th AAA AW Bn., Ft. Meade, Md.
Shelhorse, G. L., Qtrs. 550-C, Ft. Bliss, Tex.
Sheppard, B. E., ATD, TAS, Ft. Bliss, Okla.
Sherblom, H. G., 69th AAA Gun Bn., Ft. Bliss, Tex.
Sherman, R., 75th AAA Gun Bn., Ft. Meade, Md.
Sherwin, A. 135 Wildwood Ave., Victoria B. C., Canada.
Shuflata, G. J., Jr., 518th AAA Gun Bn., North Rickland, Wash.
Siemen, R. F., 337 Delaware Circle, Newark, Del.
Silbersien, A. P., 34th FA Bn., Ft. Dix, N. J.
Silver, M. H., 6211 S.W., 21st St., Miami, Fla.
Sinderman, M. L., 322½ Kennewick Ave., Kennewick, Wash.
Sissons, E. A., 145 Culver Rd., Rochester, N. Y.
Siwula, T. A., 369 Watson St., Akron, Ohio.
Shelnik, R. J., 5338 W. Foster Ave., Chicago, Ill.
Skinner, A. J., Box 23, Flemington, N. J.
Slade, S. B., 230 N. Eufaula St., Eufaula, Ala.
Small, A. L., 909 Myrtle Ave., El Paso, Tex.
Smith, D. E., 68th AAA Gun Bn., Ft. Lewis, Wash.
Smith, D. H., 502d AAA Opns. Det., Ft. Custer, Mich.
Smith, E. A., 95th AAA Gun Bn., Ft. Lewis, Wash.
Smith, H. J., 4183 Devonshire, Detroit, Mich.
Smith, H. J., 1331 S. Oxford Rd., Grosse Point, Woods, Mich.
Smith, H. R., 3521 High St., Oakland, Calif.
Smith, W. E., 518 AAA Gun Bn., North Richland, Wash.
Snider, R., 21st AAA AW Bn., Ft. Bliss, Tex.
Somers, L. W., 21st AAA AW Bn., Ft. Bliss, Tex.
Sorrels, A. I., 441st CIC Det., APO 500, c/o PM, San Francisco, Calif.
Soucy, R. H., Queens Ave., West Warwick, R. I.
Sovitski, C., 867th AAA AW Bn., APO 942, c/o PM, Seattle, Wash.
Spetz, A. B., 1199 Plymouth Ave., S., Rochester, N. Y.
Spielman, G. L., Triumph, Minn.
Sprague, E. L., 65th AAA Gun Bn., APO 331, c/o PM, San Francisco, Calif.
Standish, H. H., 625 Larch Ave., S., San Francisco, Calif.
Stanley, L. A., Jr., Alberta Farms, Rt. 1, Clayton, Del.
Stanley, W. G., Box 64, Fremont, N. C.
Stark, D. S., Jr., 68th AAA Gun Bn., Ft. Lewis, Wash.
Starr, W. R., Citizens State Bank, Hiawatha, Kan.
Stevens, W., Btry. B, 88th Abn. AA Bn., Cp. Campbell, Ky.
Stevenson, J. R., 86 Whitman Rd., Rochester, N. Y.
Steward, W. H., Jr., 11th AAA AW Bn., Ft. Lewis, Wash.
Stewart, B. A., 1649 W. Farwell St., Chicago, Ill.
Stewart, D. L., 68th AAA Gun Bn., Ft. Lewis, Wash.
Stine, K. E., 142 Broadway, Hanover, Pa.
Stine, O. B., 438 W. Briar Pl., Chicago, Ill.
Stogner, H. D., 88th Abn. AA Bn., Cp. Campbell, Ky.
Stoker, L. D., 22d AAA AW Bn., APO 331, c/o PM, San Francisco, Calif.
Storm, R. W., AA & GM Cen., Ft. Bliss, Tex.
Stowem, James E., Eastanollee, Ga.
Stratychuck, W. O., 2922 Queen Ave., Dearborn, Mich.
Sullivan, F. J., Rt. 2, Watervliet, N. Y.
Sullivan, W. F., 753d AAA Gun Bn., APO 919, c/o PM, San Francisco, Calif.
Suttmann, O. T., 2900 W. 2d St., Dayton, Ohio.
Swain, J. W., 70th AAA Gun Bn., Ft. Meade, Md.
Sweeney, W. J., 715 Marshall Rd., Rochester, N. Y.
Swieckowski, S. A., 41st AAA Gun Bn., Ft. Bliss, Tex.
Tanner, R. C., 24 Arlington St., Rochester, N. Y.
Taylor R. W., 60th AAA AW Bn., Ft. Scott, Calif.
Terry, W. H., 65th AAA Gun Bn., APO 331, c/o PM, San Francisco, Calif.
Tesche, W. C., Qtrs. 5624, Ft. Bliss, Tex.
Teschendorf, M. C., 1822 Fruivale Ave., Oakland, Calif.
Thomas, N. A., 2419 Waters Ave., Savannah, Ga.
Thomas, R. O., 2550 Louisiana St., Sacramento, Calif.
Thompson, C. R., 220 W. 12th St., Port Angeles, Wash.
Thornton, H. L., Rt. 1, Elberton, Ga.
Thornton, S. B., Jr., 95th AAA Gun Bn., Ft. Lewis, Wash.
Tierney, R. E., 2683 Marion Ave., Bronx, N. Y.
Tierney, R. H., 120 Kensington Dr., Utica, N. Y.
Tighe, J. J., C-50th AAA AW Bn., APO 909, c/o PM, San Francisco, Calif.
Title, S. H., 39th AAA AW Bn., Ft. Meade, Md.
Tolbert, C. C., 32d AAA AW Bn., Ft. Bliss, Tex.
Tomlinson, F., 503d Abn. AA Bn., Ft. Bragg, N. C.
Toms, G. E., 19th AAA Gp., Ft. Meade, Md.
Towles, W. P., Jr., 2020 Jarrel, Tyler, Tex.
Tumblin, G. A., 102 Holland St., Clinton, S. C.
Turch, H. C., 68th AAA Gun Bn., APO 660, c/o PM, San Francisco, Calif.
Turner, J. S. R., 911 Edgerly Rd., Glen Burnie, Md.
Tuscany, F., 21st AAA AW Bn., Ft. Bliss, Tex.
Tuttle, C. F., CIC Cen., Ft. Holabird, Md.
Tyree, J. H., 518th AAA Gun Bn., North Richland, Wash.
Underwood, B. L., 1217 Lupton Dr., Chattanooga, Tenn.
Vaden, F. L., Div. Arty. Hq., Cp. Hood, Tex.
Valle, M. A., Jr., 22d AAA AW Bn., APO 331, c/o PM, San Francisco, Calif.
Van Orman, G. A., 50th AAA AW Bn., Ft. Bliss, Tex.
Van't Veld, H. J., 2909 Q St., N.W., Washington, D. C.
Verburg, K. B., 11th AAA Gp., Ft. Bliss, Tex.
Voelkel, M. G., 145 Culver Rd., Rochester, N. Y.
Vogt, B. L., 59th AAA AW Bn., Ft. Bliss, Tex.
Vranish, R. L., 88th Abn. AA Bn., Cp. Campbell, Ky.
Wadkins, R. J., 816 Joplin National Bank Bldg., Joplin, Mo.
Wadley, H. L., 938 N. St. Johns Ave., Highland Park, Ill.
Wagner, G. A., 37 Signal Hill Blvd., East St. Louis, Ill.
Wagner, R., Box 1375, Ft. Bliss, Tex.
Walker, G. H., Jr., Peakham Rd., Sudbury, Mass.
Walker, H. R., 65th AAA Gun Bn., APO 331, c/o PM, San Francisco, Calif.
Walker, J. W., 62 Payson Ave., Audubon, N. J.
Walsh, C. S., 1428 E. Capitol Dr., Milwaukee, Wis.
Walter, G. F., Fullerton, Md.
Ward, J. W., Atmore, Ala.
Warning, 753d AAA Gun Bn., APO 919, c/o PM, San Francisco, Calif.
Watts, B. B., Box 1400, Ft. Bliss, Tex.
Wayman, J. D., 4724 W. Grace St., Chicago, Ill.
Weaver, F. J., 59th AAA AW Bn., Ft. Bliss, Tex.
Weaver, O. S., 54th Trans. Trk. Bn., Ft. Story, Va.
Weaver, W. W., 4300 Pershing Dr., El Paso, Tex.
Webb, J. W., Rt. 1, Crestview, Fla.
Webb, L. E., 21st AAA AW Bn., Ft. Bliss, Tex.
Webster, M. W., 4019½ Piedras St., El Paso, Tex.
Weir, R. H., Jr., 610 Woodside Pkwy., Silver Spring, Md.
Wells, C. C., Jr., 312 Ewing St., Frankfort, Ky.
Wells, L. R., 68th AAA Gun Bn., Ft. Lewis, Wash.
Wells, W. W., Le Roy, Minn.
Welsh, P. J., 660 Greenwood Ave., Chicago, Ill.
Wendling, D. E., 865th AAA AW Bn., APO 7, Unit, 3, c/o PM, San Francisco, Calif.
West, W. L., 5423 55th Pl., East Riverdale, Md.
Weyant, W. W., 4th AAA AW Bn., Ft. Meade, Md.
Whitbread, W. W., 22d AAA AW Bn., APO 331, c/o PM, San Francisco, Calif.
White, C. L., 450th AAA AW Bn., Ft. Ord, Calif.
White, H., 2915 Madera St., El Paso, Tex.
White, L. D., 867th AAA AW Bn., APO 942, c/o PM, Seattle, Wash.
Wick, R. E., 308 E. 2d St., Wabasha, Minn.
Wieringa, J. S., Jr., 88th Abn. AA Bn., Ft. Campbell, Ky.
Wiggins, J. D., 1606 Julia St., Berkeley, Calif.
Wilenius W., 326 Front St., Berea, Ohio.
Wilkins, A. M., 70th AAA Gun Bn., Ft. Meade, Md.
Williams, H. H., 216 Algiers Dr., Sandston, Va.
Williamson, P. E., Hinesville, Ga.
Willis, J. P., AAOC 1, Stu. Det., Ft. Sill, Okla.
Wilson, H. D., 2326 S.W. 21st St., Oklahoma City, Okla.
Wilson, Jack R., 30th AAA AW Bn., Ft. Custer, Mich.
Wilson, Raymond L., Box 37, Ft. Lewis, Wash.
Winstead, F. S., Box 713, Anderson, S. C.
Winter, Edw. J., 5938 162d St., Flushing, N. Y.
Winters, W. W., 507th AAA AW Bn., APO 201, Unit 1, c/o PM, San Francisco, Calif.
Wise, Wm. M., Hq., 226th AAA Gp., Ft. Bliss, Tex.
Wonderland, H. H., 3 Belmar Rd., Hatboro, Pa.
Wood, R. L., Stu. Det., Ft. Sill, Okla.

Wright, Clarence J., 79th AAA Gun Bn., Ft. Custer, Mich.
Yates, R. T., Chipley, Fla.
Yerkes, J. M., Hq., 226th AAA Gp., Ft. Bliss, Tex.
Yost, R. D., 65th AAA Gun Bn., APO 331, c/o PM, San Francisco, Calif.
Young, J., Ill., 867th AAA AW Bn, APO 942, c/o PM, Seattle, Wash.
Zachmann, P. J., 79 Dunning Ave., Webster, N. Y.
Zalenko, T., 22d AAA AW Bn., APO 331, c/o PM, San Francisco, Calif.
Zebrowski, V. J., 97th AAA Gp., APO 331, c/o PM, San Francisco, Calif.
Zenco, J., 127th Kenilworth Rd., Merion, Pa.
Ziemba, T. P., Hq., 8th AAA AW Bn., Sault Ste. Marie, Mich.
Ziemski, F. J., 3227 Savannah St., El Paso, Tex.

SECOND LIEUTENANTS

Abare, R. D., Btry. A., 39th AAA AW Bn., Ft. Meade, Md.
Adams, L. M., Btry. C, 30th AAA AW Bn., Ft. Custer, Mich.
Adams, L. H., RFD 5, Boscawen, N. H.
Alamo, L. P., 1143 Mace Ave., Bronx 67, N. Y.
Alers, A., 57 Emeterio Ramirez St., Mayaguez, Puerto Rico.
Alewine, F. H., RFD 3, Greenwood, S. C.
Allen, E. G., Btry. D, 518th AAA Gun Bn., North Richland, Wash.
Allums, M. M., Btry. C, 8th AAA AW Bn, Ft. Custer, Mich.
Allyn, J. O., 12 Holmes Dale, Albany 3, N. Y.
Amarine, R. E., Btry. A, 865th AAA AW Bn., APO 7, c/o PM, San Francisco, Calif.
Amburgey, G. A., 78th AAA Gun Bn., Ft. Lewis, Wash.
Andrews, W. H., Btry. C, 39th AAA AW Bn., Ft. Meade, Md.
Armitage, G. N., Btry. D, 76th AAA AW Bn., APO 323, c/o PM, San Francisco, Calif.
Austin, W. E., Btry. D, 678th AAA AW Bn., Williamston, S. C.
Avencena, M. C., 2716 30th St., S.E. Washington, D. C.
Bass, B. F., 78th AAA Gun Bn., APO 660, c/o PM, San Francisco, Calif.
Bass, S. A., Rt. 4, Box 222, Pensacola, Fla.
Beam, R. L., C-79th AAA Gun Bn., Ft. Custer, Mich.
Bedell, J. F., C-713th AAA Gun Bn., Cheraw, S. C.
Bedenbaugh, H. M., RFD 2, Prosperity, S. C.
Bell, A. D., Jr., 503d AAA Op. Det., Ft. Meade, Md.
Beninate, L. A., 901 Pelican Ave., Algiers, La.
Beninate, V. N., Rt. 1, Box 710, New Orleans 14, La.
Benjamin, E. L., Jr., 208 Main St., Kerno, Miss.
Bennett, K. F., 21st AAA AW Bn., Ft. Bliss, Tex.
Berger, G. J., 39th AAA AW Bn., Ft. Meade, Md.
Billingsley, Robert, 11 Garrett Rd., Claymont, Del.
Bladen, W. A., 507th AAA AW Bn., APO 929, c/o PM, San Francisco, Calif.
Bogel, J. E., D-70th AAA Gun Bn., Ft. Meade, Md.
Booher, R. C., D-526th AAA Gun Bn., Ft. Bliss, Tex.
Boone, G. O., Gen. Del., Ninety-Six, S. C.
Boykin, C. W., Hq., 59th AAA AW Bn., Ft. Bliss, Tex.
Boylan, F. V., 6014 Spain St., New Orleans, La.
Bradshaw, N. F., 78th AAA Gun Bn., Ft. Lewis, Wash.
Breedlove, A. R., D-39th AAA AW Bn., Ft. Meade, Md.
Brewton, L. R., A-59th AAA AW Bn., Ft. Bliss, Tex.
Briggs, R. D., 99 Colman St., New London, Conn.
Brown, G. C., 9 Walnut Ave., Wilmington 126, Del.
Bunn, W. J., 303 E. Harrison St., Dillon, S. C.
Burch, D. H., 106 Christian St., Cheraw, S. C.
Burnett, J. A., 1st & Cota, Shelton, Wash.
Buttler, T. B., 249 W. Harding Rd., Lombard, Ill.
Callahan, T. P., 811 S. 16th, Manitowac, Wis.
Carroll, J. J., 529 Kenwood Ave., Delmar, N. Y.
Cavender, M. L., A-4th AAA AW Bn., Ft. Meade, Md.
Chalmers, C. M., Box 1731, Greenville, S. C.
Champerlin, Garwood, 810 Rhode Island Ave., N.E., Washington 18, D. C.
Colclough, R. D., 1595 47th Ave., San Francisco, Calif.
Collins, N. G., C-62d AAA AW Bn., Cp. Hood, Tex.
Collins, W. L., C-50th AAA AW Bn., Ft. Bliss, Tex.
Cook, D. C., A-79th AAA Gun Bn., Ft. Custer, Mich.
Cook, J. W., Jr., 1126 Capuchin Ave., Burlingame, Calif.
Cousin, J. T., RFD 1, Oak Grove, South Voventry, Conn.
Cragin, J. M., D-39th AAA AW Bn., Ft. Meade, Md.
Crawford, R. E., A-59th AAA AW Bn., Ft. Bliss, Tex.
Crolley, Edward, Rt. 2, Camden, S. C.
Cronic, H. T., 312 Carolina Ave., Clinton, S. C.
Crubbs, R. J., Westminster, S. C.
Cummings, C. A., 120 W. 62d St., New York 23, N. Y.
Damon, C. E., 233 Eastman St., Concord, N. H.
Darr, J. H., PO Box 31, Ashton, Md.
Davis, J. C., PO Box, 191, Crestview, Fla.
Dearman, H. G., Jr., Box 1731, Greenville, S. C.
Deeley, W. R., C-59th AAA AW Bn., Ft. Bliss, Tex.
De Shan, P. N., 1617 W. 4th St., Wilmington, Del.
Diffenderfer, G. D., 217 4th St., New Cumberland, Md.
Dodge, N. D., 20445 Renfrew, Detroit 21, Mich.
Dolan, E. F., 9345 Yosemite, Detroit 4, Mich.
Donnelly, E. F., 5610 Colorado Ave., N.W., Washington, D. C.
Douglas, Malcolm, 36th AAA AW Bn., Ft. Bliss, Tex.
Downie, R. R., Box 495, Albuquerque, N. M.
Dubois, H. S., 67th AAA Gun Bn., Ft. Bliss, Tex.
Duggan, D. F., D-78th AAA Gun Bn., Ft. Lewis, Wash.
Edenfield, J. O., Swainsboro, Ga.
Elkins, P. M., 1602 W. Wallen Ave., Chicago, Ill.
Ellis, T. G., Jr., 600 E. 2d St., Eureka, Kan.
Elness, L. D., A-30th AAA AW Bn., Ft. Custer, Mich.
Epstein, Abraham, 4023 Clifton St., El Paso, Tex.
Ernst, W. C., 187 Frontenac Heights, Rochester, N. Y.
Etzold, D. E., CG, Hq. & Sv. Gp., GHQ, FEC, APO 500, c/o PM, San Francisco, Calif.
Fairfield, R. T., Dunn Hall, University of Maine, Orono, Maine.
Faust, E. F., 78th AAA Gun Bn., Ft. Lewis, Wash.
Feiger, John W., 753d AAA Gun Bn., APO 919, c/o PM, San Francisco, Calif.
Fifield, G. C., Main St., South Lancaster, Mass.
Fink, Charles 78th AAA Gun Bn., Ft. Lewis, Wash.
Fladmark, L. W., 22d AAA Bn., APO 331, c/o PM, San Francisco, Calif.
Fletcher, L. C., C-79th AAA Gun Bn., Ft. Custer, Mich.
Flitcher, B. J., 229 S. San Jacinto Dr., San Diego, Calif.
Flood, C. J., 394 West Side Drive, Rochester 11, N. Y.
Fowler, H. J., 97th AAA Gp., APO 331, c/o PM, San Francisco, Calif.
Freeman, B. S., Box 92, Texaco, N. M.
Fritz, F. J., Off. Stu. Det., Ft. Bliss, Tex.
Fritz, W. N., 1362 Beaconsfield, Grosse Point Park, Mich.
Gaffney, J. R., 35th AAA Brigade, Ft. Meade, Md.
Gage, D. D., 58 Grant St., Needham 92, Mass.
Gale, A. L., C-39th AAA AW Bn., Ft. Meade, Md.
Garcia, V. V., 34th AAA AW Bn., Ft. Bliss, Tex.
Geller, S. I., D-4th AAA AW Bn., Ft. Meade, Md.
Gibson, E. L., Gen. Del., Yemassee, S. C.
Glandorf, J. H., B-95th AAA Gun Bn., Ft. Lewis, Wash.
Glasby, E. F., D-678th AAA AW Bn., Williamston, S. C.
Gobel, John J., 1921 "G" St., N.W., Washington, D. C.
Gradoville, E. J., C-60th AAA AW Bn., Ft. Ord, Calif.
Grill, H. C., 95th AAA Gun Bn., Ft. Lewis, Wash.
Grimes, J. R., A-26th AAA Bn., APO 24-4, c/o PM, San Francisco, Calif.
Grzeskiewicz, C. T., 844 N. Avers Ave., Chicago, Ill.
Hailey, J. S., AA & GM Br., TAS, Ft. Bliss, Tex.
Hales, W. V., 185 Vernon Ave., Logan, Utah.
Hamel, W. C., 311 Marlborough Rd., Rochester 11, N. Y.
Harbert, G. P., 932 Campbell Village Ct., Oakland, Calif.
Harkins, D. E., 15th AAA AW Bn., Ft. Lewis, Wash.
Harrington, L. E., D-76th AAA Bn., APO 323, c/o PM, San Francisco, Calif.
Harrington, P. W., 142 Colebourne Rd., Rochester, N. Y.
Hayne, J. R., D-76th AAA AW Bn., APO 901, c/o PM, San Francisco, Calif.
Heipler, J. F., 50th AAA AW Bn., Ft. Bliss, Tex.
Henson, V. A., 7655 Barton Drive, El Paso, Tex.
Hess, W. R., A-443d AAA AW Bn., Ft. Devens, Mass.
Higashi, R. Y., TIS, GHQ, FEC, APO 500, c/o PM, San Francisco, Calif.
Hiscock, J. M., AA & GM Br., TAS, Ft. Bliss, Tex.
Hooper, G. J., 65th AAA Gun Bn., APO 331, c/o PM, San Francisco, Calif.
Huckaby, R. O., Box 1263, McGill, Nev.
Huff, C. A., B-79th AAA Gun Bn., Ft. Custer, Mich.
Hughes, D. W., 17th SMRU Det., Ft. Lewis, Wash.
Humby, H. B., 868 North St., Rochester, N. Y.
Hutman, H. F., 627 Randolph St., San Francisco, Calif.
Irons, R. P., 82 Dean Ave., Centerdale 11, R. I.
Jacker, R. W., 80 Auburn St., Rochester, N. Y.
Johnson, H. E., 5130 Connecticut Ave., N.W., Washington, D. C.
Johnson, Jack, 78th AAA Gun Bn., Ft. Lewis, Wash.
Johnson, R. E., 18922 Moross Rd., Detroit, Mich.
Johnson, T. L., 867th AAA AW Bn., APO 942, c/o PM, Seattle, Wash.
Jones, J. W., Jr., York, S. C.
Jordan, E. C., Rt. 2, Box 65, Cowards, S. C.
Jordan, E. S., 3350-B 21st St., San Francisco, Calif.
Jordenson, J. J., Jr., D-95th AAA Gun Bn., Ft. Lewis, Wash.
Josselson, Benjamin, Gen. Del., Yemassee, S. C.
Kahn, H. M., C-4th AAA AW Bn., Ft. Meade, Md.
Kelley, F. A., C-70th AAA Gun Bn., Ft. Meade, Md.
Kelly, C. B., 507th Op. Det., APO 331, c/o PM, San Francisco, Calif.
Kelly, T. L., 126 Kennewick Ave., Pasco, Wash.
Kennedy, Oliver, 1337 Jefferson St., N.W., Washington, D. C.
Kenney, J. D., 1220 W. Jarvis St., Chicago, Ill.
King, J. K., Jr., D-678th AAA AW Bn., Williamston, S. C.
Kirbus, F. A., 1458 E. 204th St., Euclid 17, Ohio.
Korems, K. W., 59th AAA AW Bn., Ft. Bliss, Tex.
Kownacki, S. J., 3304 N. Avers St., Chicago, Ill.
Krekorian, E. A., C-4th AAA AW Bn., Ft. Meade, Md.
Larson, L. R., 4201 22d Ave., S., Minneapolis 7, Minn.
Latimer, J. B., A-867th AAA Bn., APO 942, c/o PM, Seattle, Wash.
Lewis, A. L., A-69th AAA Gun Bn., Ft. Bliss, Tex.
Little, J. E., 71st AAA Gun Bn., Ft. Belvoir, Va.
Lloyd, G. W. 11731 Wyoming, Detroit, Mich.
Lockett, E. W., 1336 St. Ausin St., Detroit 7, Mich.

Lumpkin, H. R., 71st AAA Gun Bn., Ft. Belvoir, Va.
Lund, H. J., C-96th AAA Gun Bn., Ft. Bliss, Tex.
Lunn, Robt. J., 8th AAA AW Bn., Sault Ste. Marie, Mich.
McBean, A. J., 33 George St., North Haven, Conn.
McCoy, P. G., A-88th AAA Bn., Cp Campbell, Ky.
McFadden, G. M., 2326 Bowdoin Ave., Palo Alto, Calif.
McGaughey, Kenneth, 78th AAA Gun Bn., Ft. Lewis, Wash.
McGlinn, E. J., 609 Ottawa St., Leavenworth, Kan.
McGowan, J. E., Agri. Extension Bldg., Athens, Ga.
McKeon, J. P., C-39th AAA AW Bn., Ft. Meade, Md.
McKinley, R. J., 3409 Mountain Ave., El Paso, Tex.
McMillian, H. S., Gen. Del., Hampton, S. C.
MacGowan, H. E., 140 St. Rita Drive, Rochester, N. Y.
MacLean-Kennedy, D., Cas. Off. Co., Cp. Stoneman, Pittsburg, Calif.
Mahan, J. C., 501 40th St., Fairfield, Ala.
Maher, J. P., B-4th AAA AW Bn., Ft. Meade, Md.
Malek, E. R., A-69th AAA Gun Bn., Ft. Bliss, Tex.
Manley, J. K., 341 Rockwood Dr., South San Francisco, Calif.
Matles, S. A., 503d Op. Det., Ft. Meade, Md.
Matthews, A. R., Woodbury Terrace Apts., Woodbury, N. J.
Meaney, L. J., 41st AAA Gun Bn., Ft. Bliss, Tex.
Miley, J. K., 39th AAA AW Bn., Ft. Meade, Md.
Miller, Sam, 75th AAA Gun Bn., Ft. Meade, Md.
Milligan, T. H., 5301 Tchoupitoulas St., New Orleans, La.
Mills, F. A., 211 Murphy Ave., Steubenville, Ohio.
Minto, T. M., 2109 Tremont, El Paso, Tex.
Mitchell, S. O., D-69th AAA Gun Bn., Ft. Lewis, Wash.
Mitchell, T. C., 75th AAA Gun Bn., Ft. Meade, Md.
Morgan, Marion, Hq., 4th AAA AW Bn., Ft. Meade, Md.
Morrell, E. N., 312 Hermosa St., Vallejo, Calif.
Morrison, M. J., 18475 Preeland, Detroit 21, Mich.
Mullens, R. M., B-50th AAA AW Bn., Ft. Bliss, Tex.
Nassar, D. A. Jr., 1445 Bourbon St., New Orleans, La.
Newberry, R. L., Rt. 4, Aghasa Dr., Traverse City, Mich.
Nowak, F. S., A-79th AAA Gun Bn., Ft. Custer, Mich.
Oelschig, A. C., 1612 Skidaway Rd., Savannah, Ga.
Omelich, P. B., Stu. Det., Goodfellow AFB, San Angelo, Tex.
O'Rahilly, P. J., 2160 E. Tremont Ave., Bronx 62, N. Y.
Orand, Arlie, Gen. Del., Hampton, S. C.
O'Toole, J. J., 30 North Ave., Norwood, Mass.
Oxner, V. C., Gen. Del., Kinards, S. C.
Paige, G. D., 10th AAA Gp., APO 660, c/o PM, San Francisco, Calif.
Park, R. Y., A-4th AAA AW Bn., Ft. Meade, Md.
Parkerson, F. C., 1623 4th St., New Orleans, La.
Payne, R. H., 510 Morgan Rd., Morningside, Md.
Petersen, Chester, PO Box 562, Port Orchard, Wash.
Petersen, W. R., Box 283, Hyrum, Utah.
Peterson, L. I., 2146 41st Ave., San Francisco, Calif.
Pfauth, E. V., A-8th AAA AW Bn., Ft. Custer, Mich.
Phillips, L. R., 27 South Ave., Fairport, N. Y.
Pleitner, D. H., 4210 74th Pl., Bellemeade, Md.
Poerner, H. W., D-62d AAA AW Bn., Ft. Hood, Tex.
Porter, R. W., 507th AAA Bn., APO 929, c/o PM, San Francisco, Calif.
Preston, T. R., 1119 State St., New Orleans, La.
Previtali, A. L., 154 Magnolia St., Hartford, Conn.
Prouty, S. M., 7014 Narrows Ave., Brooklyn 9, N. Y.
Pugh, C. S., Hq., 11th AAA AW Bn., Ft. Lewis, Wash.
Quigg, C. H., 2010 N. Troy St., Arlington, Va.
Ramos, R. B., 357 Macon St., Brooklyn, N. Y.
Rau, J. E., 1455 S. Jefferson St., Allentown, Pa.
Reilly, F. G., 3919 23d St., San Francisco, Calif.
Reiner, R. A., Hq., 19th AAA Gp., Ft. Meade, Md.
Reynolds, J. W., Greenwood, Del.
Rice, J. A., 4618 Driver Lane, El Paso, Tex.
Richards, C. M., 4226 31st St., Mt. Rainier, Md.
Ritz, D. J., C-95th AAA Gun Bn., Ft. Lewis, Wash.
Roberts, L. B., RR 2, Box 28, St. Joseph, Mo.
Rose, H. C., 11386 Centralia, Detroit 28, Mich.
Ross, B. A., Jr., B-75th AAA Gun Bn., Ft. Meade, Md.
Ruggiero, R. F., 8423 Willow St., New Orleans, La.
Ruppert, J. T., 379 W. Goguac St., Battle Creek, Mich.
Russell, K. W., 1608 60th Ave., Hyattsville, Md.
Rux, Marvin E., 946 E. 223d St., Brooklyn, N. Y.
Ryan, W. J., B-70th AAA Gun Bn., Ft. Meade, Md.
Sample, M. E., Hq., 31st AAA Brigade, Ft. Lewis, Wash.
Samuels, K. M., 7536½ Burthe St., New Orleans, La.
Saylors, A. E., 512 Bond St., South Greenwood, S. C.
Scott, G. K., 27375 Northwestern Hwy., Birmingham, Mich.
Semsch, P. L., D-867th AAA AW Bn., APO 942, c/o PM, Seattle, Wash.
Sharp, D. M., Vista Hotel, Umatilla, Ore.
Sheehan, J. J., 500th AAA Op. Det., Ft. Ord, Calif.
Shelby, Roosevelt, Hq., 34th AAA AW Bn., Ft. Bliss, Tex.
Sheldon, D. M., D-867th AAA AW Bn., APO 942, c/o PM, Seattle, Wash.
Sherrard, W. H., D-678th AAA AW Bn., Williamston, S. C.
Showalter, J., 2301 Portland Ave., El Paso, Tex.
Simmons, H. M., Cherry Rd., Clemson, S. C.
Skerkowski, F. P., B-22d AAA AW Bn., APO 331, c/o PM, San Francisco, Calif.
Skipper, P. H., Rt. 1, Box 13, Avon Park, Fla.
Smith, C. L., 2014 N. Madison, Junction City, Kan.
Smith, Milford, Box 513, Clinton, S. C.
Smith, R. W., C-50th AAA AW Bn., APO 660, c/o PM, San Francisco, Calif.
Sneed, R. H., 824-C, Willow St., Oakland, Calif.
Soaries, R. J., 442 Jefferson Ave., Brooklyn, N. Y.
Solomon, H. L., Box 1354, Ft. Bliss, Tex.
Stenbuck, F. R., 84 S. Gennessee, Pontiac, Mich.
Stevens, B. L., Hq., 40th AAA Brigade, APO 503, c/o PM, San Francisco, Calif.
Stevens, W. E., B-88th Abn. AAA Bn., Ft. Campbell, Ky.
Stone, P. S., Waynesboro, Ga.
Stranahan, J. W., APO 613, c/o PM, San Francisco, Calif.
Sturdivant, L. W., B-867th AAA AW Bn., APO 942, c/o PM, Seattle, Wash.
Underland, L. S., AFF Bd. No. 4, Ft. Bliss, Tex.
Sylvester, O. G., 29 Bloodgood St., Pawtucket, R. I.
Tennant, C. O., Box 1400, Ft. Bliss, Tex.
Terry, F. R., 1958 Sheridan Rd., Evanston, Ill.
Thomas, R. C., Hq., 78th AAA Gun Bn., Ft. Lewis, Wash.
Thomson, O. C., C-867th AAA AW Bn., APO 942, c/o PM, Seattle, Wash.
Tice, C. E., 62d AAA AW Bn., Ft. Hood, Tex.
Timms, C. P., 303 Green St., Belton, S. C.
Tompkins, R. J., 2024 Dorothea, Berkeley, Mich.
Toner, J. P., Hq., 78th AAA Gun Bn., Ft. Lewis, Wash.
Toole, C. E., C-68th AAA Gun Bn., Ft. Lewis, Wash.
Trumbull, E. C., 60 Fairfield St., Pittsfield, Mass.
Turner, E. B., 67th AAA Gun Bn., Ft. Bliss, Tex.
Vaterlaus, C. F., Rt. 2, Preston, Idaho.
Watson, W. R., D-11th AAA AW Bn., Ft. Lewis, Wash.
Watterson, R., 916 St. Nicholas Ave., New York, N. Y.
Weeks, A. E., 3737 La Calle Ave., Palo Alto, Calif.
Weisbond, M. H., 72 Carthage St., Rochester, N. Y.
Welcome, V. E., 1 Chase St., Concord, N. H.
Wells, R. K., 864 Barry Ave., Chicago, Ill.
Welty, Rex G., D-79th AAA Gun Bn., Ft. Custer, Mich.
Whitmarsh, J. A., Stu. Det., AA & GM Br., TAS, Ft. Bliss, Tex.
Wildman, R. C., 588 18th St., South Arlington, Va.
Williams, C. M., D-518th AAA Gun Bn., North Richland, Wash.
Williams, S. J., Hq., 75th AAA Gun Bn., Ft. Meade, Md.
Winter, A. B., C-518th AAA Gun Bn., North Richland, Wash.
Wolfe, J. E., Young Drive, Clinton, S. C.
Woods, R. L., 520 Shuttle Meadow Rd., New Britain, Conn.
Wright, E. P., Seneca, S. C.
Wright, N. O., A-76th AAA AW Bn., APO 323, c/o PM, San Francisco, Calif.
Wright, W. R., Hq., 22d AAA AW Bn., APO 331, c/o PM, San Francisco, Calif.
Younis, E. D., 2802 Houston Ave., Macon, Ga.
Yuclan, Adrian, 1110 Bunker Hill Blvd., Jacksonville 8, Fla.
Zelius, A. O., 411 S. 2d St., Warrington, Fla.
Zobel, Ralph P., Gen. Del., Helena, S. C.

WARRANT OFFICERS

Abrams, Geo. C., 800 Caldwell St., Newberry, S. C.
Albritton, M. G., Box 705, Arcasia, Fla.
Altman, Wm. T., Box 272, Dillon, S. C.
Atkinson, J. L., 200 S. 6th St., Warrungton, Fla.
Baadem, G. E., 237 Cloverland Dr., Rochester 10, N. Y.
Bailey, Sam P., 22d AAA AW Bn., APO 331, c/o PM, San Francisco, Calif.
Benham, Leland L., Post Hq., Enl. Pers. Sect., Ft. Lee, Va.
Borzella, Belgium, 1445 Evarts St., N.W., Washington, D. C.
Bosdell, Wm. P., Rt. 2, Box 720, Greenwood, S. C.
Bottari, Vincient, NG Armory, Marianna, Fla.
Brazeau, Chas. H., 7515 N. Oakley, Chicago, Ill.
Brown, Clifford, Box 443, Crestview, Fla.
Brown, Wm. E., 35th AAA Brig, Ft. Meade, Md.
Burton, F. E., 913 Wethersfield Ave., Hartford, Conn.
Buttner, F. A., 4709 Ramona Blvd., Jacksonville, Fla.
Caldwell, Wm. H., Hq. Btry., 867th AAA AW Bn., APO 942, c/o PM, Seattle, Wash.
Campbell, Wm. L., 3606 S. Main St., Anderson, S. C.
Carlson, Leonard A., 41st AAA Gun Bn., Ft. Bliss, Tex.
Carlson, L. M., Hq. Btry., 867th AAA AW Bn., APO 942, c/o PM, Seattle, Wash.
Chandler, Frank L., 1514 Berry St., Sandston, Va.
Coleman, Jos. L., 5309 Wingate Dr., New Orleans, La.
Coley, O. F., Hq., 226th AAA Gp., Ft. Bliss, Tex.
Collins, Albert J., 2629 Haste St., Berkeley, Calif.
Connelly, Ralph W., Box 71, Newberry, S. C.
Cornell, Thos. E., 145 Culver Rd., Rochester 20, N. Y.
Corridon, L. T., 1627 Holbrook St., N.W., Washington, D. C.
Coughlin, P. J., 6608 N.W. 3d Ave., Miami, Fla.
Cox, James C., 3120 Grove St., Berkeley, Calif.
Craft, Clifford, 12 W. Legrande St., Avon Park, Fla.
Crow, C. S., Btry. A, 867th AAA AW Bn., APO 942, c/o PM, Seattle, Wash.
Curo, Garold W., 339 Fairway Dr., South San Francisco, Calif.
Curran, Bob L., 65th AAA Gun Bn., APO 331, c/o PM, San Francisco, Calif.
Daggett, L. E., Qtrs. 345, Ft. Bliss, Tex.
Dennis, Floyd H., 1229 Kinard St., Newberry, S. C.
Dunlap, M. G., Jr., Box 713, Anderson, S. C.
Early, Robert, 35th AAA Brig., Ft. Meade, Md.

Edgecombe, A. A., Jr., 1042 Summer St., New Orleans, La.
Ellis, Kirby H., Chesterfield Ave., Lancaster, Pa.
Fallgren, John R., 305 Hazlewood Dr., South San Francisco, Calif.
Ferchak, Michael P., 75th AAA Gun Bn., Ft. Meade, Md.
Fort, Harold M. T., 717th AAA Gun Bn., Box 495, Albuquerque, N. M.
Fraser, K. R., 387 Falstaff Rd., Rochester, N. Y.
Garofolo, D. J., 58 Kenneth St., Hartford, Conn.
Garrison, J. E., 117 Sycamore Dr., Florence, S. C.
Garstad, Earl, 1117th ASU, Cp. Edwards, Mass.
Goodwin, Jos. W., 5711 Argonne St., New Orleans, La.
Green, Layton H., 79th AAA Gun Bn., Ft. Custer, Mich.
Grubola, H. M., 1327 21st St., N.W., Washington, D. C.
Guilbault, W. S., 5858 Marshal Foch St., New Orleans, La.
Hahn, H. W., 128 Mechanic St., Boonton, N. J.
Hair, Raford, AFF Bd. No. 4, Ft. Bliss, Tex.
Holmes, C. A., Box 11, Richlands, N. C.
Hoopes, Joseph V., 22d AAA AW Bn., APO 331, c/o PM, San Francisco, Calif.
Jackson, C. A., Jr., 157-14 5th Rd., Jamaica 4, L. I., N. Y.
Jackson, Thos. A., Btry. B, 867th AAA AW Bn., APO 942, c/o PM, Seattle, Wash.
Kahl, Irwin N., 145 Culver Rd., Rochester 20, N. Y.
Keegan, Jas. F., 8 Landor St., Providence, R. I.
King, F. T., 5105 S. 12th St., Arlington, Va.
King, Seymour D., Btry. A, 518th AAA Gun Bn., North Richland, Wash.
Knight, J. W., 227 E. First St., Jacksonville, Fla.
Koman, I. P., 1719 24th Ave., San Francisco, Calif.
Kroes, Peter A., 1034 N. Monitor, Chicago, Ill.
Kuhn, Lloyd R., 31 Belmont St., Rochester 20, N. Y.
Lahaie, A. F., 744th AAA Gun Bn., State Armory, Laconia, N. H.
Langton, Luther L., Svc. Btry., 92d FA Bn., APO 660, c/o PM, San Francisco, Calif.
Leake, Alan M., 1537 Short St., Sandston, Va.
Lein, D. G., 1707 17th Loop Sandia Base, Albuquerque, N. M.
Lemieux, Joseph W., 22d AAA AW Bn., APO 331, c/o PM, San Francisco, Calif.
Levine, Marvin N., 4191 N. Ridgeway, Chicago, Ill.
Liljegreen, L. R., Post Signal Office, Ft. Lewis, Wash.
Lippert, Otis E., 1336 Union St., San Diego, Calif.
Lowe, Wm. A., 53 Atherton St., Devencrest, Ayer, Mass.
Lum, Nick, Hq., 97th AAA Gp., APO 331, c/o PM, San Francisco, Calif.
Martin, Jos. A., Hq., 212th Gp., 120 W. 62d St., New York 23, N. Y.
Martin, R. F., 6319½ Edmondston Rd., Riverdale, Md.
Meserve, Blair, 56 Teneyck Ave., Albany, N. Y.
Moehle, Walter J., 2164 N. Clark St., Chicago, Ill.
Monell, R. B., 10 Avondale Rd., Manchester, Conn.
Morris, C. G., 3414 Van Buren Ave., El Paso, Tex.
Motyka, W. M., 3348 Monroe St., Chicago, Ill.
Osteen, E. H., 638 Spearing St., Jacksonville, Fla.
Palmer, J. O., 214th AAA Gp., Washington, Ga.
Parks, Henry C., 30th AAA AW Bn., Ft. Custer, Mich.
Pendleton, J. L., 251 First St., Ft. Myers, Fla.
Pentello, Jas. G., E. Robt. Toombs Ave., Washington, Ga.
Perry, Solomon, Gen'l Delivery, Orofino, Idaho.
Poling, Verne L., 65th AAA Gun Bn., APO 331, c/o PM, San Francisco, Calif.
Potts, Edward J., 31st AAA Brig., Ft. Lewis, Wash.
Pusey, R. A., 15 3d Ave., Atlantic Highlands, N. J.
Ronan, Harold J., 827 Philip, Detroit, Mich.
Samuels, A. C., 4810 N. Ridgeway St., Chicago, Ill.
Sanders, Bobby L., Box 585, Clinton, S. C.
Sara, John M., 2649 Green St., Jacksonville, Fla.
Schiro, Joseph A., 3025 Bienville, New Orleans, La.
Scott, Chas. C., 22d AAA AW Bn., APO 331, c/o PM, San Francisco, Calif.
Scrabo, Paul, 212th AAA Gp., N.Y. NG, 120 W. 62d St., New York, N. Y.
Scritchfield, A. D., Btry. C, 867th AAA AW Bn., APO 942, c/o PM, Seattle, Wash.
Shular, Wm. A., Jr., 1912 Maltravers Rd., Glen Burnie, Md.
Sillery, John B., 19 Pierce St., Albany, N. Y.
Simmons, Samuel D., 695 Fifth Ave., Troy, N. Y.
Smith, Henry M., 1225 Duval St., Mobile, Ala.
Stanley, C. C., Hq. Btry., 518th AAA, Gun Bn., North Richland, Wash.
Stanley, Chas. M., 4054th ASU, Ft. Bliss, Tex.
Stone, Frank F., 4965 Brighton Ave., San Diego, Calif.
Steandall, C. A., 2826 W. Fitch St., Chicago, Ill.
Sullivan, J. M., 95th AAA Gun Bn., Ft. Bliss, Tex.
Sutton, Robt. S., 338 W. 68th St., Jacksonville, Fla.
Upthegrove, V. A., 188 35th St., N.E., Washington, D. C.
Walker, Jos. G., 15479 Turner, Detroit, Mich.
Wallace, Thos. W., Brigers House, Dillon, S. C.
White, Leonard M., 738 Aldine Ave., Chicago, Ill.
White, N. E., 68 Suffolk Rd., East Hartford, Conn.
Williams, Fred D., 535 W. 151st St., New York, N. Y.
Williams, John B., Hq., 717th AAA Gun Bn., Albuquerque, N. M.
Wilson, Jack E., 320 Chatham St., El Cajon, Calif.
Winters, Robt. E., Hq. Btry., 59th AAA AW Bn., Ft. Bliss, Tex.

ENLISTED MEN

Adcox, Geo. E., M/Sgt., Co. C, 84th Tank Bn., Ft. Knox, Ky.
Ahrens, Walter, Sgt. 1cl., 203 Piedmont Street Ext., Waterbury 81, Conn.
Allen, Virgil M., M/Sgt., 1217 Pearl St., Denver, Colo.
Baird, S. M., Sgt. 1cl., APO 206, c/o PM, New York, N. Y.
Bothea, Edw. G., Sgt., 1cl., Hq., 65th AAA Gun Bn., APO 331, c/o PM, San Francisco, Calif.
Brezezinski, N. Pfc., 11858 Indian Ave., Chicago, Ill.
Cassel, Jos. H., Sgt., 423 W. Oak St., Palmyra, Pa.
Chilson, Geo. H., M/Sgt., Box 470, Saratoga, Calif.
Coakley, C. H., Sgt., 2469 E. Main St., Columbus 9, Ohio.
Cobb, C. B., Jr., Sgt. 1cl., Hq. & Hq. Btry., 22d AAA Gp., Ft. Custer, Mich.
Cogswell, R. P., Pvt., Btry. B, 95th AAA Gun Bn., 10th Gp., Ft. Bliss, Tex.
Cohn, Ira, Sgt., 4568 Richardson Ave., Bronx 66, N. Y.
Cook, Boyd M., Sgt. 1cl., Btry. C, 736th AAA Gun Bn., Cp. Gordon, Ga.
Cunningham, J. A., M/Sgt., Broadway Armory, 5917 N. Broadway, Chicago, Ill.
Currivean, G. L., Pfc., Btry. A, 26th AAA AW Bn., APO 24, Unit 4, c/o PM, San Francisco, Calif.
Dineley, R. L., M/Sgt., 2237 Ward St., Berkeley, Calif.
Dobber, Stanley, M/Sgt., Army Comd., JLRPG, Cocoa, Fla.
Donahue, R. L., Pfc., Box 233, Folsom, Calif.
Donnelly, J. S., Sgt. 1cl., Hq. Btry., 283d AAA AW Bn., Devon, Conn.
Duffy, Thos. H., Jr., Sgt. 1cl., 16 Brewster St., Providence, R. I.
Gallagher, L. A., Hq., 18th FA Gp., Ft. Sill, Okla.
Geaney, J. J., M/Sgt., 3812 S. Anthony Blvd., Ft. Wayne, Ind.
Gonyo, W. C., M/Sgt., 4054th ASU, Ft. Bliss, Tex.
Gonzales, M. D., Pvt., 101 Wildwood Gardens, Piedmont, Calif.
Gordon, Leslie, Pfc., 213 Range St., North Mankato, Minn.
Graham, Jas. E., Cpl., 19809 Fenmore Ave., Detroit, Mich.
Hady, Henry P., Rct., Hq. Btry., 593d AAA AW Bn., Iron Mountain, Mich.
Hall, Chas. R., M/Sgt., 205 Grand Ave., Trotwood, Ohio.
Hanna, Martin L., M/Sgt., 551-A Dickman Rd., El Paso, Tex.
Hawkins, R. R., Jr., M/Sgt., Hq. & Hq. Btry., 31st AAA Brig., Ft. Lewis, Wash.
Hines, Horace L., Cpl., 450th AAA AW Bn., Ft. Bliss, Tex.
Hodges, G. C., Sgt., Hq. & Hq. Btry., 68th AAA Gun Bn., Ft. Lewis, Wash.
Howland, M. B., M/Sgt., USA & USAF Rct. Sta., Auburn, N. Y.
Hunt, John H., Pfc., 368 97th St., Apt. 6-H, Brooklyn 9, N. Y.
Hunteman, A., Cpl., Box 147, Vernonia, Ore.
Hurd, Vincent A., Pfc., 2900 Eighth Ave., New York 30, N. Y.
Hurt, P. E., M/Sgt., Box 99, Mansfield, Ark.
Kesselring, G. G., M/Sgt., Building 574, Ft. Lawton, Wash.
King, C. H., 378 Main St., Van Buren, Maine.
Knowlton, C. T., M/Sgt., 318 Highland, Kenmore 17, N. Y.
Kundrath, J. J., M/Sgt., State Armory, 1494 Main St., Bridgeport, Conn.
Lamb, A. D., M/Sgt., Cold Spring Rd., Liverpool, N. Y.
Landis, John F., M/Sgt., 507th AAA Opns. Det., APO 331, c/o PM, San Francisco, Calif.
Lee, Paul A., M/Sgt., Qtrs. 513-B, Hamilton AFB, Hamilton, Calif.
Lefebvre, J. P., Sgt., 150-26 118th Ave., Jamaica 4, N. Y.
MacDonald, A. J., Sgt., 16 Post Ave., Rochester, N. Y.
Malone, Kenneth D., Cpl., 911 Swope, Colorado Springs, Colo.
Matheson, M. M., M/Sgt., Hq., 97th AAA Gp., APO 331, c/o PM, San Francisco, Calif.
Mehl, Irving, Sgt., C Btry., 443d AAA AW Bn., Ft. Bliss, Tex.
Miles, C. L., Cpl., 827 Colfax St., Evanston, Ill.
Miller, Chas. R., M/Sgt. 609 Van Buren St., N.W., Washington, D. C.
Moliterno, Joseph A., Pvt., 25-36 36th St., Astoria, L. I., N. Y.
Morrison, Robt. C., Pvt., Btry. D, 96th AAA Gun Bn, Ft. Bliss, Tex.
Morton, R. E., M/Sgt., Hq. Btry., 717th AAA Gun Bn., Albuquerque, N. M.
Mott, F. C., Pfc., Hq. & Hq. Btry., 15th AAA AW Bn., Ft. Bliss, Tex.
Mujica, A. J., Sgt., 424 E. 13th St., New York 3, N. Y.
Nash, Leslie W., Pvt., B Btry., 59th AAA AW Bn., Ft. Bliss, Tex.
Neumuth, R. O., M/Sgt., 5129 S. Harper, Chicago, Ill.
Nystrom, Eric, Sgt. 1cl., 9215 Crescent Dr., Franklin Park, Ill.
Olton, Wm. H., M/Sgt., Hq. & Hq. Btry., 22d AAA Gp., Ft. Custer, Mich.
Pauzar, K. L., Sgt., 642 Oak St., Dayton, Ohio.
Raines, Alfred K., Sgt., Hq. & Hq. Btry., 39th AAA AW Bn., Ft. Meade, Md.
Ringrose, Dean B., Cpl., 52 Morton St., Waltham, Mass.
Ronidi, Robert, Pfc., Btry. D, 68th AAA Gun Bn., Ft. Lewis, Wash.
Rugg, E. H., M/Sgt., 227 Soundview Ave., Bridgeport, Conn.
Rugg, W. B., M/Sgt., 227 Soundview Ave., Bridgeport, Conn.
Shapiro, T. I., Hq., 764th AAA Gun Bn., Ft. Davis, Canal Zone.
Shurr, Phillip, Sgt., Hq. Btry., 41st AAA Gun Bn., Ft. Bliss, Tex.
Smith, Leslie A., M/Sgt., Hq., 40th AAA Brig., APO 503, c/o PM, San Francisco, Calif.
Smith, Martin S., M/Sgt., 38 3d Ave., Pelham, N. Y.
Smith, Lonnie J., M/Sgt., 4219 S. Berkeley Ave., Chicago, Ill.
Snively, L. D., Sgt., Qtrs. 159, Work Ave., Ft. Bliss, Tex.

Stephens, Abraham, Sgt., 518 Tennessee St., Detroit, Mich.
Suter, Edwin, Sgt., 6011th ASU, Ft. Baker, Calif.
Szcesny, Thos. J., Sgt. 1cl., 190 N. Lawndale, Chicago, Ill.
Tompkins, Daniel D., Jr., Cpl., 7th Sig. Co., APO 7, c/oPM, San Francisco, Calif.
Tuck, Geo. B., Sgt. 1cl., 3629 Myrtle Ave., Long Beach, Calif.
Unruh, Robt. H., Sgt. 1cl., Btry. A, 97th AAA Gun Bn., APO 343, Unit 4, c/o PM, San Francisco, Calif.
Vastola, V. M., Sgt., 1533 Glover St., Bronx 61, N. Y.
Viall, Wm. S., Sgt., 881 Cleveland Rd., Ravenna, Ohio.
Wagoner, A. E., M/Sgt., 1407 Litton Ave., Nashville, Tenn.
Wallingford, H., Pfc., D Btry., 68th AAA Gun Bn., Ft. Lewis, Wash.
Wedmore, A. R., M/Sgt., 205 Fifth Ave., Stratford, Conn.
Weigand, Carl E., Cpl., 24 S. Coal St., Port Carbon, Pa.
Welch, E. T., Rct., 240 Beach St., Rosindale, Mass.
Whiteside, B. E., Sgt. 1cl., 99th QM Svc. Bn., APO 407, c/o PM, New York, N. Y.
Williams, A. H., Cpl., University of New Hampshire, Durham, N. H.
Wong, A. J., M/Sgt., 4275 26th St., San Francisco, Calif.
Wronski, S. F., Sgt. 1cl., 4720 S. Harding Ave., Chicago, Ill.

CIVILIAN AND MILITARY RANK UNKNOWN

Adams, David O., Foster House, Northwestern University, Evanston, Ill.
Altare, Richard, 5638 Bloyd St., Philadelphia, Pa.
Andrews, Frank C., c/o ECON Engr. Co., Willoughby, Ohio.
Ankner, Chas. J., Jr., 29 Lawn Ave., New Rochelle, N. Y.
Anthony, S. A., Jr., 475 Fifth Ave., New York, N. Y.
Appleby, Robert H., 4809 Baltimore Ave., Philadelphia, Pa.
Arbatsky, N., 680 Park Ave., New York, N. Y.
Aronson, S. B., 902 Farmers Bank Bldg., Pittsburgh, Pa.
Basdevant, Pierre, 2535 Belmont Rd., N.W., Washington, D. C.
Berl, Eugene E., Delaware Trust Bldg., Wilmington, Del.
Birch, Melvin R., Hq., 70th AAA Gun Bn., Ft. Meade, Md.
Black, C., 620 Landfair Ave., Los Angeles, Calif.
Bundy, Charles W., Mrs., 4707 Connecticut Avenue, N. W., Washington, D. C.
Burlinson, J. J., Jr., 1070 Park Avenue, New York, N. Y.
Burt, A. S., Box 2374 Sacramento, Calif.
Callan, R. E., Mrs., 2101 Connecticut Ave., N.W. Washington, D. C.
Carroll, James F., 89-42 217th St., Queens Village, New York, N.Y.
Chapin, Leon D., 5 Federal Court, Springfield 5, Mass.
Cheves, G. X., 310 N. 6th St., Lawton, Okla.
Childers, Luther A., E. 2403 Mission, Spokane, Wash.
Cogswell, Dean E., Main St., Wenham, Mass.
Cooper, W. E., Box 979, The Citadel, Charleston, S. C.
Copeland, Robt. S., 5338 Mitscher Ave., Louisville, Ky.
Corhan, Philip, 9410 Ridge Blvd., Brooklyn, N. Y.
Cosden, Gilbert C., Box 283, Milford, Del.
Crane, T. H., 637 Tennessee St., Lawrence, Kan.
Dimmer, John P., 228 W. 71st St., New York, N. Y.
Dulay, John M., Barrio San Juan, Aringay La. Union, Philippine Islands.
Dunnington, R. E., 820 S. College, Springfield, Ill.
Dunnington, T. A., Cottage City, Brentwood, Md.
Eaton, W. P., 800 Islington St., Portsmouth, N. H.
Elten, R. H., c/o R. A. Winchester, Box 151, South San Francisco, Calif.
Evans, W. C., 479 Alameda Ave., Youngstown, Ohio.
Falkenau, Clifford A., 1 River Rd., Schenectady 5, N. Y.
Fishburne, L. G., Walterboro, S. C.
Franklin, Geo., 75th AAA Gun Bn., Ft. Meade, Md.
Fritz, Dale C., 364 6th Ave., San Francisco, Calif.
Gallagher, Francis C., 153 N. New Hampshire, Los Angeles, Calif.
Gammon, Stanley A., 109 Roberta Ave., Concord, Calif.
Genske, Joseph C., 9803 Linton St., Silver Spring, Md.
Goehring, H. J., Jr., 5529 Third St., Rosedale, Verona, Pa.
Goglio, Joseph R., 129 S. 2d St., Richmond, Calif.
Goodall, Arthur L., 700 Audubon Dr., Clayton, Mo.
Gores, Hubert M., 1740 W. 7th, Red Wing, Minn.
Hanlen, Don F., 1019 Lafayette, Denver, Colo.
Heisey, Geo. R., Mt. Aetna, Pa.
Henderson, Loyal R., 924 Sunset Ave., Asbury Park, N. J.
Hepler, J. W., Pitman, Pa.
Holbrook, Morton, 1228 Cary Ct., Owensboro, Ky.
Horvath, Frank G., 119 Hartshorn Dr., Painesville, Ohio.
Hunter, Kent A., Rm. 607 Times Herald Bldg., Washington, D. C.
Hutcherson, D. E., Jr., B Btry., 60th AAA AW Bn., Ft. Scott, Calif.
Jennings, T. M., 36 Middlefield Rd., Menlo Park, Calif.
Jensen, Harry, 1602 Quincy Ave., Racine, Wis.
Johnson, Richard C., 222 E. Delaware Pl., Chicago, Ill.
Kosmicki, Eugene E., 305 N. Case St., Bessemer, Mich.
Krengel, Herbert K., 1536 Montes Dr., Burlingame, Calif.
Lateiner, Harold, Time & Life Bldg., Rockefeller Center, New York, N. Y.
Lawn, Lester L., 384 Marlborough Ave., Detroit, Mich.
Lea, Alphonso, 39th AAA AW Bn., Ft. Meade, Md.
Leonard, Paul F., 4012 Parkway, Fairfield, Ala.
Ley, Willy, 33-15 81st St., Jackson Heights, Long Island, N. Y.
Lilian, S. H., Rt. 7, Box 275, Olympia, Wash.
Lindeman, Jack B., 214 23d St., Tracy, Calif.
Little, R. A., Box 407, Lincolnton, N. C.
McCoy, James B., La Beau Apts., Longview, Wash.
Malven, Geo. W., Apartado 893, Caracas D.F., Venezuela.
Masters, Elroy P., Berksveldt Farm, Robesonia, Pa.
Maxwell, J. F., Jr., 75-40 Austin St., Forest Hills, L. I., N. Y.
Mayhall, D. T., 2900 Woodside Pl., Cincinnati, Ohio.
Meech, Charles B., Muhlebachstasse 172, Zurich, Switzerland.
Moore, Howard H., 6433 Fairfield Ave., Berwyn, Ill.
Moorman, John, 133 Park St., Smith Center, Kan.
Murphy, J. F., Jr., 954 St. Johns Pl., Brooklyn 13, N. Y.
Navarro, John F., 10th Bn. Combat Team, Cp. Murphy, Philippine Islands.
Neil, James C., Btry. C., 450th AAA AW Bn., Ft. Ord, Calif.
Nielson, T. O., 12141 Charlevoix Ave., Detroit, Mich.
Nieman, Pat, Shawnee, Kan.
O'Brien, Robt. J., 3905 Clay St., San Francisco, Calif.
Ohldag, Henry H., 2411 Silver Ridge, Los Angeles, Calif.
Oleson, George, 119 8th St., S. Fargo, S. D.
Orlansky, Jesse, 10 E. 49th St., New York 17, N. Y.
Parke, James W., 526 E. Taylor St., Reno, Nev.
Pendry, B. H., 11491 179th St., St. Albans, New York, N. Y.
Peters, F. A., Box 200, N. Truro, Mass.
Peterson, Byron A., Pocahontas, Iowa.
Phillips, Wm. O., 1960 Park Ave., New York, N. Y.
Pivney, L. E., 2552 Belmont Rd., N.W., Washington, D. C.
Pocock, J. W., 135 S. LaSalle St., Chicago, Ill.
Poplawski, Walter J., 1546 Shelton St., Seattle, Wash.
Randall, Floyd H., 1203 23d Ave., San Francisco, Calif.
Robertson, E. Miss, Coca-Cola Bottling Co., Homer, La.
Salladay, Carr, Box 158, Terra Bella, Calif.
Schleuter, E., 512 3d St., Corte Madera, Marin County, Calif.
Sessums, Roy T., Louisiana Polytechnic Institute, Ruston, La.
Shaw, John E., 7 Orange St., Newburyport, Mass.
Sindler, Alban, 2500 Longwood St., Baltimore, Md.
Small, Frank, Box 874, Palmer, Alaska.
Somkopulos, Geo., 234 W. 22d St., New York, N. Y.
Sparace, Sal, 127 First St., Rome, N. Y.
Spencer, Kendall H., 7 Inverness Rd., Winchester, Mass.
Starkey, John K., 108-23 63d Dr., Forest Hills, L. I., N. Y.
Stebbins, R. E., 5529 Bosworth Pl., Cincinnati, Ohio.
Stokes, Russell, 106 Bank Ave., Mount Holly, N. J.
Taylor, H. H., Jr., 715 Ingraham Bldg., Miami 32, Fla.
Thomas, Wm. S., 1015 Beechfield Ave., Baltimore, Md.
Thompson, Willis D., 24 Ridge Rd., Concord, N. H.
Thurston, Geo. R., 213 N. 6th St., Richmond, Ind.
Trohan, Walter, 815 Albee Bldg., Washington, D. C.
Turnage, D. G., 402 Morgan Ave., Chattahoochee, Fla.
West, Robt. B., 931 N. Osage, Apt. A, Tulsa, Okla.
Wheaton, E. P., 517 Bonhill Rd., Los Angeles, Calif.
Willis, Harry W., 20 Western Ave., Butler, N. J.
Wrean, F. M., 609 S. Neil St., Champaign, Ill.
Wright, Peter, Box 1295, Ga. Inst. Tech., Atlanta, Ga.
Yackey, H. H., Jr., 2425 Prospect St., Berkeley, Calif.
Yui, J. C., Box 37, Chungking, China.
Yust, Chas. H., Box 1852, Cleveland, Ohio.

WE'RE GETTIN' TOUGHER*

MAJOR FORREST KLEINMAN

KOREA

THEY came at dusk, out of the saffron hills and green rice paddies in front of our battalion's horseshoe position a few miles south of Chinju. They were shooting as they came, charging straight up, screaming between bursts from their automatic carbines. Perhaps they thought that we would be afraid and run away. After all, we had run away before . . . "strategic withdrawal," I think the newspapers call it.

For more than a week we had been executing strategic withdrawals only a jump ahead of them as they'd steam-rollered their way toward the vital Chinju-Masan highway. But we were tired of running, of being afraid, and this time we'd been told to hold.

IT was a lovely position to hold. It had a U of beautiful big hills nicely humped at the closed end to command the fingers and flanks. They were the kind of hills that murder your legs and lungs but save your life. So we climbed those beautiful brutal hills in the scorching sun and dug deep into their rocky slopes and crests. At the open end of the U we placed our pair of tanks to cover the road, and then we waited in the too peaceful hum of that hot summer afternoon for our enemy to come to get us.

Our patrols spotted them while they were still three miles away . . . a long brown column snaking along one of those back roads that aren't supposed to be there according to the Korean maps but always are when the enemy comes after you.

Soon their advance patrols were scurrying around the outskirts of our position, trying to draw fire that would disclose our location and strength. I think they were a little puzzled not to find us along the road or on the forward slopes where they had found us before.

WE'D learned that our front is the four points of the compass and to prepare for attack from any and all of them. We'd learned to fit our tactical doctrine to the ground as it exists in Korea, not to the ground of the textbook examples, and to climb and climb and climb even when we couldn't take another step. We'd learned to hold our fire, to shoot to kill men and not the shadows that come to taunt the imagination at night when a GI and his buddy are alone in their foxhole.

We held our fire now. Even the replacements fresh from the States who'd joined us during the afternoon remembered what they'd been told as they were hurried into the lines. Not a man stirred on the saffron horseshoe of hills. The enemy patrols grew bolder, came closer. Skirmish lines began to form behind them and move forward.

At the battalion command post in the yard of a Korean farmhouse within the horseshoe, the staff listened to the reports that flowed in from the OPs by field phone and radio and they forgot to wipe off the perspiration that dripped from their faces onto their maps.

"Red 3 this is Baker 6 . . . approximately 300 North Koreans are moving onto the ridge opposite my position. Their patrols are starting toward us now . . . Red 3 this is Able 6. Enemy moving in on us from West and Southwest. Looks like at least two companies with machine guns and mortars . . . Red 3 this is Zebra 6. They're closing in fast now. Think they are getting ready to assault. My range is only 400 yards! . . ."

The S-2 and S-3 grinned at each other. Here was the break the 1st Battalion, 19th Infantry had been waiting for. The enemy was walking right in with his chin out. He'd become so cocky that he was going to assault without further reconnaissance and without artillery or mortar preparation.

The man upon whom this break depended crouched in his foxhole on the horseshoe, chewing gum from his C ration supper packet. As he peered through the fading light at the gathering figures on the ridge opposite him, he felt for the reassuring touch of his rifle and grenades, and he swore softly.

A GREEN flare went up on the ridge opposite Company C on one finger of our U, followed quickly by another flare from ground facing the base of the arc. A few seconds later all hell broke loose.

Whistles blew and they came down the slopes into the narrow valleys that separated us from them. They disappeared into the curtain of our mortar fire only to reappear suddenly on our forward slopes. The holes torn in their ranks seemed to be filled as if by a quick flowing brown liquid from reservoirs behind them.

The boys from Texas and Kansas and Brooklyn were firing into them as fast as fingers could touch triggers, load magazines, feed machine-gun belts, drop shells into mortar tubes. Tracers laced the purple dusk around them. Bits of their ridge exploded into flashes of light, and jagged metal whined . . .

At the Company C OP the artillery forward observer was calling prepared concentrations onto the rear and flanks of the charging line. A burst of auto-

*Reprinted with permission from the October 1950 issue, *Combat Forces Journal*.

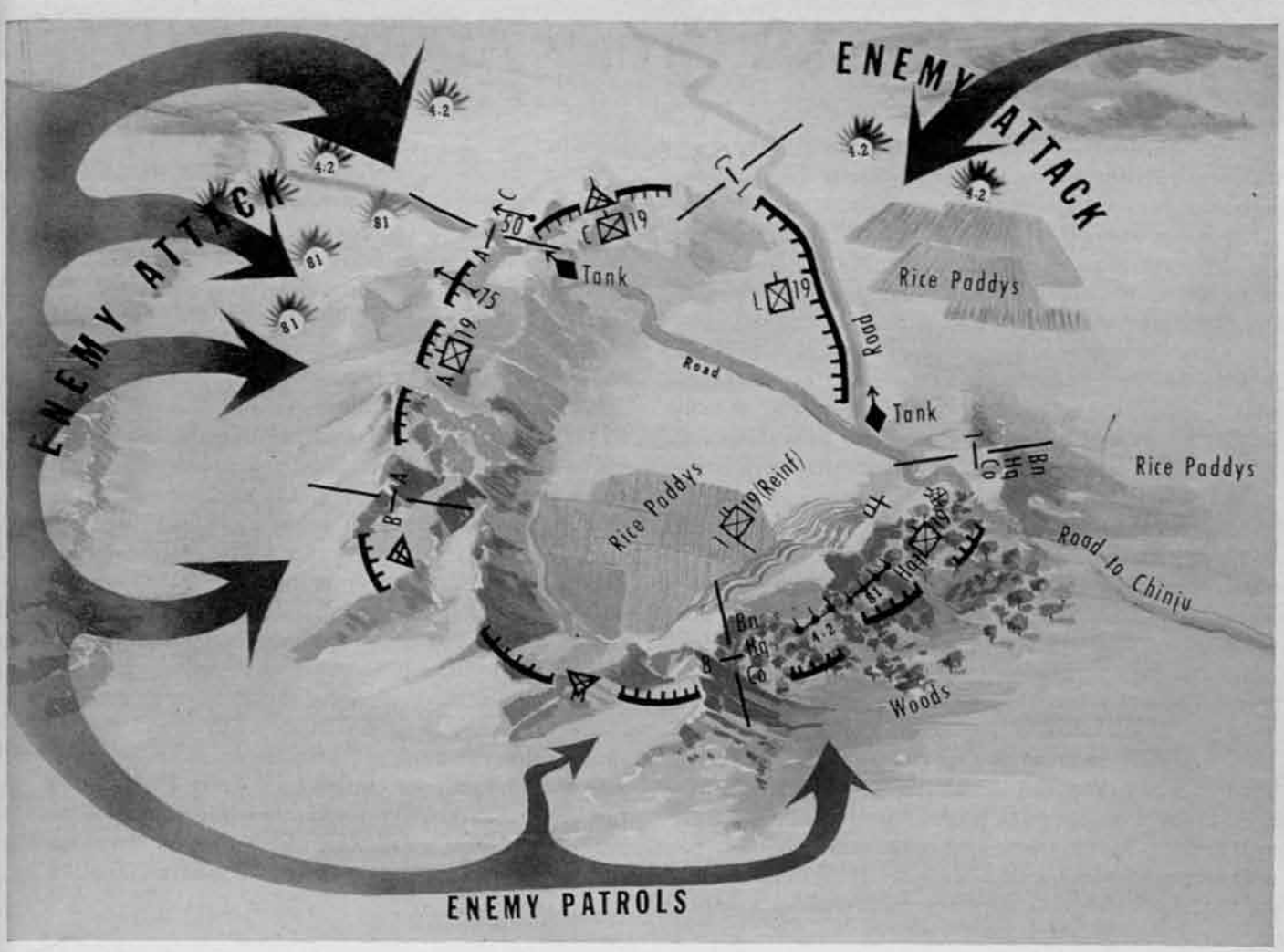

matic fire hit him in the shoulder, but his voice didn't falter as he spoke into the radio mouthpiece. A few minutes later the enemy silenced him, but not before he had completed his fire orders.

The enemy ranks were ragged now, yet the remnants came screaming over the crest led by a saber-brandishing officer. A burst of automatic carbine fire dropped him. A nearby GI jumped out of his foxhole and beat two others to the saber, then shot his way back to safety.

Grenades popped out of the foxholes like baseballs and took their toll. Here and there along the reverse slope, screams died into gurgles as American bayonets found bellies and throats.

At the close quarters in gun positions and foxholes, the enemy died under smashing rifle butts and the quick desperate thrusts of trench knives.

ABRUPTLY all firing, all of the sound and fury died away . . .

The silence seeped into our numbed and drunken senses like healing balm. The knots in the pits of our stomachs loosened little by little and gradually we became aware of the croak of frogs and insect rustles of the summer night.

We found that we could speak again without choking on pounding blood in our throats, and voices began to drift out of the foxholes:

"We did it! We stopped the bastards!"

"Yeah, they ain't so tough."

"Maybe we're just gettin' tougher."

"Well, let's get some more ammo up here. What's left of 'em will be back at dawn."

"Yeah, but they ain't going no place! . . ."

227th AAA Group At Stewart

Only two sleeve targets out of 13 got away—and they were well cut up—when 90mm antiaircraft guns of the 227th Antiaircraft Artillery Group, Florida National Guard, fired on the ranges of Camp Stewart during summer training.

The 40mm and .50 caliber guns blasted down four out of nine of the new, fast RCAT drones that were used as targets during the encampment, July 2 through July 15.

Eight sleeves were towed by Oklahoma National Guard planes from near-by Hunter Field, Savannah, Ga., during the first day and 227th gunners got seven. The eighth, though ripped up, got away. On the second day of firing, the gunners knocked down four sleeves in two hours and 15 minutes but let the fifth, shot to pieces, get away.

"Some of the best shooting I've ever seen," was the comment of Col. P. L. Wall of Jacksonville, group commander.

The lighter guns had some trouble with the radio-controlled drones, a new type capable of speeds in excess of 250 miles per hour. Regular Army crewmen launched the drones from a new type of ramp, a concrete circular track on which a dolly supported the plane until it reached flying speed. The dolly was controlled by a cable from a steel center post in the circle.

An AAOC (Antiaircraft Operations Center) modeled after the center described in the January-February issue of the ANTIAIRCRAFT JOURNAL passed a field test during a two-week summer encampment here of the 227th AAA Group.

According to Maj. Conrad Mangels, Jr., AAAOC Officer for the group, "There is no publication available on methods and practices for field units; the article was our major guide for setting up our AAOC."

Firing on the big Stewart ranges were the 712th AAA Gun Battalion (90mm) of South Florida; the 265th AAA Gun Battalion (90mm) from West Florida; the 148th AAA AW Battalion (40mm and .50 caliber) from North Florida, attached to the 227th for training though a part of the 48th Infantry Division, and the 115th AAA Gun Battalion (90mm) of Mississippi, also attached.

The 90mm guns of the two Florida battalions expended 3,400 rounds of ammunition and the Mississippi battalion added 600 more rounds firing at targets. In addition 766 rounds were used on trial shot, calibration and ground fire problems.

The 40mm and .50 caliber guns of the 148th expended 5,431 rounds of 40mm ammunition and 94,300 rounds of .50 caliber machine-gun ammunition.

Guardsmen travelled from Florida to Stewart by special train, truck convoy and plane. Mississippi sent their officers and men by train.

Making a precedent-setting flight, were four batteries of the 712th AAA Battalion from South Florida. Men and field equipment enplaned at three fields in South Florida and three hours later landed on Liberty Field, located on the Camp Stewart, Ga. reservation where summer maneuvers were held. Instead of nearly two days by truck convoy, the battalion made the camp trek of nearly 500 miles in a matter of hours.

228th AAA Group, SCNG, at Stewart

Completes Field Training With Flying Colors

By Colonel D. W. Bethea, Jr., SCNG

The 228th AAA Group, South Carolina National Guard, moved to Camp Stewart, Georgia, on June 25, for the third consecutive year of summer training at that station. The Group consisted of Headquarters and Headquarters Battery, commanded by Colonel D. W. Bethea, Jr. of Dillon; the 107th AAA AW Battalion (SP), temporarily commanded by Major E. R. McIver, Jr. of Conway; the 678th AAA AW Battalion, commanded by Lieutenant Colonel M. T. Sullivan of Anderson; the 713th AAA Gun Battalion, commanded by Lieutenant Colonel B. N. Singleton of Florence; and the 246th Army Band, commanded by CWO Ben Hughes of Greenwood. The following Reserve units from Charleston trained with the Group: 316th AAA Group under the command of Colonel D. M. White, Jr., 376th AAA AW Battalion commanded by Lieutenant Colonel T. J. Thorne and the 331st Operations Detachment commanded by Major H. McLendon.

Troops moved from home stations by motor convoy. Approximately 150 officers and 1,350 enlisted men attended the encampment.

Excellent AAA target practices were conducted by all battalions.

Three B26s and two P51s based at Hunter Field, Savannah, were used for towing and tracking. The OQ 19 RCAT was used as targets for AW firings. Air National Guard units from Little Rock, Arkansas, and Tulsa, Oklahoma, furnished excellent aerial missions.

The 713th AAA Gun Battalion shot down a number of sleeves and obtained several hits with the VT fuzed ammunition.

The 107th and 678th AW Battalions shot down ten OQs. The average life of the RCAT was only three runs across the AW firing line. In addition, the AW battalions fired on towed sleeves and registered numerous hits.

All units participated in antimechanized firing with assigned weapons on an excellent moving target course. The rocket launcher, pistol, carbine and submachine gun were also fired.

The Group executed a two-day field exercise in two phases. The first phase required the setting up of an AAA defense of a hypothetical guided missile launching area. The second phase was a night movement to provide an AAA defense of the local airdrome, Liberty Field. The problem was prepared by the Group instructor. All officers and enlisted men agreed that despite the mud and rain, the field problem was highly profitable.

The Aggressor force, under command of Major James Gallaway, Group S-2, injected the local ground security aspect of combat conditions in realistic fashion. The force consisted of three officers and twenty-five enlisted men. They claimed the capture of a lieutenant colonel (battalion commander), a captain, and a number of NCOs and other enlisted men. The Blue force captured nine members of the Aggressor team.

The success of the camp was facilitated by the able assistance and cooperation of the following Regular Army officials:

Colonel W. A. Weddell, Senior AAA instructor, assisted by Lieutenant Colonels J. S. Albergotti and D. S. Keisler and Major G. R. Evans, Regular Army instructors.

Colonel K. M. Barager, Commanding Camp Stewart, and his staff.

The 43d RCAT Detachment, commanded by Lieutenant Fred Dawson, Fort Benning, Ga.

Instruction teams furnished by the AA & GM Branch of The Artillery School, Fort Bliss, Texas, and by Fort Custer, Michigan.

Distinguished visitors included Major General W. C. Chase, Chief of Staff, Third Army, Major General James C. Dozier, The State Adjutant General, and Brigadier General A. B. Godfrey, Commanding General 51st Infantry Division Artillery. The 107th AAA AW Battalion is an organic unit of the 51st Division but has trained with this Group each encampment.

In attendance and in training value this was the most successful encampment of the 228th AAA Group since the reorganization of the South Carolina National Guard in 1947.

Your Journal

As most of our readers know, two years ago the Infantry Association submitted a proposal for the Armored Cavalry, the Coast Artillery, the Field Artillery and the Infantry Associations to merge into the Association of the U. S. Army and to publish one journal for the combat forces.

This proposed merger involved for all both advantages and disadvantages. Your Executive Council believed, however, that if the merger could be worked out harmoniously, it would serve to further unification within the Army and that the over-all advantages to be gained thereby would outweigh other factors. The Council also realized that the Antiaircraft members desired to support teamwork in this matter. Accordingly, the Council has favored the merger and has participated in conferences and discussions in an earnest effort to work out a sound and equitable basis for such a merger.

The Council believes that the Antiaircraft membership would desire appropriate recognition and participation in the policies and management of the proposed journal. Thus far, however, it has been unable to secure terms which would meet that requirement. The Council stands ready to cooperate further toward a harmonious merger. Should events later offer a proper participation under the proposed merger, the Council will promptly submit the proposal to the membership.

Meanwhile, the main effort at present is being directed toward the continuation of the ANTIAIRCRAFT JOURNAL under existing policies. Appropriate action will be initiated to change the name of the Coast Artillery Association to the Antiaircraft Association.

In January the Armored Cavalry Association voted not to participate in the proposed merger and to continue the publication of their Journal. The Association has now become the United States Armor Association. It publishes the excellent journal, *Armor,* as the medium for armored warfare.

In August the Infantry and Field Artillery Associations merged to form the Association of the U. S. Army and to publish the *United States Army Combat Forces Journal.* This excellent monthly is maintaining the high standards of both of its predecessors.

The *Infantry School Quarterly* at Fort Benning, Georgia, continues to cover in capable fashion the latest thought on technical and tactical matters of interest to the Infantry.

All of these combat magazines give your Antiaircraft Journal valuable cooperation. We wish them continued success.

The Council wishes to thank the many members who have given help and suggestions on the proposed merger. Any further comment will be welcomed.

Photo by Charles C. Minker, Wilmington, Del.

A 40mm crew of the Delaware National Guard's 945th Automatic Weapons Battalion knock down their gun for a two-week session at Dewey Beach, Del. Mostly recruits, this outfit turned in an impressive score.

Delaware Guard at Fort Miles and Bethany Beach

By Lieutenant Jack D. Hunter, Arty., Del. NG

The captain squinted into the humid sky and said: "Those boys are shooting like they're mad at those targets."

As he watched, 40mm tracers needled through the slight haze and clipped shreds from the red nylon tow sleeve with almost scissor-like precision.

"Yes, sir, those boys are hot—I mean hot."

The captain, an ex-combat paratroop officer and now a battery commander in the Delaware National Guard, had dropped in for a chat at the Group CP. He chuckled, then lit a smoke.

"The darndest thing about it all is that they're only high school kids, most of 'em."

The captain just about summed up the performance of Delaware's 261st AAA Brigade at its 1950 training encampment at Fort Miles and Bethany Beach, Del.

His outfit, part of the 945th Automatic Weapons Battalion, was putting up a show that was typical of all other units in the brigade.

To the south, on a strip of sand at Bethany the 90mm guns were also busy making targets unusable. There, the 736th and 193d Gun Battalions, also manned mainly by fuzz-faced boys, were told to "bracket and lay off those sleeves" to save time consumed in target replacement.

Although the shooting was, in the words of Brig. Gen. John B. Moore, the brigade's commanding general, "the best I've ever seen at any Guard encampment," Delaware had its problems.

First, the deployment of troops and equipment over an area that stretched from Fort Miles, at the mouth of the Delaware River, to Dewey Beach, about 10 miles south, to Bethany, about 15 miles farther down the coast.

Second in line of training troubles was the fact that impact areas put an overlay on one of the biggest commercial and pleasure fishing spots on the East Coast. This, in addition to the recurrent complaints of boat operators, complicated things by calling for special safety procedures.

The third crimp in Delaware's style came from the repairs of the Indian River Inlet Bridge that spans a deep stream leading to the ocean. The bridge was not available to vehicular traffic, and supply and liaison vehicles were forced to take a 40-mile detour on runs from Fort Miles to Bethany Beach.

But none of these offered an insurmountable barrier.

Brigade staff officers put their heads together and directed the laying of direct phone lines between headquarters at Miles and group and battalion CPs down the coast. A

shuttle-bus was also instituted so that liaison personnel could cut in half the time required to detour the inlet.

To get around the fishing fleet problem, firing of all weapons was held only in the afternoon and early evening —the period when boats were out to sea and clear of the impact areas.

For other vessels that happened along during the shooting, a Regular Army liaison plane and safety boats hurried to warn them off. Interruptions due to these wanderers were few as a result.

Fishing craft operating out of the inlet and from other points adjacent to the firing lines were informed daily as to the schedule of shooting. When weather cancelled operations for two days, that information was posted as quickly as possible.

All units except the brigade headquarters and the state staff moved directly into bivouac on the first three days of the encampment. In that period, guns were emplaced, communications established, and ammo dumps prepared.

From bivouac, troops with the gun battalions moved into permanent shelter at Bethany Beach and the automatic weapons outfits took over barracks at Fort Miles. Each morning troops at both sites entrucked for the firing points. Morning sessions were devoted to schools on everything from first aid to field fortifications, then after noontime chow, crews went to their guns for four to five hours of practice.

At both points, sections of the 262d Ordnance Medium Maintenance Company set up machine shops to handle part replacements or repair. The 361st Signal Radar Unit operated between the two ranges.

Probably the biggest training impetus was given all outfits when on the second day of the encampment the 736th Gun Battalion and the 361st Signal Radar Unit were given notice they would be called into full-time Army duty at an early date.

The Korean show, in the opinion of old-timers in the brigade, was brought much closer to home when other outfits saw their buddies in the 736th and 361st start a lot of letter-writing as the first step in settling affairs at home.

As soon as the 736th returned to its home armory in Wilmington, applications for enlistment ran high, the concensus among recruits being "we're going to be drafted anyhow —so why not go with a home-town outfit?"

The 361st had no recruiting problems and was, according to Second Army training teams helping out on the range, "ready for combat at any time."

Both outfits are now in their first training period with the Army at Camp Gordon, Ga., where many of their officers trained in World War II.

Lt. Col. Frank T. Lynch, commanding officer of the 736th, had this to say about the highly effective fire put up by his gun crews:

"They're young, yes, and most of them never heard a shot fired by somebody with a hard nose. But they're all smart and tough—we won't take drugstore cowboys and eight-balls —and they get the knack fast. Let me work them out for awhile and you'll see one of the hottest antiaircraft artillery outfits in the world."

On Lynch's last day of firing this summer, his outfits backed up his boast by knocking a half-dozen targets into the ocean.

"You see?" the colonel grinned. "You just can't *make* 'em bracket."

Exercise Metro

The 35th AAA Brigade, Fort Meade, Maryland, Colonel Pierre B. Denson, commanding, conducted EXERCISE METRO in Washington, D. C., and vicinity during the period September 11 to 23. The following units participated:

- 19th AAA Group, Colonel Harold P. Gard, commanding
- 503d AAA Operations Detachment, Major Alfred J. Montrone, commanding
- 4th AAA AW Battalion, Lt. Colonel Chester T. Barton, commanding
- 39th AAA AW Battalion, Lt. Colonel Nyles W. Baltzer, commanding
- 70th AAA Gun Battalion, Lt. Colonel Francis G. Gregory, Jr., commanding
- 75th AAA Gun Battalion, Lt. Colonel Peter L. Urban, commanding

The 85th Bombing Squadron, Light, from Langley AFB, Virginia, participated in the exercise, simulating air attacks night and day on objectives in the defended area. In conjunction with the Eastern Air Defense Command and the 647th Aircraft Warning Squadron, the Brigade tested the early warning service, communications, and unit efficiency in the antiaircraft defense.

The primary purpose of the exercise was to gain experience in the problems involved in the establishment of a defense in a metropolitan area. Similar exercises are planned for other metropolitan areas.

As the Brigade moved to positions the weather cooperated to furnish interest in the form of steady rains which continued throughout the first week. Old soldiers and recruits alike weathered it and were rewarded in the last week with better luck.

Colonel Denson and his troops received many distinguished visitors.

ROTC SUMMER CAMP
FORT MEADE, MD.

By Colonel M. A. Hatch, Arty.

The AAA ROTC Summer Camp for the First, Second, Third and Fourth Armies was conducted at Fort Meade during the period 17 June to 29 July. It was conducted jointly with Infantry ROTC units. The author served as the Senior AAA Instructor. A résumé of the highlights in successful achievements, as well as a few of the difficulties and disappointments, may be of interest.

At a planning conference at Second Army Headquarters in March we were advised that we were to be restricted in our service practice to three specific afternoons in the third week of camp: July 5th, 6th and 7th. No alternative dates were permitted. These restrictions were the result of objections by local commercial fishing and resort operators and conflicts with National Guard firing dates.

The primary benefit of an antiaircraft camp is the AAA firing. To hold it in the middle of camp is undesirable; to limit the prescribed 65 hours to a maximum of 18 is deplorable, especially when uncertain weather, safety of the field of fire and other factors are sure to reduce the time even further. The superior conditions at Ft. Bliss are well known. The very fine range at Haven, Wisconsin, on the shore of Lake Michigan was used last year and found to be so good and free from interference that the lease was renewed for five years. All this and more was reported through Fifth and Second Armies to the Field Forces. The result was an indication that some other site might be considered next year.

As it turned out, we were rained out only one day of the three. In addition, 4 hours were lost because of unsafe field of fire. Tow target trouble and waiting for new sleeves to replace those shot down accounted for 2½ hours.

After returning to my home station from the Second Army conference I revised the Master Schedule, prepared tentative weekly schedules and contacted PMS&T's concerned to ascertain the best specialties of their instructors who were due to attend camp. From this information instruction teams were planned and members notified of their committee assignments. Also, PMS&T's were given available information for use in briefing their students prior to camp.

The instruction staff reported for duty at Ft. Meade five days before the opening date of the camp. Some revision was necessary in the detailed schedules because of changes in dates of planned demonstrations by supporting troops and in disapproval by higher authority of some of the planned instruction. This latter included elimination of interior guard duty. It had been planned to help the hard pressed antiaircraft troops by guarding their equipment, spotted for drill purposes in the ROTC area, and at the same time providing future officers with valuable experience. It is believed that commissioned officers should have some background experience as privates and noncommissioned officers of the guard. However, this was not included in the Department of the Army program for summer camp.

In view of the limited time allotted for regular service practice it was hoped to be able to take the students to A. P. Hill for demonstration and practice in ground firing with antiaircraft weapons. However, since this again is not provided in the training directive and would have involved additional expense, it was also disapproved by Second Army.

The camp was organized along regimental lines. There were two battalions of infantry and one of antiaircraft. Senior instructors were battalion commanders and were concerned primarily with training. The camp headquarters functioned as a regimental headquarters and relieved the battalion commanders from the bulk of administrative details. There were 450 students in the AAA battalion, divided into three batteries.

The 90mm guns were set up at Bethany Beach. Two batteries of matériel were available, less one gun manned by OR personnel. The automatic weapons firing point was about ten miles away near Rehobeth Beach. One battery of matériel was manned by ROTC and one battery by OR personnel. Both 40mm and M55 Cal. .50 MG's were fired. Rotation of personnel was effected after each course. Maximum instructional benefit was the object rather than target practice excellence.

Because the service firing was held in the middle of the camp period it was desirable to emphasize some other phase of training as a second climax. Therefore, much of the time that would otherwise have been devoted to service firing was utilized in preparation for and execution of the prescribed field exercises. Major D. W. Malone did a fine job in planning the problem involving the defense of certain corps units in a defensive situation. Students were given their assignments on Friday afternoon of the fifth week, after they had completed necessary ground reconnaissance for positions. The exercise took place Monday and Tuesday of the sixth week. Matériel was dug into field positions. L-16s "strafed" positions at dusk on Monday and at dawn on Tuesday. During the hours of darkness on Monday, all units were tested by a force of aggressors furnished by the 3d Cavalry supporting troops. Instructors were assigned as

Colonel Melton A. Hatch graduated from the U. S. Military Academy in 1918 and entered the CAC. During World War II he served as the Antiaircraft Officer and Deputy Chief of Staff of the Eighth Army in the Far East. He now serves as the PMS&T at the University of Illinois.

umpires. There was very little sleep Monday night. Students found that doing the job in the field was much tougher than they imagined from reading about it. Nearly all the expected mistakes were made by some cadets at some time. These, of course, were reviewed at the critique. The students appreciated the great value of the lessons learned.

There were a number of demonstrations on subjects not prescribed in Army Training Program No. 145-3. These included 120mm, AAOR, a trip to Aberdeen Proving Ground and small day and night infantry demonstrations followed by practical problems.

One afternoon of the fifth week was devoted to a mass athletic meet. Every antiaircraft student participated in two events. The primary benefits were in the preparatory tryouts and training and in acquainting future athletic officers with the mechanics of running this type of athletic meet. Altogether 84 events were run off, many simultaneously, and at a stepped up tempo entirely foreign to the conventional type of meet. Many of the events were taken from TM 21-221. Others were the brain children of our able athletic officer, Captain Kaltenbach. Excitement was great as evidenced by the comments and attention given to the master scoreboard. Competition was keen and the outcome undecided till near the end. The famous pie-eating contest climaxed the day.

Special effort was made throughout the camp to utilize students to the maximum in positions of authority and responsibility. Changes were made weekly. More frequent changes would have been undesirable in that the time would have been too short for real accomplishment. Wherever practicable students were used as instructors. Over 100 were used in the first two weeks alone. For weapons and communications, for example, each battery was divided into ten sections. The committees concerned had to work overtime in training the instructors after hours in preparation for their duties. By these means each student was given a number of assignments involving some practical application of leadership.

Special attention was given to make every hour count, rain or shine. One whole afternoon, and many other intervals on the firing ranges, were lost to shooting because of inclement weather and other causes. Such time was utilized in instruction in nomenclature, orientation, tracked vehicle instruction, additional instruction on the radar and M-9 director and in T.I.P. presentations prepared and staged by students.

A 16mm motion picture record was made of the camp. After spoilage and necessary cutting about 800 feet of good film resulted. This should be of considerable value and interest on the campus, especially for those anticipating next summer's camp.

The outstanding instruction of the training committees and the exceptional support given by the personnel of the 19th AAA Group, 3d Armor Group, and the 11th Airborne Division made possible an interesting and successful camp.

Cadets from the following AAA ROTC units participated in the camp:

University of Alabama
University of Cincinnati
The Citadel
University of Delaware
Florida A & M
Fordham University
Georgia Institute of Technology
Hampton Institute
University of Illinois
University of Maine
Michigan State College
University of Minnesota
Mississippi State College
University of New Hampshire
Utah State Agricultural College
Virginia Polytechnic Institute
Washington University

More than four hundred students successfully completed summer encampment.

Artillery School Changes

The Artillery Officers Advanced Course, now in progress at Fort Sill, will be divided into two sections about 6 October. Thereafter the Antiaircraft officers will go to Fort Bliss for a six months' course in Antiaircraft. Field Artillery officers will remain at Fort Sill for a like course in Field Artillery subjects.

This course was originally programmed for 42 weeks, with roughly one-third of the time allotted each to common subjects, Antiaircraft, and Field Artillery. This program intended to have all officers take the instruction in all three fields. The change will take place upon completion of the common subject instruction.

The change was approved by the Chief, Army Field Forces to provide intensive instruction in their respective fields for both the Antiaircraft and the Field Artillery officers. It is understood that the change was dictated by immediate requirements for expansion, and that it does not reflect any change in the long-range plans to achieve a genuine integration into one Artillery.

Specialist courses for motor officers, motor sergeants, motor mechanics, FA and AAA gun mechanics, communication and meteorological specialists will be conducted at Fort Sill. Radar, electronics, and guided missile specialists will receive their training at Fort Bliss.

VOL L ++++III Sept-Oct '50

Typical Faults and Failures AAA Automatic Weapons

By Captain Henry A. Oehrig, Arty.

In this article we shall cover the typical personnel faults and matériel defects noted in the antiaircraft automatic weapon firing and maintenance at one of our busy summer camps. Corrective measures are also indicated. In most of the units involved the men were comparatively inexperienced, though quite intelligent and enthusiastic. The observations made are quite applicable in the training program in which we are now entering. Other articles in the JOURNAL cover the commendable progress which was made by determined efforts.

Naturally, the salt spray and sand at the seashore firing point had a terrific effect on the matériel. The units had such heavy training schedules that they initially allowed only one hour a day for maintenance of equipment. This was inadequate and the guns soon began to show the effects. The maintenance period had to be increased to two full hours per day. During the night and early morning hours salt spray came in over the shore and permeated into every nook and corner of the matériel, so that rust formed overnight. This plus the blown sand caused a very serious problem. Every morning it was necessary to completely strip down the equipment and clean it thoroughly. All parts were freely coated with light oil before reassembling, especially the bolt and top plate cover of the caliber .50 machine gun. The lower chassis and top carriage also required careful cleaning. The sand, salt spray, and film that had formed during the night on all the matériel had to be removed carefully.

Matériel deficiencies noted on the 40mm gun were: check lever pins sheared off; catch head release pins sheared; broken closing springs; and spline shaft pins severed. Ordnance personnel had to replace two defective oil gears on the firing line. The fire control electrician made minor adjustments on others. Three directors had to go to Ordnance for repair due to short circuits. Elevation switches jumped out quite often during firing; this was corrected by wiring down the switch each time a course was fired. Perhaps an adjustment could be made on the equipment to prevent this nuisance.

On the caliber .50 machine guns there were several driving rod springs and driving rods, weak or broken, that had to be replaced; this was done immediately on the line.

It was quite apparent that most of the trouble encountered was due to the using personnel. Chiefs of section did not sound off the commands effectively. More emphasis should be placed on discipline within the section during daily drill. Chiefs of sections should be trained and required to run the sections. The safety officers (line of metal) should let the chiefs of section run the gun crews and not interfere, except in safety procedure. More initiative, responsibility, and respect should be given the section leaders.

Usually the battery officers acted as line of metals officers. They should hold critiques immediately after the course is over and correct all mistakes, including those made by the chiefs of section.

Gunners should be alert at giving "cease fire" should the gun go beyond the limit stakes. Gunners consistently failed to engage the azimuth clutch within the limit of safety, thus failing to get those important first rounds up there on the approaching leg for the first possible "fly-through"; usually they opened up about midpoint. The majority of gunners neglected to check recoil after each course. Some did not know the proper method of checking level of oil in recoil cylinder. It is the gunner who emplaces the gun and levels it, not the chief of section; and it is his duty to know how to perform this important function. It is, however, the responsibility of the chief of section to check the level and an officer should double check this. Gunners quite often neglected to check the elevation clutch after it was engaged. The results were obvious.

Many courses were wasted because the loader and firer failed to feed the first round on the loading tray, due to incorrect handling of ammunition. Too often he neglected to disengage the hand operating lever and put it in the vertical position. Frequently he failed to place the fire lever on "safe" after firing the course, thus breaking one of the most important safety regulations. In several instances the loader and firer did not have the feed control thumb lever to the left; and, the old standby, he allowed cartridge clips to get under the firing pedal, causing the piece to misfire. Some new loaders and firers continue to watch the tracers and the target instead of feeding the gun; consequently, the rate of fire was very irregular. In a number of cases the weapon jammed due to incorrect loading. The old phrase "keep it nose heavy" still holds! Much time and stress must be placed on these points before allowing a number seven man to fire the 40mm gun.

Ammo handlers were observed watching tracers instead of handing ammunition to the loader and firer! Also they were handing it incorrectly, that is, backwards, which naturally caused delay, confusion, and a poor rate of fire. Clipping of 40mm ammo was poor and the handling was too rough and careless.

As for the director crews (units had both M-5 A1 and M-5 A2 Directors) there were many significant errors made that could have been corrected before firing. The range spotters and range setters, depending on the director used, were not observing tracers at target to make spot corrections. Sometimes they were not waiting until trackers sounded off "on target" before repeating command. They

Captain Henry A. Oehrig was commissioned in the CAC from the ranks in 1941. He served as an AW unit commander in active campaigns in Alaska and in Europe. Now assigned as S-3, 4th AAA AW Battalion, he served as the senior Instructor of the 35th Brigade AW Instruction Team at Fort Miles, Delaware, during the past summer.

also made spot corrections too erratic during the excitement of firing. It was found that a special class of instruction had to be given the range spotters and range setters after several days of firing to get the hits and fly-throughs desired. By this time the sections as a whole were obtaining line shots and the tracking had smoothed out considerably. The class was conducted at one of the directors. Great pains were taken to explain the exact errors that were observed being made by the range spotters and range setters during the previous day's firing. Also the errors made by other members of the range section were discussed. Spot corrections were discussed and explained in detail. Questions were welcomed and answered freely. This proved to be very satisfactory and helped most of the units in their firing.

Some of the errors observed made by the azimuth and elevation trackers were: (1) leaving rate in directors, (2) not tracking steadily (this was usually corrected after a few days on the range), and (3) turning switch *off* before pulling clutch out.

Range adjusters did not know how to collimate range finders, and during firing made too great a change in altitude for constant altitude courses. In several instances the director range switch was turned on before coincidence was obtained. The range jumped to maximum and the tracers were then observed two-thirds of the way up the cable. Such errors not only endanger the tow plane, but also may damage the range limit stops in the director as well.

Power plant operators were not alert in observing chief of section commands, and did not check the readings on the voltmeter and ammeter. When the power plant was not in use, operators failed to turn off the gas. Some operators had main load switches on when starting and stopping the unit.

Checking the level and orientation by the gun crews must be stressed continually, because they just don't understand the necessity or importance of accuracy. Invariably it was noted that a gun was out of level or out of orientation. Crews are not familiar with the three methods of orientation; especially, one pole parallelism and scribe mark parallelism. In fact the majority of units needed a great deal of instruction and training in all methods of orientation and procedure of orientation. Until this is obtained and understood there can be no good shooting. This holds true for trial fire, as most crews had not the least conception of what trial fire was or what they were doing it for. The trackers have to be thoroughly familiar with what they are looking for, and then be perfectly honest and draw the exact path of the tracer observed on the prepared sketch of reticle, not what they would like to have seen.

There was a tendency to neglect the M-55s, and most of the training was on the 40mm guns. This of course is definitely wrong, for the M-55 is equally as important a fire unit as the 40mm gun. Its crew should receive the same amount of training as the 40mm gun crews. Instructors consequently found the majority of MG gunners making innumerable mistakes, such as: not cleaning the barrels from the breech end; making solenoid adjustments with the power charger not running; running the mount with power charge off; trying to adjust solenoids with interrupter switch set for use in truck; backplate locks on lower guns wrong so that they would hit base of mount when the guns were elevated; bolt switches in the incorrect position for feeding; front and rear stop pawls reversed; bolt switches reversed; top covers not secure; and ammo loaded upside down. During firing, assistant MG gunners watched tracers instead of guns. The links and ammo were dirty causing stoppages.

The majority of the MG crews were unfamiliar with orientation, headspace and timing adjustments, and tests and adjustments for the M-55 mount. A complete understanding of the Mark XI sight was another noted weakness, and a working knowledge of the power charger was lacking. Therefore, the instructors had to spend a good bit of time on some phases that could have been covered at the armory before coming to the range. "T" blocks had to be made on the line as most of the time the units had not brought them along.

Line of metal officers, since they are drawn from the unit firing, must be well briefed and thoroughly conscious of the importance and seriousness of their job. In general, safety officers were careless in observing safety limits of fire and failed to pull the loaders and firers foot off firing pedal upon receiving command to "cease fire." Some of the safety officers were more interested in observing tracers than the safety measures of the firing point. Telephone operators on the safety phones were not always on the phones nor were they alert enough in warning the line of metals officer of the "cease fire" command; they did not always watch the tower for forthcoming signals. Guns were frequently left loaded after a course was fired, and the command was given "rear of piece, fall in." The fire lever was left on single fire instead of safe. Several times the operating handle was left in the forward position after a course was fired. More than once a loaded gun was pointed toward troops at the rear. In target practice the correction is obvious and simple. However, positive attention is required. In battle this matter is more difficult, and it is imperative to prevent needless fire on friendly troops or installations.

In all AAA automatic weapon fire there is an unfailing tendency to shoot behind the target. The gunner, or the range setter, or whoever adjusts the fire has a natural tendency to sense the tracer as having reached the target before it actually does, and consequently his adjustment places the stream of fire behind the target. This error increases progressively at ranges beyond 600 yards. This tendency is even more pronounced in battle than it is in target practice, because the gun crews will fire at excessive ranges until they are better trained.

In target practice the corrective action is to assign a capable coach to each weapon. For each course he takes position well out in the direction toward which the target is flying; at least 75 yards, and further if the range is over 1,000 yards. He notes the stream of fire through the course and comes in immediately to coach the gunner or other crew member who adjusts fire. He has been in a better position to observe the fire accuracy. The weapons should be separated sufficiently to facilitate the identification of the stream of fire from each gun and the coach should concentrate his attention on the fire from his own gun.

With well trained crews antiaircraft automatic weapons have deadly effectiveness against enemy planes within range. With poorly trained crews the fire is sad. Everybody on the battlefield can see that it is sad, and don't think they will hesitate to tell you about it!

Texas Artillery Foiled A Yank Invasion

By Major John B. B. Trussell, Jr., Arty.

Civil War lore is rich in heroic charges and knightly heroes. Yet the action which as much as any other catches the imagination was an unromantic slugging match. More than a gallant gesture, it has a sound claim to a place in history because, for the number of men involved, it was one of the war's most significant engagements.

By 1863, Union forces had occupied much of the Deep South. Texas, practically untouched by war, remained a Confederate source of men and supplies, so General N. P. Banks, commanding Federal forces in Louisiana, planned an expedition against Texas for summer of that year, using 5,000 troops under General William B. Franklin. Admiral Farragut furnished eighteen transports and four gunboats under Captain Francis Crocker—the *Arizona, Granite City, Sachem* and, flying the commodore's pennant, the *Clifton*. Franklin would steam to the Texas coast, disembark and march overland to capture Beaumont. A larger force would follow through Louisiana to join him.

Success seemed probable. Few Confederate units barred the way: Home guards garrisoned Beaumont; recruits and militia protected Houston; and Galveston, vulnerable to attack from the sea, must retain all available forces for its own defense. Beaumont's principal protection against seaborne attack was the swampy, bayou-cut plain lying between it and the Gulf. The only feasible approach was through Sabine Pass to Sabine Lake, up the lake's western shore, then cross-country for some fifteen miles. To block Sabine Pass the Confederates had erected a three-sided earthwork which, Banks and Franklin were sure, could easily be by-passed.

No hint of the expedition reached Texas. In any case, no troops, time or material were available to strengthen the defense. The fort's weakness was an accepted thing: its officers, advised to abandon it, had put the question to a vote; the men elected to remain.

• This garrison was composed of the First Texas Heavy Artillery's Company F, otherwise called the Davis Guards. Colonel Joseph J. Cook, the Annapolis graduate commanding, had instilled in his men unusually high standards of discipline. Veteran gunners, the regiment as a whole and Company F individually had been highly commended for gallantry and marksmanship on several occasions. Company F had forty-two enlisted men, a captain (F. H. Odlum) and a lieutenant (R. W. Dowling), four smoothbore guns (two twenty-four pounders and two thirty-two pounders) and two thirty-two pounder howitzers.

The task force approached the coast on the night of September 7. When it was light enough to see, Lieutenant Dowling (who commanded the earthwork in Captain Odlum's absence) reached his decision: against one gunboat alone he might have tried to bluff by putting up a show of force; but against four his only hope was an ambush.

The *Clifton* approached first. For an hour, from beyond the Confederates' range, she shelled the fort, within whose walls, spotters reported, shells repeatedly burst; but no gun spoke in reply and no sign of life was seen. Crocker decided that the earthwork had been abandoned. Nevertheless, when the *Clifton* led the *Sachem* and *Arizona* into the Pass, Crocker proceeded slowly, observing from a distance until midafternoon.

Dowling, fortunate in his unit's fine discipline, withheld fire. The men stood silently to their guns. Only when all three of the gunboats were in reach did Dowling order, "Commence firing!"

Crocker brought his ships in to a range of one thousand yards. Though his weight of metal was crushingly superior, every action the Davis Guards had fought had earned them praise for superior gunnery. Eventually their fire began to tell. After a little more than an hour's exchange, a rebel round struck the *Sachem's* boilers. As she drifted helplessly, her captain could surrender or be slaughtered. He struck his colors.

Determined to end the fight, Crocker steamed the *Clifton* up to extremely short range. But as he brought her broadside to bear, one of Dowling's rounds found her boilers and she ran aground. No course remained but to join the *Sachem* in surrender.

The *Arizona*, already damaged, withdrew to the waiting convoy. The *Granite City* had been on her way in when the *Clifton* and *Sachem* surrendered; not wishing to brave singly the opposition which had been too much for the other three gunboats combined, her captain fled without coming in range.

The fight was over. Amazingly, after an hour and a half's intensive bombardment, not a Confederate had even been wounded. But how were they to take into custody prisoners numbering perhaps five times their own strength? To make his garrison appear strong, Dowling posted a few men as

Major John B. B. Trussell, Jr., served during World War II as the Flak Analysis Officer of the 67th Fighter Wing of the Eighth Air Force in the ETO. After the war he served as a member of the Okayama Military Government Team in Japan.

sentries where they could be seen from the ships, and with the rest took charge of some 150 prisoners. Fortunately for the Confederates, reinforcements brought by the cannonade kept the Federals from discovering their captors' numerical weakness.

Throughout the fleet, three Union officers and 94 enlisted men lay dead and approximately 200 wounded. The Confederates captured eighteen cannon and quantities of ammunition, food and other supplies. General Franklin, most of his naval protection lost, could only return to New Orleans. There were, of course, charges and countercharges regarding responsibility for the failure. Some Union officers claimed that a second fort, on the other side of the Pass, and Confederate gunboats had joined the defense. Certainly it is odd that, if Southern forces besides the Davis Guards were present, they were silent when the laurels were passed out.

The Federal task force's repulse was a real victory for the South, for had Franklin's plan succeeded, Texas would almost certainly have been overrun. The Davis Guards could not alter the war's outcome, but they altered its course to the extent that they bought immunity from further major Federal attacks on the state for almost a year. Invasion and occupation came only when the entire Confederacy was crumbling.

At Jefferson Davis's behest, each participant in the action was awarded a silver medal, inscribed "D. G.", for Davis Guards, and "Sabine Pass, September 8, 1863," the only medals ever presented by the Confederacy. Few medals have been earned against heavier odds.

Write it up! Send it in!

"The main benefit of writing is to the writer. Before he can write clearly he must know the facts and have them logically arranged in his own mind. When I found my knowledge deficient in any matter connected with my work, I planned and wrote an article about it, after collecting and arranging the facts. I recommend the policy."—Rear Admiral Lucius W. Johnson, USN, Retired, in The Military Surgeon.

In this connection we are happy to report a splendid improvement in the number and quality of articles received for the JOURNAL. KEEP IT GOING.

If you have found a way to make the guns more accurate, tell us about it, whether it is a simple step, or a comprehensive program. Our readers prefer short articles, brief and to the point.

We need more articles on the maintenance of antiaircraft and motor equipment. During the last war we had too many guns and vehicles on the dead line. What are the essential factors to prevent that in the future?

To our readers in Korea we appeal for stories and photographs about the actions in ground support or in local defense. We need to hear about the mistakes, as well as the successful achievements. We are interested in enemy tactics, both by the main forces and by guerrillas.

A few healthy arguments would add tone to these columns. If you have an idea or a gripe that sounds like constructive criticism, send it in.

Notify the Journal of your change of address.

THE INFANTRY DIVISION

By Lieutenant Colonel Dorsey E. McCrory, Inf.

Infantry is the basic combat arm. The primary purpose of other ground arms and services is to project the infantry forward from objective to objective until the final objective is captured and enemy ground forces either surrender or are destroyed. It follows, then, that the infantry division is the basic combat organization in our ground forces. The infantry division is the smallest unit composed of all the essential ground arms and services which can conduct, by its own means, operations of general importance. It can:

1. *Strike and penetrate effectively.*
2. *Maneuver readily.*
3. *Readily absorb and employ reinforcing units.*
4. *Sustain action in any type of terrain.*
5. *Act alone or as part of a larger force.*

A number of changes in the organization of the infantry division manifested themselves as desirable during World War II. When the war was over in Europe and while troops were being shifted to the Pacific Theater, the more pressing of these changes were made. They included substitution of self-propelled weapons for towed weapons in the antitank and cannon companies of the infantry regiment, inclusion of the newly developed 57mm and 75mm recoilless rifles in the infantry battalion, an increase in wire construction facilities in the signal company and the increase of the military police platoon to a company. But it was not until 1946, following termination of World War II, that the present division organization was formulated. It is the result of the best thoughts evolved from war experiences. It is based on recommendations of the General Board of the European Theater, the Patch-Simpson Board, recommendations of commanders of all grades and, more specifically, of the Infantry Conference held at Fort Benning, Georgia, in June 1946, for the specific purpose of formulating its postwar organization. As with any other organization, changes, relatively minor to date, continue to be made.

Organization

Chart I shows the organization of the postwar infantry division. It consists of division headquarters, division headquarters company, a signal company, a military police company, a reconnaissance company, a band, a division headquarters medical detachment, an ordnance company, a quartermaster company, a replacement company, 3 identical infantry regiments, a medium tank battalion, a medical battalion, a combat engineer battalion and division artillery.

Division Headquarters

Division headquarters (Chart II) consists of the division commander, the assistant division commander, the chief of staff, who supervises and coordinates all staff activities within the division headquarters, and the general and special

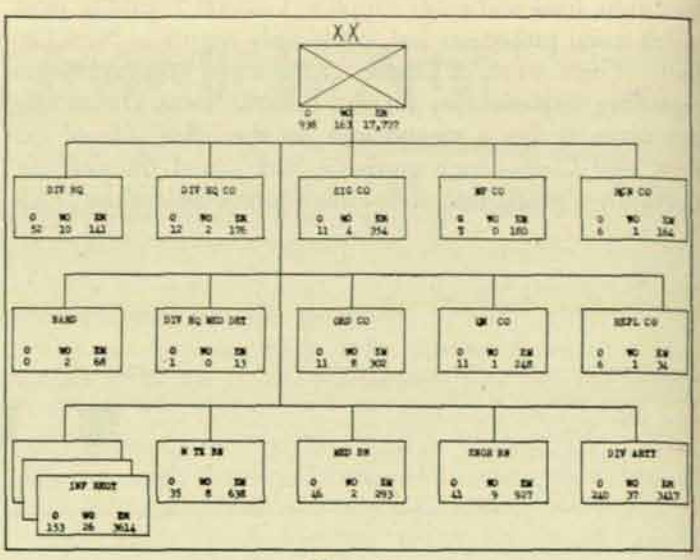

Chart I

staff sections. The general staff sections, in their respective fields of personnel and administration (G-1), intelligence (G-2), operations and training (G-3), and logistics (G-4), are the principal agencies of the division commander for planning, coordinating and supervising the activities of the division. The special staff sections are specialists in their respective fields and are the advisers to the division commander in matters pertaining thereto. The division signal officer, provost marshal, ordnance officer, quartermaster officer, engineer officer and division artillery commander act as special staff officers in addition to their duty of commanding their unit. The light aviation section and the public information section are postwar additions to the division headquarters.

The *division headquarters company* is the service unit for division headquarters. It consists of a company headquarters, a mess platoon, a transportation platoon, a defense platoon and a light aviation section. The defense platoon has three rifle squads and an antimechanized section armed with three 75mm recoilless rifles with which to establish local ground defense of division headquarters. The light aviation section is equipped with eight liaison type airplanes for courier and reconnaissance purposes.

The *signal company* contains the division signal officer's section, a headquarters platoon, a signal supply photo and maintenance section, a construction platoon and an operations platoon. This unit establishes communications within division headquarters and to subordinate units working directly under division headquarters. The construction platoon has seven wire construction teams and three wire maintenance teams with which to establish and maintain wire communications. The operations platoon consists of a message center and messenger section, a radio relay section,

a radio section and a telephone and teletype section. Radio relay and teletypewriter communication facilities are postwar additions to the company and likewise to the division. Also new are six 35mm still cameras, one 35mm movie camera and still picture processing facilities in the signal supply photo and maintenance section. These cameras may be mounted in airplanes and are intended for taking pictures for current and historical uses.

The *military police company* includes the provost marshal's section, a company headquarters, three traffic platoons and a police platoon. This unit, in the area between the regimental rear boundaries and the division rear boundary, is responsible for maintaining law and order, cooperating with civilian police agencies, controlling traffic, apprehending stragglers and deserters and guarding prisoners of war. The World War II platoon was inadequate for these purposes.

The *reconnaissance company* consists of a company headquarters and three reconnaissance platoons. Each platoon has a scout section with four ¼-ton trucks, a tank section with two light tanks, a rifle squad and a support squad armed with an 81mm mortar. Light tanks and full-tracked armored personnel carriers replace the half-track and armored car of the World War II unit. This unit has the mobility and fire power with which to secure information of the enemy and communication facilities with which to get that information back to division headquarters in time to be of use. Its mobility and fire power make it effective for preventing enemy ground reconnaissance of its parent division and also make it capable of combat action. Since its personnel are highly trained and difficult to replace, a division commander would hesitate in committing it to sustained combat unless the situation was an emergency.

The *band* is the standard division band consisting of two warrant officers and 68 enlisted men. This is a valuable and versatile unit within the division. Not everyone understands the value of the band to a division during combat. It is true that there is little place for horn playing in modern battle. But the band provides the only reserve of labor within the division, it is useful for augmenting military police, for guarding assembly areas and command posts. Many members of World War II bands wear the Purple Heart decoration because the band was the usual source of additional aid men and litter bearers when fighting was heavy and casualties surpassed the ability of medical personnel to care for them.

The *division headquarters medical detachment* operates an aid station, provides emergency medical treatment, and supervises the sanitation of the separate companies of the division which have no organic medical personnel.

The *ordnance company* includes the division ordnance officer's section, a company headquarters, a supply platoon and two maintenance platoons. In comparision with the World War II company, supply facilities have been materially increased to provide for the increased strength and fire power of the division, and maintenance facilities and equipment have been increased to provide maintenance for the increased number of weapons and vehicles in the division including a large number of full-tracked vehicles.

The *quartermaster company* contains the office of the division quartermaster, a company headquarters, a supply platoon, three truck platoons and a field service platoon. The supply platoon has Class I, Class II and IV and Class III supply sections. Each truck platoon is equipped with sixteen 2½-ton trucks and one-ton trailers. These constitute the primary source of cargo vehicles within the division. The field service platoon, a completely new addition to the company, has bath, laundry and graves registration sections.

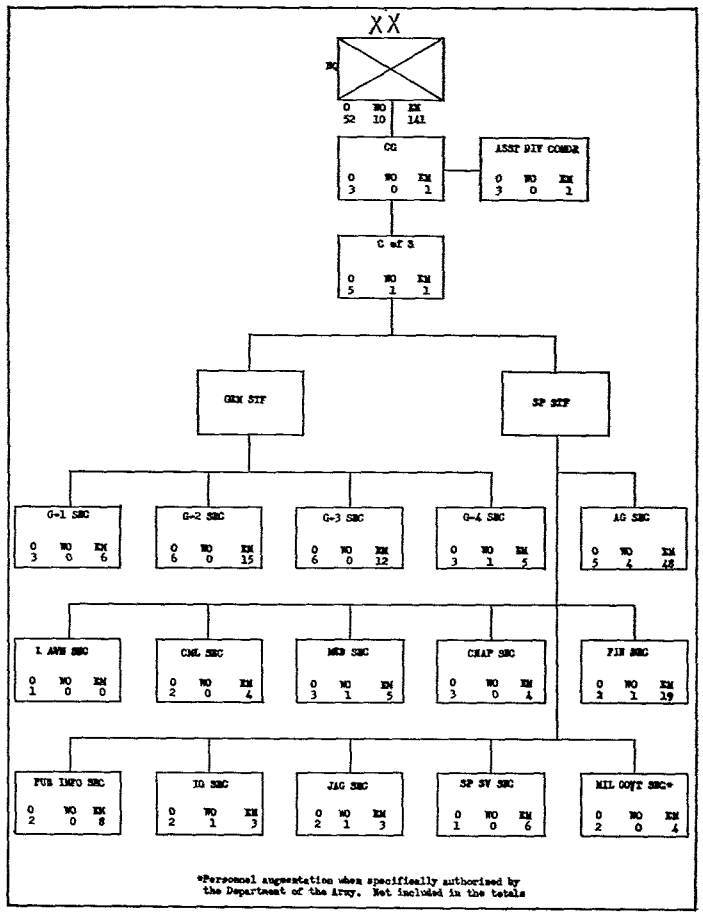

Chart II

The *replacement company* is a postwar addition to the division to meet the pressing need evidenced during the last war for an organization to administratively process, to provide special equipment and training, to battle indoctrinate and to forward to units of the division replacements received. These functions during the last war were performed, if at all, by inadequately trained and equipped special duty personnel. As a result it was found that if a replacement joining front line combat units lived through the first ten days of combat he had a good chance of survival. During this period such replacements completed self-indoctrination but casualties among them during the period were excessive. The company has a company headquarters and cadre personnel for four platoons, each of which is capable of administering approximately fifty replacements at a time.

The Infantry Regiment

An infantry regiment (Chart III) consists of a headquarters and headquarters company, a service company, a heavy mortar company, a medium tank company, a medical company and three identical infantry battalions.

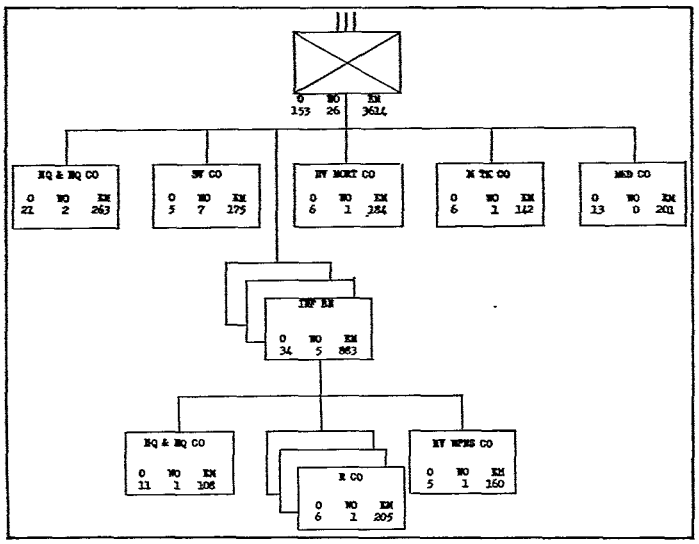

Chart III

The *headquarters and headquarters company* includes the regimental commander and his commissioned and enlisted staff except the S-4, a counterfire platoon which employs electronic sound locating devices to locate enemy weapons, a security platoon which performs the duties of military police in the regimental area, an intelligence and reconnaissance platoon, an antitank mine platoon and a communication platoon.

The *service company* consists of a company headquarters which includes the regimental S-4, the regimental administration platoon with personnel, supply and graves registration sections, and the regimental service platoon with tank maintenance and truck maintenance sections as well as gasoline, oil and ammunition vehicles for the companies of the regiment. The tank company and the medical company have organic kitchen trucks; kitchen trucks for all other companies are provided by the service platoon.

The *heavy mortar company* replaces the cannon company of World War II. It consists of a company headquarters and three platoons each of which is armed with four 4.2-inch mortars. Fire direction center methods are employed in firing. The fire power of a 4.2-inch mortar is comparable to that of a 105mm howitzer.

The *medium tank company* replaces the antitank company of World War II. It consists of a company headquarters and four platoons each of which is armed with five medium tanks mounting 90mm guns. There are two more of these tanks in company headquarters making a total of 22 tanks in the company. The company has the dual mission of providing antitank defense and close fire support for the regiment.

During World War II a *collecting company* from the division medical battalion was habitually attached to each infantry regiment. In the postwar regiment a medical company is organic. It consists of a company headquarters, a collecting platoon and three battalion platoons. The collecting platoon contains a collecting station section, a litter bearer section with 24 litter bearers and an ambulance section with nine ¼-ton ambulances. The battalion platoons provide each battalion with an aid station, twelve litter bearers and fifteen company aid men.

An *infantry battalion* consists of a headquarters and headquarters company, three rifle companies and a heavy weapons company. The *headquarters and headquarters company* includes the battalion commander and his commissioned and enlisted staff, company headquarters, an intelligence section, a communication platoon and a pioneer and ammunition platoon. The pioneer and ammunition platoon is the battalion version of engineers. It is trained to perform simple engineering tasks, primarily battlefield expedients using any available materials, and in laying and removing mines. One of its most important tasks is the operation of the battalion ammunition supply point.

A *rifle company* consists of a company headquarters, three rifle platoons and a weapons platoon. A rifle platoon consists of a platoon headquarters, three rifle squads and a weapons squad. The weapons squad, a postwar addition to the platoon, is armed with a light machine gun and a 2.36-inch antitank rocket launcher commonly called the "bazooka." During World War II it was found that a light machine gun was desirable for every engagement of the rifle platoon so one has been made organic to it. The rocket launcher provides the platoon with light, mobile, organic antitank protection. The rifle squad now consists of the squad leader, assistant squad leader, five riflemen and an automatic rifle team of two men or a total of nine men. The World War II squad consisted of twelve men. Combat conclusively proved that eleven other men are too many for one man to control as evidenced by straggling, and the ugly truth is that straggling was by no means unknown in the American Armies of World War II; and as evidenced by the fact that the highest casualty rate of any group in our combat forces was among rifle squad and platoon leaders. They had to expose themselves excessively in moving about, coordinating and controlling their overly large commands. The weapons platoon, armed with three 60mm mortars in the mortar section and three 57mm recoilless rifles in the 57mm rifle section, provides close fire support for the riflemen.

The *heavy weapons company* consists of a company headquarters, a machine gun platoon, a mortar platoon armed with four 81mm mortars and a 75mm rifle platoon armed with four 75mm recoilless rifles. The four squads of the machine gun platoon are armed with both the caliber .30 light and heavy machine guns. Both weapons are employed defensively but usually only one, the light gun, is employed offensively, particularly if the situation is fast moving and across country requiring hand carry. A caliber .30 machine gun to replace both the present guns is under development. The heavy weapons company constitutes the battalion commander's primary source of organic fire support.

The *medium tank battalion,* along with the tank company in each infantry regiment, replaces the tank battalion and tank destroyer battalion habitually attached to infantry divisions in Europe during World War II. It consists of a headquarters and headquarters and service company, three tank companies and a medical detachment. The headquarters and service company, in addition to being the command, administrative and supply unit of the battalion, contains a reconnaissance platoon. Each tank company is identical to the company contained in the infantry regiment. This battalion has the mission of providing antitank defense and close fire support for the division. It provides

the division with a highly mobile, heavily armed and armored unit capable of shock action and particularly adapted to counterattack. Tank companies of the battalion may be employed to reinforce the infantry regiments or the entire battalion may be employed with a particular regiment or as all or a part of the division reserve.

With the inclusion of organic medical companies in the infantry regiments, the *medical battalion* has been reduced to a headquarters and headquarters company, an ambulance company and a clearing company. The headquarters and headquarters company is the command, supply and administrative unit of the battalion. The ambulance company has three platoons of ten ¾-ton ambulances each and the clearing company has three clearing platoons. The clearing station established by each clearing platoon has a normal capacity of approximately 80 patients or an emergency capacity of an additional fifty per cent. A clearing station is the last medical installation through which casualties of the division are processed prior to being evacuated to field army medical installations.

The *combat engineer battalion* consists of a headquarters and headquarters and service company, four combat companies and a medical detachment. Postwar additions to the headquarters and service company are a bridge platoon, having organic equipment with which it can construct over 300 feet of fixed and floating fifty-ton bridge, and an assault platoon. Engineers are required to perform many tasks under fire to which they are vulnerable. The assault platoon is currently equipped with five dozer mounting medium tanks for performing such tasks. The equipment and maintenance platoon of the headquarters and service company has much heavy construction equipment, such as three cranes and two road graders, which makes the division engineers capable of quite heavy construction tasks. Our World War II engineer battalion had three combat companies and we entered the war thinking an engineer platoon could support an infantry regiment. We soon discovered how wrong we were. With all the tasks that engineers were called upon to perform, such as maintaining roads, executing demolitions, laying and removing mines, removing enemy obstacles and participating in assault crossing of streams and attacks of fortified positions, a company was required to adequately support a regiment. When all three regiments were in action the division engineer was hard pressed for troops for other than combat action such as maintaining the roads in the rear, building the general staff officers' houses on trailers, etc. Four combat companies should afford the division sufficient engineer troops.

Division Artillery

Division Artillery (Chart IV) still includes a headquarters and headquarters battery, three 105mm howitzer battalions, a 155mm howitzer battalion and a medical detachment. Each battalion consists of a headquarters and headquarters battery, three firing batteries and a service battery. In each firing battery the number of howitzers has been increased from four to six so that with an increase of fifteen per cent in personnel strength the fire power of the artillery has been increased by fifty per cent. This increase is reflected by slight increases in strength of the service

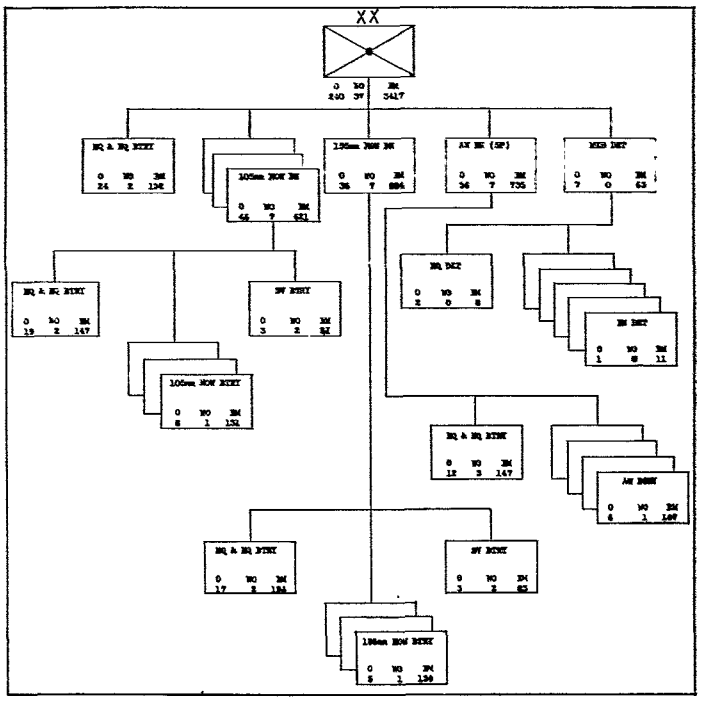

Chart IV

batteries. In each headquarters battery of the 105mm howitzer battalions, a countermortar section equipped with radar has been added. With this radar the flight of enemy shells can be picked up in the air and by reverse calculations the approximate location of the weapon which fired can be determined. Countermortar fire is then placed on the suspected weapon position. In each of the three firing batteries of the 105mm howitzer battalions are three forward observer sections which provide a section for each rifle company in the division. As it is often necessary for the 155mm howitzer battalion to employ forward observers, two forward observer sections are organic in its headquarters battery. Headquarters battery division artillery and each of the four howitzer battalions still have two liaison airplanes as formerly.

During World War II an AAA automatic weapons battalion was habitually attached to infantry divisions for antiaircraft defense. In the postwar infantry division one of these battalions, self-propelled, is organic to division artillery. It consists of a headquarters and headquarters battery and four firing batteries. Each firing battery is organized into two platoons. Each platoon is armed with four M19's mounting twin 40mm cannons and with four M16's mounting four caliber .50 machine guns. The weapons are capable of both antiaircraft defense and surface firing in close support of infantry or armor.

Summary

The present infantry division, as compared to the World War II infantry division, has increased fire power, increased mobility, includes many new weapons and items of equipment and includes as organic those units formerly habitually attached. This last primarily accounts for an increase in aggregate strength of officers and enlisted men from approximately 16,000 to approximately 19,000. The division was organized and developed based on combat experience in World War II.

News and Comment

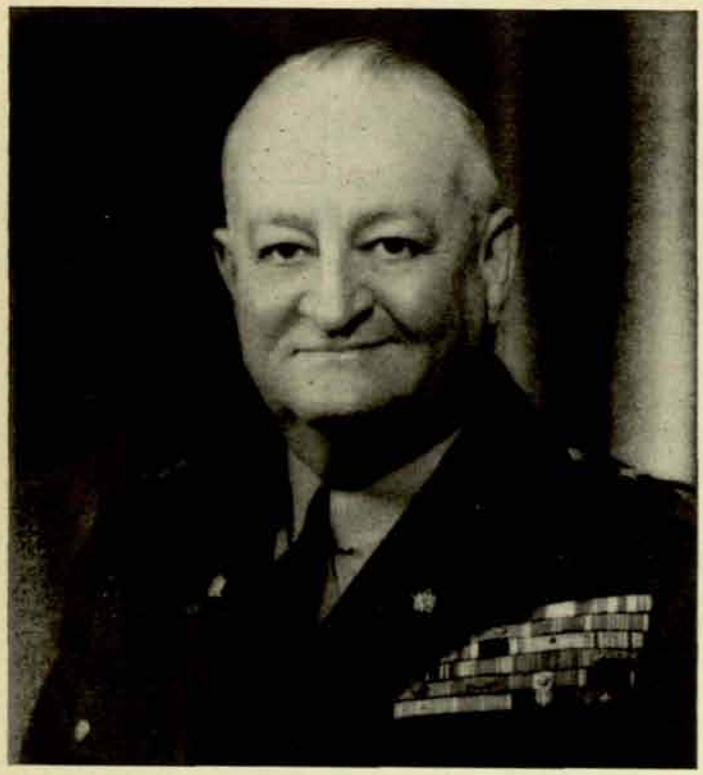

Gen. Bradshaw Assigned To EUCOM

Major General Aaron Bradshaw, Jr., well known to the JOURNAL readers as an Antiaircraft Commander in Africa and Europe, has been assigned to duty with EUCOM. With station in Heidelberg he will serve as the Assistant Chief of Staff, G-4. General Bradshaw returned from the European Theater in 1945 and has served since then on the General Staff as Assistant to G-4 in Departmental Headquarters. He has long been actively connected with the JOURNAL, serving as Editor from 1936 to 1940 and as Vice-President of the Association in 1946 and 1947. War decorations: DSM, SS, LM(OLC), BSM, and CR.

Journal Editor Transferred

As we go to press, Colonel William I. Brady, Editor of this JOURNAL from January, 1946 to June, 1950 sails for duty in the Far East. For the Executive Council, and indeed for the entire Association we express appreciation for his outstanding work as Editor. When he undertook the duty the *Coast Artillery Journal* was suffering a big drop in circulation at the close of the war. Rip Brady, as most of you know him, marched into the problem in his characteristic manner to renew life in the JOURNAL, to stimulate thought on future warfare, and to give the JOURNAL to its readers. By his tireless efforts he rallied the Association behind him to maintain the JOURNAL as a strong medium for antiaircraft artillery. He leaves the JOURNAL in sound financial condition, with a growing circulation, and with active interests in its columns.

BALLOT

UNITED STATES COAST ARTILLERY ASSOCIATION

The President and three members of the Executive Council are to be elected on this ballot, to replace officers whose terms of office expire December 31, 1950.

Please record your vote by making an "X" in the appropriate square or indicate your choice by writing the name of your candidate. Ballots received with signatures, but with no individual votes recorded, will be considered proxies for the President of the Association.

Each candidate was considered in connection with the geographic location of his residence. The Constitution of the Association requires that at least five members of the Council reside in the Washington area, and that at least three of them be on active duty, in order to facilitate the transaction of business.

Ballots received after December 31, 1950, cannot be counted.

Use the ballot below or prepare one to indicate clearly your vote. Mail to the ANTIAIRCRAFT JOURNAL, 631 Pennsylvania Avenue, N.W., Washington 4, D. C.

FOR PRESIDENT (1951-1952)

☐ Lieutenant General LeRoy Lutes, Commanding General, Fourth Army.

☐ _____

FOR MEMBERS OF THE EXECUTIVE COUNCIL

From National Guard (One Member)

☐ Brigadier General Charles G. Sage, Adjutant General, New Mexico.

☐ _____

From Organized Reserve (One Member)

☐ Colonel Thomas F. Mullaney, Jr., Commanding, 374th AA Group, ORC, Chicago, Illinois.

☐ _____

From Regular Army (One Member)

☐ Colonel Pierre B. Denson, Commanding, 35th AAA Brigade, Fort Meade, Maryland.

☐ _____

Signature _____

Rank & Organization _____

Address _____

5-50

Gen. Curtis Commands AAA at Camp Gordon, Georgia

Brigadier General Charles C. Curtis of Allentown, Pennsylvania, has returned to active duty in command of the 51st AAA Brigade at Camp Gordon, Georgia.

Having served with the 28th Division in World War I, General Curtis brought the 213th CA (AA), Pennsylvania National Guard, on active duty in 1940. He assumed command of the 33d AAA Brigade and the AAA defenses of San Diego in December 1941.

He later took the 51st AAA Brigade to Europe in 1944 and participated in the Normandy, Northern France, Rhineland, and Central Europe Campaigns.

Returning to inactive status in 1946, he was soon drawn back in service in the Guard in command of his 51st AAA Brigade! He was promoted to the grade of Major General in the Pennsylvania National Guard to command all non-divisional units. He gave up that assignment, however, to return to active duty with his 51st AAA Brigade.

The following antiaircraft artillery units of the recently Federalized National Guard are attached to the 51st AAA Brigade at Camp Gordon:

216th AAA Group, Minn., Colonel Edwin R. Bodey
209th AAA Group, N.Y., Colonel Eugene J. Welte
197th AAA Group, N.H., Colonel Albert S. Baker
151st AAA Operations Detachment, Penn.
115th AAA Operations Detachment, Wash.
105th AAA Operations Detachment, N.Y.
173d AAA Operations Detachment, Mass.
238th AAA Gun Bn., Conn., Major J. S. Winthrop
745th AAA Gun Bn., Conn., Lt. Col. G. B. Webster
736th AAA Gun Bn., Del., Lt. Col. F. T. Lynch
703d AAA Gun Bn., Maine, Lt. Col. J. Rossnagel
102d AAA Gun Bn., N.Y., Lt. Col. W. E. Harper
715th AAA Gun Bn., N.Y., Lt. Col. W. H. Uter
707th AAA Gun Bn., Penn., Lt. Col. Francis Fulton, Jr.
705th AAA Gun Bn., R.I., Lt. Col. M. P. DiFusco
711th AAA Gun Bn., Ala., Lt. Col. N. J. Walton
213th AAA Gun Bn., Penn., Lt. Col. Kenneth A. Michael

U. S. Releases Guide For Atomic Defense

Mass public hysteria and thoughtless panic probably would cause more deaths than atom bombs themselves in the event the U. S. was subjected to an atomic attack, according to a new guide to defense planning recently issued by the Defense Department in co-operation with the Atomic Energy Commission.

Proper planning and organization will save many lives which otherwise would be lost, the book, "The Effects of Atomic Weapons," declares.

The book presents data resulting from studies of the bombings in Japan during World War II, and explosions at Alamogordo and Bikini, indicating that advance planning would be of tremendous benefit no matter how severe the attack.

A disciplined civil population could do much to reduce damage and casualties, the book shows.

An atomic bomb bursting high in the air above a target confines the radiation danger to the first few minutes and leaves no lingering contamination, the report states. On the other hand, an underwater or low ground explosion might present a radiation problem for months or even years. These circumstances indicate the need for planning to deal with each type of bombing.

An American city bombed with the type of weapon used in Japan in World War II, could expect demolition of all buildings within a half-mile radius, according to the guide. This type bomb is equal to 20,000 tons of T.N.T.

Buildings between half a mile and a mile and a quarter would be made unsafe for use. Between a mile and a mile and three quarteres, the damage would range from severe to moderate. Brick and stone facing probably would be reduced to rubble.

There would be little hope for the survival of people caught within a half-mile radius of an explosion, the book asserts.

The only radiation danger is direct exposure to gamma rays which are released during the first ten seconds after the explosion. These rays will kill within a radius of 4,000 feet. Even the simplest kind of shelter would provide a great measure of protection, the book says. A cellar so reinforced that it would not cave in might suffice.

Shelters would offer good protection in the case of an underwater or low ground blast. People in such shelters should remain there for two to four hours. As soon as possible afterward, they should scrub themselves thoroughly with soap and water, and discard any clothing that might have been in contact with radioactive dirt or water.—AFPS

New 'Chute May Solve Jump Danger

The Air Force has developed a new automatic parachute which it believes will largely solve the problem of escape

from disabled aircraft at high altitudes and terrific speeds.

The new 'chute opens with an appropriate delay after the pilot bails out, and at a proper distance above the earth, relieving the flyer of the necessity for judgment of these factors.

Leaving the plane, the pilot is required only to pull a ball type handle which is connected by cable with the automatic release. The release works only after the pilot is far enough from the plane to prevent entanglement, but high enough to assure a safe landing.

The timing device which provides a safe interval before the 'chute opens, is adjustable to from one to 26 seconds. A delay of five to seven seconds is usually sufficient to reduce the velocity of the fall to a safe degree.

The altitude control prevents operation of the 'chute release above the preset distance from the earth. Before take-off, the control is set for a height of 5,000 feet above the highest point of the terrain over which the plane is expected to fly.

If, for instance, the highest point should be 7,000 feet, the altitude control would be set for 12,000 feet. Should it become necessary to abandon the plane at an altitude of 40,000 feet, the parachute would not open until after a free fall of 28,000 feet.

At 40,000 feet the shock of the 'chute opening is four times greater than at sea level. Also, if the parachute opens at this altitude the descent will take longer and the lack of oxygen and extreme cold would be dangerous.—AFPS

U. S. to Install Radar Sites For Guided Missile Tests

American history is being made in and around the Bahama Islands with Bahamian approval for the U. S. to develop radar-tracking observation stations for its guided missile program.

The Bahamian House of Assembly recently passed a bill implementing a treaty signed by the United States and Great Britain calling for joint development of rockets and other long range guided missiles.

With the go-ahead signal for the 3,000-mile testing range for guided missiles, the Bahamas add another chapter in U. S. history.

The islands already hold a special spot in Americana since it was at San Salvador (Watling) Island that Christopher Columbus first reached the New World in 1492.

The Bahama Islands have an ideal geographic position for the guided missile job. Those nearest to the U. S. lie only 52 miles from the Florida coast, notes the National Geographic Society, while the archipelago's southern extremity, Great Inagua Island, reaches to within a few miles of Cuba and Haiti.—AFPS

22-Pound Field Switchboard Adopted As Standard By Army

A 22-pound field switchboard with twice the capacity of heavier equipment which it will replace has been adopted by the Army as standard equipment, it was announced.

The new switchboard will go into production this year. It has twice the capacity, less than half the weight, and less than one-third the size of the smallest standard field switchboard now used by the Army. In addition, it has retractable cords which stay clear of battlefield mud and water. When not in use, it can be folded into a case and carried like a portable typewriter.

One of the new boards will provide switching service for 12 lines, but it is possible to stack as many as three boards, one above the other, to increase capacity. By slight modification of the boards when stacked, a maximum capacity of 46 lines is possible.

The new equipment was developed by the Signal Corps Engineering Laboratories, Fort Monmouth, New Jersey.

Two boards in current use will be replaced by the new one. One of the older boards weighs 48 pounds and has a capacity of six lines. The other, with a 12-line capacity, weighs 72 pounds.

Officially designated the SB-22/PT ("SB" for switchboard and "PT" for portable telephone), the new equipment is designed to withstand immersion in water in packed condition and to be highly resistant to the effects of extremes of temperature and humidity likely to be encountered in field operations. The board also is designed to withstand vibration and shock of the type normally encountered in transportation, loading or unloading under field conditions, or when dropped by parachute.

Circuit components of the board are contained in units which may quickly and easily be replaced in event of failure. Interchangeability of parts with other types of switchboards will minimize repair and maintenance problems.

U. S. Military Policy: 1950

In the October issue, *U. S. Army Combat Forces Journal*, General Omar N. Bradley contributes U. S. Military Policy: 1950. This forthright article, which also appears in the October issue of *Reader's Digest*, is of vital interest to American soldiers and citizens alike.

New Special Text Released at Fort Bliss

ST 44-4-3 Field Artillery Gunnery For Heavy AAA (Restricted) is the latest publication of the AAA and GM Branch of The Artillery School. Authorized personnel may procure copies through the Book Store, Fort Bliss, Texas.

Going To War?

If you are leaving for a new assignment, our Circulation Manager is very much concerned. Please notify us of your change of address to avoid lost motion in getting your JOURNAL to you.

Your friends are also interested. This issue contains the annual address listings of subscribers. Send your change before November 5th. It will be included in the supplementary listing in the November-December issue.

ARTILLERY ORDERS

DA Special Orders Covering July 1 through August 31, 1950. Promotions and Demotions not included.

COLONELS

Boyd, H. R., to stu Det Army War College, Ft Leavenworth, Kans.
Brady, W. I., to Far East Comd, Yokohama, Japan.
Carpenter, G. R., to Office Chief AFF, Ft Monroe, Va.
Connor, R. T., to 110th ASU New England Sub Area, Boston, Mass.
Craig, M., Jr., to Office Chief AFF, Ft Monroe, Va.
Dingeman, R. E., to 6517th ASU Nev NG Instr Gp, Reno, Nev.
Dingley, N., to OARMA, Stockholm, Sweden.
Ely, L. B., to Far East Comd, Yokohama, Japan.
Englehart, C., to 4052d ASU AAA and GM Cen, Ft Bliss, Tex.
Gard, H. P., to 19th AAA Gp, Ft Meade, Md.
Goff, J. L., to 31st AAA Brig, Ft Lewis, Wash.
Haakensen, N. T., to 4052d ASU AAA and GM Cen, Ft Bliss, Tex.
Hause, F. A., to 2327th ASU Del ROTC Instr Gp, Univ of Del, Newark, Del.
Heilforn, M., to 6513th ASU Calif ORC Instr Gp, San Francisco, Calif.
Higgins, C. W., to AGO, Wash, DC.
Jackson, H. R., to 1122d ASU Mass ORC Instr Gp, Boston, Mass.
Kane, F. B., to Office Chief AFF, Ft Monroe, Va.
Lavery, A. L., to Far East Comd, Yokohama, Japan.
McFadden, W. C., to 6515th ASU Utah ROTC Instr Gp, Logan, Utah.
McNamee, W. L., to Far East Comd, Yokohama, Japan.
Nelson, P. B., to 4054th ASU AAA and GM Cen, Ft Bliss, Tex.
Schultz, M. H., to 3340th ASU Ala NG Instr Gp, Savannah, Ga.
Scott, W. W., to Far East Comd, Yokohama, Japan.
Thompson, E. B., to OC of S, Wash, DC.
Utke, R. O., to 6516th ASU Wash NG Instr Gp, Olympia, Wash.
Wilder, A. E., to OC of S, Wash, DC.
Wortman, V. W., to 2306th ASU Ohio Mil Dist, Ft Hayes, Ohio.
Zimmer, L. A., to 22d AAA AW Gp, Ft Custer, Mich.

LIEUTENANT COLONELS

Abbey, W. W., to 6514th ASU Ore Mil Dist Hq, Vancouver Bks, Wash.
Albergotti, J. S., to Hq 3d Army, Ft McPherson, Ga.
Anderson, C. A., to 31st AAA Brig, Ft Lewis, Wash.
Ashworth, E. T., to OJC of S, Wash, DC.
Barton, C. T., to 35th AAA Brig, Ft Meade, Md.
Cooper, H. B., Jr., to 35th AAA Brig, Ft Meade, Md.
Cox, L., to 504th AAA Gun Bn, Ft Custer, Mich.
Elliott, C. B., Jr., to Stu Det AA and GM Br Arty Sch, Ft Bliss, Tex.
Fish, J. H., to Hq 3d Army, Ft McPherson, Ga.
Gayle, F. C., to 2128th ASU, Ft Knox, Ky.
Heasty, C. F., Jr., to Stu Det Hq 1st Army Princeton Univ, Princeton, NJ.
Hudiburg, H. B., to Far East Comd, Yokohama, Japan.
Johnson, H. O., to 3d AAA AW Bn, Ft Benning, Ga.
Keating, J. W., to EUCOM, Bremerhaven, Germany.
Kush, G. L., to Far East Comd, Yokohama, Japan.
Leary, T. H., to 4052d ASU AAA and GM Cen, Ft Bliss, Tex.
Leidy, R. L., to 4052d ASU AAA and GM Cen, Ft Bliss, Tex.
Lessard, W. E., Jr., to 4052d ASU AAA and GM Cen, Ft Bliss, Tex.
Love, H. L., to Hq Sixth Army, San Francisco, Calif.
McCormick, G. E., to 6516th ASU Wash NG Intr Gp, Seattle, Wash.
Nichols, W. R., to Hq Fifth Army, Chicago, Ill.
Nye, D. B., to Far East Comd, Yokohama, Japan.
Olivares, J. E., to Stu Det AA and GM Br Arty Sch, Ft Bliss, Tex.
Orrick, E. G., to Stu Det AA and GM Br Arty Sch, Ft Bliss, Tex.
Page, R. M., Jr., to 4052d ASU AAA and GM Cen, Ft Bliss, Tex.
Penn, W. S., Jr., to Stu Det AA and GM Br Arty Sch, Ft Bliss, Tex.
Powers, A. B., to 4305th ASU Tex NG Instr Gp, El Paso, Tex.
Redden, F. R., to 6515th ASU Utah Mil Dist, Ft Douglas, Utah.
Rumph, R. W., to Stu Det Ohio State Univ, Columbus, Ohio.
Santos, M. M., to 6002d ASU Presidio of San Francisco, Calif.
Schreiber, W. L., to OC of S, Wash, DC.
Shumate, E. H., to 4052d ASU AAA and GM Cen, Ft. Bliss, Tex.
Smith, R. G., Jr., to 4052d ASU AAA and GM Cen, Ft Bliss, Tex.
Spengler, H. M., to Far East Comd, Yokohama, Japan.
Stevens, J. D., to OC of S, Wash, DC.
Stone, J. E., to 4050th ASU Arty Sch, Ft Sill, Okla.
Swain, O., to 4052d ASU AAA and GM Cen, Ft Bliss, Tex.
Thorkelson, W. L., to OC of S, Wash, DC.
Wickham, K. G., to Far East Comd, Yokohama, Japan.
Wilder, G. B., to 8th Inf Div, Ft Jackson, SC.

MAJORS

Ayer, F. A., to Hq Fourth Army, Ft Sam Houston, Tex.
Backstrom, B. H., to 35th AAA Brig, Ft Meade, Md.
Bogue, W. B., to 2559th ASU DS NG Instr Gp, Ft Myer, Va.
Campbell, J. E., to 9th AAA Gun Bn, Ft Bliss, Tex.
Coleman, H. P., to 6513th ASU Calif NG Instr Gp, San Jose, Calif.
Degyansky, W., to AGO, Wash, DC.
Donovan, M. W., to Far East Comd, Yokohama, Japan.
Edwards, R. R., to 1202d ASU Det 2 USA and USAF Rct Sta, NY, NY.
Eichler, T. O., to OC of S, Wash, DC.
Farrar, W. L., to Stu Det Army Lang Sch, Presidio of Monterey, Calif.
Fredrickson, E. C., to EUCOM, Bremerhaven, Germany.
Frei, J. K., to Stu Dtt AA and GM Br Arty Sch, Ft Bliss, Tex.
Godfrey, A. J., to 5107th ASU USA and USAF Rct Svc Gp, Mankato, Minn.
Grabove, M., to AAA and GM Cen, Ft Bliss, Tex.
Graham, H. E., to AAA and GM Cen, Ft Bliss, Tex.
Greenberg, B. I., to 4052d ASU AAA and GM Cen, Ft Bliss, Tex.
Gushurst, C. E., to 4052d ASU AAA and GM Cen, Ft Bliss, Tex.
Hansen, G. R., to 82d AAA AW Bn, Ft Lewis, Wash.
Hanson, A. F., to 31st AAA Brig, Ft Lewis, Wash.
Haymaker, G. L., to Far East Comd, Yokohama, Japan.
Hendry, J. E., Jr., to 4052d ASU AAA and GM Cen, Ft Bliss, Tex.
Hertz, C. E., to 3441st ASU MP Sch, Cp Gordon, Ga.
Hilton, E. H., to 4052d ASU AAA and GM Cen, Ft Bliss, Tex.
Lambert, W. H., to 4052d ASU AAA and GM Cen, Ft Bliss, Tex.
Lederman, M. D., to 3350th ASU Fla NG Instr Gp, Pensacola, Fla.
McCaffrey, B., Jr., to Hq Sixth Army, San Francisco, Calif.
Nelson, H. H., to Far East Comd, Yokohama, Japan.
O'Connell, F. J., to Far East Comd, Yokohama, Japan.
Palizza, M. J., to 1129th ASU NH NG Instr Gp, Laconia, NH.
Petros, H. C., to 3320th ASU NC Ord Instr Gp, Wilmington, NC.
Polifka, J. F., to 4054th ASU AAA and GM Cen, Ft Bliss, Tex.
Reiman, L. N., to EUCOM, Bremerhaven, Germany.
Rousseau, W. S., to Sta Compl, Cp Breckinridge, Ky.
Schwartz, E. G., to 4052d ASU AAA and GM Cen, Ft Bliss, Tex.
Shagrin, R. A., to 4052d ASU AAA and GM Cen, Ft Bliss, Tex.
Shivers, G. W., to 4052d ASU AAA and GM Cen, Ft Bliss, Tex.
Sims, C. W., to 31st AAA Brig, Ft Lewis, Wash.
Sullivan, J. A., to 4052d ASU AAA and GM Cen, Ft Bliss, Tex.
Tison, G. J., to EUCOM, Bremerhaven, Germany.
Turner, H. J., Jr., to Far East Comd, Yokohama, Japan.
Williams, W. F., to Stu Det AA and GM Br Arty Sch, Ft Bliss, Tex.

CAPTAINS

Babb, L. D., to Stu Det Army Lang Sch, Presidio of Monerey, Calif.
Bechel, C. R., to 4052d ASU AAA and GM Cen, Ft Bliss, Tex.
Betts, G., to Stu Det Arty Sch, Ft Sill, Okla.
Bianchi, J. J., to 7689th Hq Gp USEA, Salzburg, Austria.
Bishop, L. O., to Ryukyus Comd, Okinawa.
Branter, H. R., to 31st AAA Brig, Ft Lewis, Wash.
Coggins, S. M., to 31st AAA Brig, Ft Lewis, Wash.
Corby, R. F., to 4052d ASU AAA and GM Cen, Ft Bliss, Tex.
Feaster, B. L., to Third Army Sta Compl, Ft Jackson, SC.
Griffin, B. B., to Hq Sixth Army, San Francisco, Calif.
Haney, R. W., to EUCOM, Bremerhaven, Germany.
Haughton, R. E., to Stu Det Univ of Mo, Columbia, Mo.
Hecht, C. M., to 2108th ASU Sta Compl, Cp Breckinridge, Ky.
Herbert, D. L., to 31st AAA Brig, Ft Lewis, Wash.
Hogan, J. H., to Stu Det AA and GM Br Arty Sch, Ft Bliss, Tex.
Izquierdo, O. M., to Far East Comd, Yokohama, Japan.
Jansen, F. J., to Stu Det AA and GM Br Arty Sch, Ft Bliss, Tex.
Jennings, H. M., to 2108th ASU Sta Compl, Cp Breckinridge, Ky.

Johnaton, A. B., to 88th Abn AA Bn, Ft Campbell, Ky.
Lagouros, J. E., to Stu Det CIC Cen, Ft Holabird, Md.
McGarry, W. L., to 113th CIC Det, Chicago, Ill.
Nagelmann, B. R., to 4th Inf Div, Ft Ord, Calif.
Pappas, G. S., Office Scty of Def, Wash, DC.
Policastro, J. J., to 4052d ASU AAA and GM Cen, Ft Bliss, Tex.
Queen, D. R., to Stu Det AA and GM Br Arty Sch, Ft Bliss, Tex.
Roof, D. B., to 2305th ASU WVa Mil Dist, S Charleston, WVa.
Shelton, F. W., to 3320th ASU NC NG Instr Gp, Whiteville, NC.
Snead, J. A., to 4201st ASU Mil Proc, Ft Sam Houston, Tex.
Stephens, C. E., to 450th AAA AW Bn, Ft Ord, Calif.
Vredenburgh, F. R., to 31st AAA Brig, Ft Lewis, Wash.
Washbourne, K. V., to 4052d ASU AAA and GM Cen, Ft Bliss, Tex.

FIRST LIEUTENANTS

Adams, D. W., to 31st AAA Brig, Ft Lewis, Wash.
Allen, R. H., Jr., to 35th AAA Brig, Ft Meade, Md.
Balchinas, B. R., to 4th Inf Div, Ft Ord, Calif.
Bergschneider, F. F., to 9th Inf Div, Ft Dix, NJ.
Byrne, J. J., to Stu Det AA and GM Br Arty Sch, Ft Bliss, Tex.
Cochis, G. A., to 503d CIC Det, Louisville, Ky.
Covington, C. W., to 4052d ASU AAA and GM Cen, Ft Bliss, Tex.
Creel, N. E., to 4052d ASU AAA and GM Cen, Ft Bliss, Tex.
Daniels, G. B., to Stu Det AF Ln Pilot Sch, Connally AFB, Tex.
Dwyer, J. W., 3d., to Stu Det AA and GM Br Arty Sch, Ft Bliss, Tex.
Elliott, H. W., to 450th AAA AW Bn, Ft Ord, Calif.
Ferguson, J. M., to Stu Det AA and GM Br Arty Sch, Ft Bliss, Tex.
Ferguson, L. P., to 22d AAA Gp, Ft Custer, Mich.
Finnegan, D. J., to Stu Det AA and GM Br Arty Sch, Ft Bliss, Tex.
Forteau, M. B., to Stu Det AA and GM Br Arty Sch, Ft Bliss, Tex.
Geary, J. C., to Stu Det AF Ln Pilot Sch, Connally AFB, Tex.
Gillespie, B., to 35th AAA Brig, Ft Meade, Md.
Graeff, G. R., to 4052d ASU AAA and GM Cen, Ft Bliss, Tex.
Hamer, J. E., to 82d Abn Div, Ft Bragg, NC.
Helya, M. D., to 3d AAA AW Bn, Ft Benning, Ga.
Higdon, K. T., to Stu Det Army Lang Sch, Monterey, Calif.
Hoyt, K. D., to 4052d ASU AAA and GM Cen, Ft Bliss, Tex.
Kane, R. V., to Stu Det AA and GM Br Arty Sch, Ft Bliss, Tex.
Kelley, P. A., to Stu Det AA and GM Br Arty Sch, Ft Bliss, Tex.
Kuneman, L. E., to EUCOM, Bremerhaven, Germany.
Lay, J. S., to 9th AAA Gun Bn, Ft Bliss, Tex.
Lieberman, H. A., to 3540th ASU Atlanta Gen Depot, Atlanta, Ga.
Lockard, S. E., to Stu Det ASA Sch, Carlisle Bks, Pa.
McCoy, R. W., to Stu Det AA and GM Br Arty Sch, Ft Bliss, Tex.
McDemott, J. P., to 4052d ASU AAA and GM Cen, Ft Bliss, Tex.
McGrane, J. A., to 4052d ASU AAA and GM Cen, Ft Bliss, Tex.
McGovern, T. F., Jr., to 9th AAA Gun Bn, Ft Bliss, Tex.
Marvin, E. A., to Stu Det ASA Sch, Carlisle Bks, Pa.
Morgan, W. R., to Stu Det AA and GM Br Arty Sch, Ft Bliss, Tex.
Mosier, H. L., to 11th Abn Div, Ft Campbell, Ky.
Muhl, J. P., to 113th CIC Det, St Louis, Mo.
Mullen, W. J., Jr., to 9th AAA Gun Bn, Ft Bliss, Tex.
Murray, C. W., to Stu Det Arty Sch, Ft Sill, Okla.
Newton, J. B., to 4107th ASU Det Red River Arsenal, Texarkana, Tex.
Norton, H. A., to 31st AAA Brig, Ft Lewis, Wash.
Parker, W. R., to 88th Abn AA Bn, Ft Campbell, Ky.
Pepin, E. A., to Stu Det AA and GM Br Arty Sch, Ft Bliss, Tex.
Pfauth, E. V., to Stu Det AA and GM Br Arty Sch, Ft Bliss, Tex.
Pinkett, M. F., to 4052d ASU AAA and GM Cen, Ft Bliss, Tex.
Roller, H. N., to Stu Det AA and GM Br Arty Sch, Ft Bliss, Tex.
Sadler, J. A., to Stu Det AA and GM Br Arty Sch, Ft Bliss, Tex.
Stalin, G. S., to 9th AAA Gun Bn, Ft Bliss, Tex.
Stewart, D. L., to EUCOM, Bremerhaven, Germany.
Swan, V. B., to 9th AAA Gun Bn, Ft Bliss, Tex.
Tharp, B. S., Jr., to Stu Det AA and GM Br Arty Sch, Ft Bliss, Tex.
Title, S. H., to Stu Ret AA and GM Br Arty Sch, Ft Bliss, Tex.
Uhls, W. C., to 4th Inf Div, Ft Ord, Calif.
Wallace, J. A., Jr., to Stu Det AA and GM Br Arty Sch, Ft Bliss, Tex.
Youngs, E. C., to Stu Det AA and GM Br Arty Sch, Ft Bliss, Tex.

SECOND LIEUTENANTS

Akers, H. W., to 31st AAA Brig, Ft Lewis, Wash.
Barlow, R. C., to AAA and GM Cen, Ft Bliss, Tex.
Belford, R. E., to 31st AAA Brig, Ft Lewis, Wash.
Bickmore, D. G., to 31st AAA Brig, Ft Lewis, Wash.
Buchanan, B. C., to Far East Comd, Yokohama, Japan.
Burchett, H. D., to 4052d ASU AAA and GM Cen, Ft Bliss, Tex.
Branigan, W. F., to 3d AAA AW Bn, Ft Benning, Ga.
Brumme, G. A., to 22d AAA Gp, Ft Custer, Mich.
Carver, J. O., to 22d AAA Gp, Ft Custer, Mich.
Clark, R. T., to 31st AAA Brig, Ft Lewis, Wash.
Coxe, R. L., to 22d AAA Gp, Ft Custer, Mich.
Dalrymple, R. K., to 22d AAA Gp, Ft Custer, Mich.
Day, H. C., Jr., to 22d AAA Gp, Ft Custer, Mich.
Day, L., to 450th AAA AW Bn, Ft Ord, Calif.
Douglas, J. J., to 31st AAA Brig, Ft Lewis, Wash.
Etzold, D. E., to Far East Comd, Yokohama, Japan.
Fields, H. P., to 22d AAA Gp, Ft Custer, Mich.
Gainey, M. A., to 35th AAA Brig, Ft Meade, Md.
Gaunier, P. L., to 22d AAA Gp, Ft Custer, Mich.
Glover, W. D., to 4052d ASU AAA and GM Cen, Ft Bliss, Tex.
Golding, T. H., to 82d AAA AW Bn, Ft Lewis, Wash.
Gravois, F. D., to 4052d ASU AAA and GM Cen, Ft Bliss, Tex.
Gross, M. G., to 31st AAA Brig, Ft Lewis, Wash.
Hatcher, W. E., to 4052d ASU AAA and GM Cen, Ft. Bliss, Tex.
Henderson, J. M., to 31st AAA Brig, Ft Lewis, Wash.
Holst, M., to US Army Caribbean, Ft Amador, CZ.
Irvine, J. M., to Far East Comd, Yokohama, Japan.
Jackson, J. W., to Stu Det AA and GM Br Arty Sch, Ft Bliss, Tex.
Jewkes, L. D., to 31st AAA Brig, Ft Lewis, Wash.
Keller, M. J., to 5th AAA AW Bn, Ft Sheridan, Ill.
Lehr, G. F., to 4054th ASU AAA and GM Br Arty Sch, Ft Bliss, Tex.
Leishman, C. A., to 31st AAA Brig, Ft Lewis, Wash.
Lemke, M. M., to 22d AAA Gp, Ft Custer, Mich.
Livingston, R. E., to 22d AAA Gp, Ft Custer, Mich.
Lyons, D. B., to 4052d ASU AAA and GM Cen, Ft Bliss, Tex.
McKeen, R. C., to 22d AAA Gp, Ft Custer, Mich.
Meyerhoff, S. A., to 4052d ASU AAA and GM Cen, Ft Bliss, Tex.
Miller, S. A., to Stu Det AA and GM Br Arty Sch, Ft Bliss, Tex.
Morgan, D., to 88th AA Abn Bn, Ft Campbell, Ky.
Nave, N. R., to 5th AAA AW Bn, Ft. Sheridan, Ill.
Prewitt, W. D., to Stu Det AA and GM Br Arty Sch, Ft Bliss, Tex.
Radford, L. E., to 31st AAA Brig, Ft Lewis, Wash.
Ream, F. D., to 60th AAA AW Bn, Ft Scott, Calif.
Rondepierre, J. R., to 31st AAA Brig, Ft Lewis, Wash.
Sakowski, J. M., to 35th AAA Brig, Ft Meade, Md.
Sanders, B. L., to 3d Inf Div, Ft Benning, Ga.
Sehorne, J. D., Jr., to 3d Inf Div, Ft Benning, Ga.
Seydel, L. G., to 5th AAA AW Bn, Ft Sheridan, Ill.
Shear, H. W., to 80th AAA Gp, Ft Devens, Mass.
Silk, T. R., Jr., to 82d AAA AW Bn, Ft Lewis, Wash.
Smithea, W. R., to Far East Comd, Yokohama, Japan.
Spann, C. O., to 3d AAA AW Bn, Ft Benning, Ga.
Starman, C. D., to Stu Det AF Ln Pilot Sch, Connally AFB, Tex.
Swim, C. H., to Stu Det MP Sch, Cp Gordon, Ga.
Taylor, F. R., to 60th AAA AW Bn, Ft Scott, Calif.
Vanderbleek, J., to 4052d ASU AAA and GM Cen, Ft Bliss, Tex.
Ward, J. W., to 4052d ASU AAA and GM Cen, Ft Bliss, Tex.
Ware, W. O., to 4052d ASU AAA and GM Cen, Ft Bliss, Tex.
Welty, R. G., Jr., to 22d AAA Gp, Ft Custer, Mich.
Whayne, A. S., to 31st AAA Brig, Ft Lewis, Wash.
Woedman, W. R., to 4052d ASU AAA and GM Cen, Ft Bliss, Tex.

Election of Officers

Members are urged to use the Association ballot on page 60, and vote. The Nominating Committee has selected a slate. If you like it, support it, because their election is not necessarily assured. This is not a steam-roller affair. Two years ago an interested group elected their own candidate. That interest was fine for the Association, and it also gave the Association an outstanding Council member. VOTE!

Newly Revised Edition of the

GUIDED MISSILE PAMPHLET

Now in its third printing, this edition has been brought completely up to date and is immediately available.

"Your compilation of selected Guided Missiles articles has brought some of the tools of 'Push-button' warfare out of the clouds and within reach of the average officer. The material, presented in one pamphlet, free of technical details, should prove to be a valuable reference work for officers who, although not directly associated with guided missiles, may wish to keep themselves on speaking terms with revolutionary new developments."—CAPTAIN J. H. SIDES, U.S. NAVY, Deputy Assistant Chief of Naval Operations (Guided Missiles).

"I think the articles are fine and are suitable for Regular, Reserve and National Guard use."—BRIGADIER GENERAL WILLIAM L. RICHARDSON, USAF, Chief, Guided Missile Group, Office, Deputy Chief of Staff, Operations.

"I have read with great interest the pamphlet entitled 'Guided Missiles' that you compiled from articles that have appeared in the JOURNAL.

"In my opinion, this pamphlet is an excellent means of acquainting the average officer with some of the technical aspects of guided missiles and with the many problems facing the research and development agencies in their work on these new weapons. Written by recognized experts, these articles present the basic principles of the various components of guided missiles, in an interesting and not too technical manner."—LIEUTENANT COLONEL JAMES G. BAIN, Ordnance Department, Chief, Guided Missiles Section, Rocket Branch, Research and Development Division.

You will not want to miss this authentic and factual compilation of Journal Guided Missile Articles.

Price $1.00 for paper-bound copy and

$2.00 for permanent-bound copy

ORDER NOW

Antiaircraft JOURNAL

631 Pennsylvania Avenue, N.W. **WASHINGTON 4, D. C.**

THE ORAVISUAL EASEL

MODEL D2

"Oravisual Easel is highly recommended by this unit" . . . Captain, S.C.N.G.

Price $46.50

With Special

Discount to

Journal Subscribers

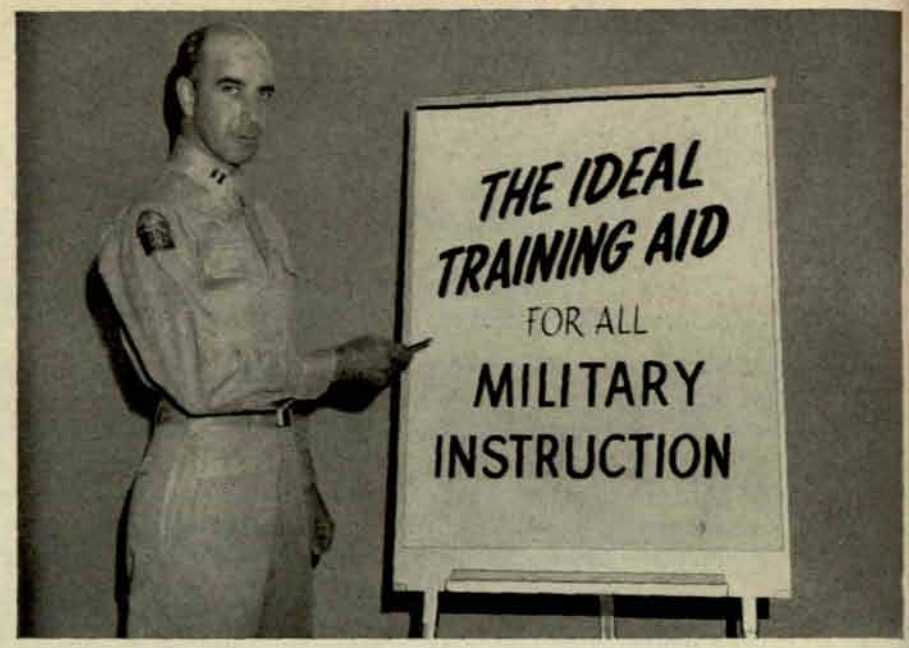

offers you all these features . . .

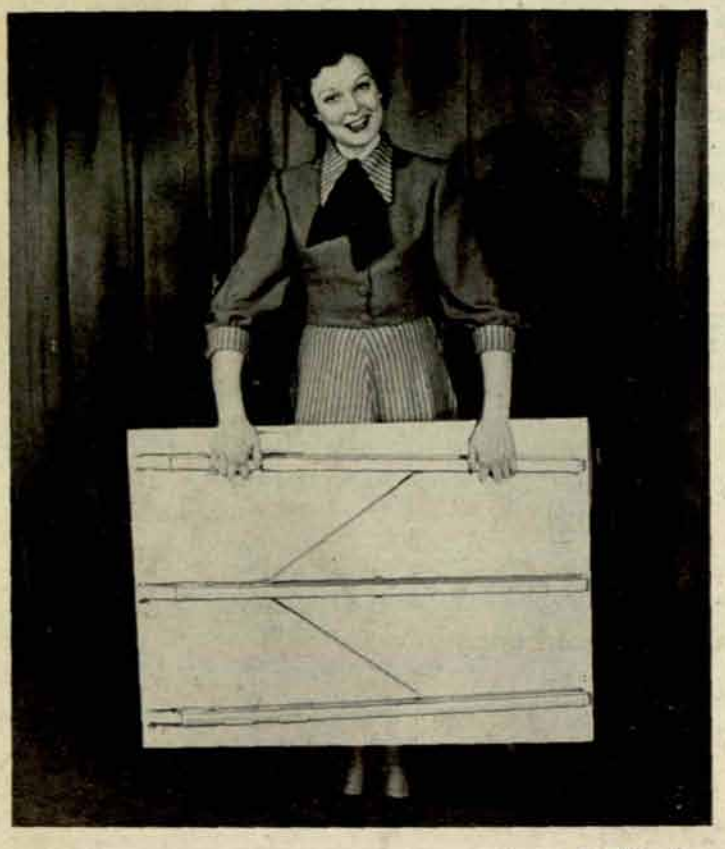

- ★ ***ALL ALUMINUM.*** Not a splinter of wood to warp, wear or tear.
- ★ ***LIGHT AS A FEATHER***—almost. Only eight pounds if you want us to be technical.
- ★ ***RUGGED*** as the Rock of Gibraltar. It will take the meanest abuse.
- ★ ***PORTABLE*** because it folds flat as a pancake. 1½" thick by 38¾" high by 28¾" wide.
- ★ ***INSTANTANEOUS.*** You can unfold it and set it up in 5 seconds flat unless you are all thumbs.
- ★ ***WRITING PAD*** feature eliminates need for messy blackboard.
- ★ ***CHART HOLDERS*** of improved design. Will accommodate many charts at several heights, even if they are as big as the side of a barn.
- ★ ***TABLE MODEL AND FLOOR MODEL*** combined in one. It's really tricky.
- ★ ***HANDSOME.*** Modern in appearance, satin aluminum finish. As sleek as a greyhound.
- ★ ***PRACTICAL.*** Rube Goldberg had no part in its design.
- ★ ***INDISPENSABLE*** because a good easel is necessary for conducting many types of conferences and meetings.
- ★ ***TIME SAVER*** because it puts an end to improvisation.

For full details write—

Antiaircraft
JOURNAL

631 Pennsylvania Avenue, N.W. WASHINGTON 4, D. C.