May 21 1925

COAST ARTILLERY JOURNAL

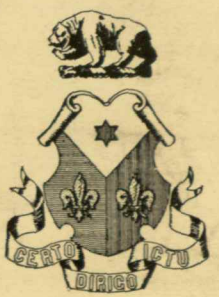

SIXTH COAST ARTILLERY
(HARBOR DEFENSE)

November

1926

17th Annual

Prize Essay Competition

PRIZES

First Prize	$125.00
Second Prize	$ 75.00

CONDITIONS

(*a*) Subject to be chosen by competitor, discussing some phase of policy, tactics, or technique involved in the efficient accomplishment of the mission of Coast Artillery.

(*b*) Competition will be open to all readers of the JOURNAL.

(*c*) Award will be made by a committee of award, consisting of three persons, to be nominated by the Editor. If no essay submitted seems to the committee worthy of a prize, none will be awarded. Honorable mention may be made of any essay submitted which seems to the committee worthy thereof, but to which a prize is not awarded.

(*d*) All essays entered in the competition will become the property of the COAST ARTILLERY JOURNAL. These will be published, if valuable and interesting to JOURNAL readers.

(*e*) Copy must be typewritten, with lines double spaced, on one side of the paper only, and must be submitted in triplicate. If illustrations are included, one of the three copies thereof must be in the form of drawings, tracings, or photographs (not blueprints nor brown-prints).

(*f*) Copy must contain nothing to indicate its authorship, must be signed with a *nom de plume*, and must be accompanied by a sealed envelope containing this *nom de plume* and the name of the writer. This envelope will remain in the hands of the Editor of the JOURNAL and, after award has been made by the Committee, will be opened in the presence of the Executive Officer, Third Coast Artillery District.

(*g*) Copy must be received on, or before December 31, 1926. It must be addressed COAST ARTILLERY JOURNAL and the envelopes must bear the notation, "Essay Competition."

RADIOLAS—
RCA LOUDSPEAKERS
and RCA ACCESSORIES

WE are glad to announce that we have been selected by the Radio Corporation of America to sell and service RADIOLAS, RCA LOUDSPEAKERS, and RCA ACCESSORIES

Radiolas . . . . . $15 to $575
RCA Loudspeakers . . . . . $18 to $245

Convenient Time payment may be arranged

EVERYTHING IN RADIO

THE BOOKSHOP :: *Fort Monroe, Virginia*

Bridge by Radio

Every Tuesday, 10 P. M., E. T.,
from
WEAF, WSAI, KSD, WCAE, WCCO, WEAR, WEEI, WFI, WGN, WGR, WJAR, WOC, WRC, WTAG, WWJ.

See newspapers for broadcasting time of following stations

KPRC, WFAA, WSMB, WOAW, WDAF, WSOE, KGW, KGO, WSB, WMC, KOA, KHJ, KFOA, WDBO, WDAE, CHXC, SKNC.

Free! Hands to be held in future games and complete report of each game as broadcast. Address

THE U. S. PLAYING CARD COMPANY
CINCINNATI, OHIO, U. S. A.

Newport News Furniture Co. Inc.

3400 — 3402 WASHINGTON AVENUE

HAPPY HOME FURNISHERS

DIETRICH'S PLACE *at Newport News*

Will be always the Leading Restaurant of the Peninsula

DOWN SOUTH COOKERY — A PLACE BECOMING TO PERSONS OF CULTURE

MANUFACTURED BY

BARTON MANUFACTURING COMPANY

ST. LOUIS, MO.

IS YOUR PAY INSURED?

HAVE YOU AN AUTOMOBILE?

A short time ago a lieutenant of the army struck a pedestrian and broke his arm. Suit was immediately filed.

As the lieutenant was a member of this association and carried our public liability insurance, we paid the loss. The affair cost the Association about $2000.00.

If you are not protected for **public liability,** write to us.

This is the most dangerous of all risks. We protect you against it at a cost that is surprisingly low. If you injure someone we relieve you of all worry, trouble, loss of time and expense with association attorneys and association money.

Don't neglect this important matter.

Examine your policy or, if you haven't one, write us, giving description of your car, for rates.

Service to the Services

UNITED SERVICES AUTOMOBILE ASSOCIATION

Fort Sam Houston, Texas

NEW YORK — CHICAGO — PARIS

Brentano's Inc.

Any Book in Print

BOOKSELLERS, ENGRAVERS AND STATIONERS

F and 12th Streets — Telephone Main 861 — Washington, D. C.

THE PURITAN CONFECTIONERY 31 East Queen Street HAMPTON, VIRGINIA

PURE HOME MADE CANDIES AND ICE CREAM

Home Made After-Dinner Mints, Salted Almonds, and Whipping Cream a Specialty PHONE 856

I. LIPMAN & COMPANY 33rd St. and Virginia Ave. NEWPORT NEWS, VA.

ARMY AND NAVY SURPLUS EQUIPMENT

PLUMBING AND MARINE HARDWARE AT REDUCED PRICES

I SELL LIFE INSURANCE

Due to low first cost and elimination of interest charges, mine is the cheapest obtainable contract carrying disability income and double benefit for accident.

An educational contract will pay your boy (or girl) $100 a month for four years whether you are alive or dead when he (or she) reaches college age.

If you need something similar to your war time insurance (but payable in a lump sum), I can give you a five year term policy with disability and additional benefits at the following rates per month per thousand:

Age 25	$ .89	Age 35	$1.01
Age 45	1.46	Age 55	2.38

LAWRENCE C. CRAWFORD

MAJOR, U. S. A., *Retired*

601 Woodward Building WASHINGTON, D. C.

BROADWAY DEPARTMENT STORE NEWPORT NEWS. VA. 3007-09 Washington Ave.

DRY GOODS, NOTIONS, MEN'S FURNISHINGS

HOUSE FURNISHINGS

EXCLUSIVE READY-TO-WEAR AGENTS FOR McCALL'S PATTERNS

PHONE 736

BLOXOM BROTHERS

WHOLESALE FRUITS AND PRODUCE

23 MELLEN STREET PHOEBUS, VIRGINIA

L. M. NEWCOMB
President

G. K. VANDERSLICE
Vice-President

THE OLD POINT NATIONAL BANK

PHOEBUS, VIRGINIA

Foreign Exchange

Travelers Checks

YOUR NEAREST NATIONAL BANK
and
U.S. GOVERNMENT DEPOSITARY

WE CAN HANDLE YOUR ACCOUNT
SATISFACTORILY TO YOU

Safe Deposit Boxes

Four Per Cent Paid on Savings

Call on us for anything in regard to Banking

P. McK. JOHNSON, *Cashier*

Depositary of the U. S. Government

THE FIRST NATIONAL BANK

OF HAMPTON, VIRGINIA

Capital	$ 50,000.00
Surplus and Profits (earned) over	100,000.00
Total Resources over	1,900,000.00

CONSERVATIVE

STRONG

ACCOMMODATING

H. H. KIMBERLY, *President*
R. C. WINNE, *Cashier*

P. J. DRUMMOND, *Assistant Cashier*
J. C. ROBINSON, *Vice-President*

4% INTEREST ON SAVINGS ACCOUNTS

R. O. T. C. Mortar Practice

THE COAST ARTILLERY JOURNAL

Volume 65 NOVEMBER, 1926 Number 5

General Principles of Military Pedagogy

By LIEUTENANT COLONEL W. H. WILSON, C. A. C.

INTRODUCTION

UNDER the National Defense Act all officers of the three components of the Army of the United States are instructors in the army school system. They instruct officers and soldiers of their own arm and of the National Guard, officers and prospective officers of the Reserve and of the Training Corps, and members of the C. M. T. C. No matter how highly trained an officer may be, unless he can impart his knowledge to others and guide and direct their training his general efficiency is much impaired. The successful operation of the Act depends, first, upon the uniformity of instruction, and second, upon cooperation and teamwork on the part of all instructors. Most instructors teach exactly as they were taught. They derive their ideas of teaching methods from their own experiences in schools and colleges where the courses are seldom of a very applicatory nature. The transition from the methods of instruction used in our colleges to the applicatory system prescribed for the army requires a special effort. In view of this fact it is believed essential that the students in the army be given at least the essential principles of pedagogy.

The following limited definitions apply to the matter in hand:

a. Psychology.—The scientific study of the mental processes of human beings.

b. Education.—The production of useful changes in human beings comprising changes in knowledge, in ideals, and in skill.

c. Pedagogy.—The theory of education and the application of that theory to secure the best results in instruction and training.

By analyzing the psychology of education, the theory of education may be formulated; that is, by knowing *with what, by what,* and *how* the human being learns, methods may be developed for facilitating the processes and later applied. The "with what" is the individual's native equipment, inherited and acquired. The "by what" is experience, actual

or hypothetical. The "how" is meditation and consideration, conscious or unconscious, of cause and effect. Consideration of the foregoing separates our study into three general divisions:

a. The native equipment of the human being,
b. The psychology of learning, and
c. Pedagogy.

The Native Equipment of the Human Being

By native equipment of the human being is meant the stock of inherited or acquired responses and abilities. They may be divided into three types, namely, reflexes, instincts, and capacities. The types merge one into another and the distinctions between them are primarily of definiteness and complexity rather than differences. An example of an instinctive response is the closing of the eyes on the sudden approach of an object; another is the instinct to get food when hungry. These are inherited responses and are done without prior experience and training. They need not be learned. Reflexes are simpler forms of reaction usually involving a limited set of muscles and occurring in response to precise stimuli.

Capacities are distinguished from reflexes and instincts in being general mental abilities rather than specific motor responses, and in referring primarily to the native mental equipment such as the powers of sensation, perception, retention, attention, imagination, and all the varied complex psychic processes. It will be recognized immediately that, especially under the third type—capacities, the differences between individuals are quantitative rather than qualitative. These differences may be very great. Measurements or tests of considerable numbers of persons have been made, with results showing that the best individuals could do from twice to twenty-five times the work of the poorest of the group or could do the same work from twice to twenty-five times as well.

The investigation of this problem in recent years has brought out the fact that the differences among human beings are very much greater than had been commonly thought. The conspicuous feature about the nature of the distribution of mental abilities is the general shape of the distribution curve. This indicates that the large majority of individuals cluster about the center, with approximately equal numbers of superior abilities on the one side and inferior on the other side of the middle. If we designate the middle section as the middle group, the one at the right as the upper group, and the one at the left as the lower group, we find that approximately 66% of all persons fall into the middle third, 17% into the upper one-third, and 17% into the lower one-third of the range of capacities. In other words, this distribution

curve closely resembles that of the probability curve, and this resemblance is exceedingly useful, when intelligently employed, in all school measurements.

The Psychology of Learning

The psychology of learning is the study of the processes by which a human being, with his native equipment, inherited or acquired, learns or acquires knowledge or skill. Probably all forms of learning can be reduced to one relatively simple schematic type. Reception of impressions through the senses; assimilation, analysis, and combination of processes in the mind; and redirection of impulses to produce a reaction; in brief, stimulus, association, response. Discrimination and decision are involved. Discrimination sets aside the associations inappropriate to the problem, and decision selects subtraction as the principle involved and applies it to get the required answer.

All learning, even including reasoning, is probably of the same fundamental type, and may be described in the same general schematic manner. Facts are read in a book, heard announced by the teacher, or observed. These sensory impressions are associated, separated, and combined in various ways, and in the course of time usually lead to some reaction either of speech or of some larger muscular activity.

Association is the basis of the process, but there is also dissociation or the separation from one another of the various characteristics which make up the complex. These, together, are usually spoken of as learning by analysis and abstraction. When complete, the process of analysis and abstraction makes possible the reaction to parts of situations rather than to wholes and is clearly an enormous advantage over simple associative learning. One association properly attached to the significant part of the situation may function without any further effort in a great variety of similar but otherwise entirely novel situations. This is probably the essence of reasoning and its realization and application are a great part of education.

All reasoning may be classed as inductive or deductive. These frequently encountered but often hazily accepted terms should be understood in order that student or instructor may know by what road he is advancing. Induction is reasoning from the particular to the general. From the fact that the sun rose this morning we may reason inductively that the sun rises every morning. Deduction is reasoning from the general to the particular. Accepting the laws of gravitation, we deduce that water will not run up hill.

In the last analysis all knowledge is inductively acquired since we have no contact with our surroundings other than through our five

senses, but the value of deduction has been pointed out, for the method of analysis and abstraction consists essentially of deducing the appropriate reaction from a generality after having analyzed the generality out of the specific case.

The rate and progress of learning may be expressed in terms of the amount of work done per unit of time or in terms of time required per unit of work. Usually time is chosen as the abscissa and the amount accomplished as the ordinate. The resulting graph is the curve of learning. Such curves seem to have in common two general characteristics: first, an initial period of rapid progress, and second, successive periods of little or no progress, called plateaus, each followed by a period of rapid progress. The early period of rapid progress may be due to:

a. The fact that the first elements of a new set of materials or a new set of associations may be picked up rather easily and quickly because of their relative simplicity;

b. The probability that the first stage of practice in a new type of learning makes available various elements or activities already in the possession of the learner;

c. The initial zeal in commencing a new task;

d. The large opportunity for progress at the beginning.

Plateaus in the curve may be due to lagging in energy, to loss of attention, interest, and effort, to fatigue, to periods of mechanization, etc. Later rapid progress may be due to recuperation of physical energy, attention, interest, or effort, to the acquisition of new methods of learning or of doing the task concerned, or to better use of the associative bonds made automatic by the preceding study or practice.

As the plateaus are usually not desirable, effort should be made to eliminate them:

a. By removing and preventing the conditions which bring them about, and

b. By providing additional stimuli at the points at which they occur. Occasionally, however, the plateau indicates only an apparent lack of progress, the real progress being internal, so to speak, and consisting of a development of automatization of associations and responses. In these cases the plateaus are followed by rapid rises to the curve.

Many memory studies have been made, usually to compare the amount of new material acquired by a certain number of repetitions distributed over varying periods of time, regularly and irregularly. Results vary greatly in detail but indicate, generally, that more material is acquired by distributing the given time for study over at least three periods, and that these periods may well be of gradually diminishing length. In a test carried out by Starch it was found that ten minutes

twice a day for six days gave the greatest progress; twenty minutes once a day for six days gave nearly as much; forty minutes once a day for three days gave considerably less progress; and one hundred and twenty minutes at one time produce scarcely half as much progress as the ten or twenty-minute periods.

The rate of forgetting has been measured by ascertaining the time required to relearn material at different intervals after the original memorizing. The curves of forgetting show a very rapid decline at first followed by a more gradual decline later. Ebbinghams found that he forgot as much in the first twenty minutes as in the following thirty days. Others forgot as much in the first two days as in the next twenty-five days. The experimental work in forgetting is too limited, as yet, to permit of much definite application in practical procedure. The one suggestion that might possibly be made would be that since the rate of forgetting is very rapid at first and more gradual later on it would probably be advantageous to have relearning of material come frequently at first and more rarely later on.

In general, concentration, effort, and zeal are required and must be maintained if the learner is to make consistent progress. Specific practice in the functions to be improved has yielded striking amounts of improvement. Definite knowledge of success inspires pride and satisfaction in accomplishment. Definite knowledge of errors made inspires the determination not to make the same ones and again thereby results in improvement.

As a result of the different factors just discussed the following rules for study may be laid down:

1. Keep in good physical condition.
2. Attend to, remove, or treat physical defects that often handicap mental activity, such as defective eyesight, defective hearing, defective teeth, adenoids, obstructed breathing.
3. See that external conditions of work (light, temperature, humidity, clothing, chair, desk, etc.) are favorable to study.
4. Form a place-study habit.
5. Form a time-study habit.
6. When possible, prepare the advance assignment in a given subject directly after the day's recitation in it.
7. Begin work promptly.
8. Take on the attitude of attention.
9. Work intensely while working; concentrate.
10. But do not let intense application become fluster or worry.
11. Work with the intent to learn and to remember.
12. Seek a motive or, better, several motives.
13. Get rid of the idea that you are working for the teacher.

14. Do not apply for help until you have to.
15. Have a clear notion of the aim.
16. Before beginning the advance work, review rapidly the previous lesson.
17. Make a rapid preliminary survey of the assigned material.
18. Find out by trial whether you succeed better by beginning with the hardest or with the easiest task when confronted with several tasks of unequal difficulty.
19. In general, use in your studying the form of activity that will later be demanded when the material is used.
20. Give most time and attention to the weak points in your knowledge or technique.
21. Carry the learning of all important items beyond the point necessary for immediate recall.
22. Pass daily judgment as to the relative degree of importance of items that are brought before you, and lay special stress on the permanent fixing of those items that are vital and fundamental.
23. When a given bit of information is clearly of subordinate importance and useful only for the time being, you are warranted in giving to it only sufficient attention to hold it over the time in question.
24. Make the duration of your periods of study long enough to utilize "warming up" but not so long as to suffer weariness or fatigue.
25. When drill or repetition is necessary, distribute over more than one period the time given to a specified learning.
26. When you interrupt work, not only stop at a natural break, but also leave a cue for its quick resumption.
27. After intensive application, especially to new material, pause for a time and let your mind be fallow before taking up anything else.
28. Use various devices to compel yourself to think over your work.
29. Form the habit of working out your own concrete examples of all general rules and principles.
30. Form the habit of mentally reviewing every paragraph as soon as you have read it.
31. Do not hesitate to mark up your own books to make the essential ideas stand out visibly.
32. Whenever your desire is to master material that is at all extensive and complex, make an outline. If you also wish to retain this material, commit the outline to memory.
33. In all work apply your knowledge as much as possible and as soon as possible.

34. Do not hesitate to commit to memory verbatim such materials as definitions of technical terms, formulas, dates, and outlines, always provided, of course, that you also understand them.
35. When the material to be memorized presents no obvious rational associations, it is perfectly legitimate to invent some artificial scheme for learning and recalling it.

Pedagogy

One of the most common errors of the untrained instructor is to imagine that telling is teaching. Telling, in some form, is a necessary part of instruction, but the student must use the information he has been given before he has really learned anything. He must either apply it in thought or he must do something with it. Neither is the ability of the student to tell the instructor about something very good evidence that he understands the thing or can do it. He may simply be using his memory without any real knowledge of the subject. The untrained instructor often asks the student whether he understands, and accepts the student's answer of "Yes" as evidence that he has put the instruction over. Frequently the student answers "Yes" under such circumstances because he wants to appear well in the eyes of his fellow students or of the instructor. He may have missed the point of the lesson entirely. Also, the measure of effectiveness of teaching is not merely that at the end of the teaching period the student has grasped the new ideas or is able to do the new piece of work. Perhaps these results may be accomplished with much less expenditure of time and effort on the part of both instructor and student.

The good instructor must be able to analyze his subject and decide what the student must know and be able to do to be regarded as proficient; he must be able to break up his subject into proper teaching units and to arrange these units so that the mastery of one makes easier the mastery of those to follow; he must be able to plan each day's work so as to avoid lost motion, to conduct the class so as to avoid confusion, to keep up the interest, and to put over the instruction rapidly and effectively; and he must be able to measure the results of his work.

As a preliminary to building up a course in any subject the answers to the following questions should be obtained:

a. What are the training objectives of the students who are to take the course?

b. What is the average capacity of these students and how much previous training along similar lines have they had?

c. What analysis of the subject matter has already been made by other similar schools?

d. What is the common opinion of other instructors who have taught similar subjects as to the objective and the analysis into teaching units?

Having this information available, the first thing to do is to list all of the things which the student must be taught in order to have a complete knowledge of the subject, or as complete a knowledge as the objective of the course calls for. These things should be listed as "know" and "do" things, and should be arranged in what is believed to be the best and most logical sequence. The best order for teaching units can only be determined by actual trial. Preparation of a course of instruction cannot be begun and completed at a desk—the course must be tried out on a class before it leaves the experimental stage; it never leaves the improvement stage.

In doing this work the instructor must, of course, use his own knowledge of the subject, but he should get as much help as possible from others who have a thorough knowledge of it, since one man will seldom list all of the essentials no matter how good he himself may be. Too much dependence is apt to be placed on books. We resort to books so frequently that "it is written" has come to mean "it is true." To plan a course by dividing the number of pages in a text by the number of lesson periods, assigning the resulting number of pages as a lesson, is hopelessly wrong but frequently done.

There are four principal steps in the teaching operation when the applicatory method is employed. They may be called linking-up, presentation, application, and testing. These steps are always carried out in the order stated. The instructor must control and direct the instruction process but must not do the students' work. The instruction will be efficient in proportion as the students do the work and the thinking for themselves. What the student gains will be by virtue of his own activity. The most important thing that you can teach your pupils is to get along without you.

By linking-up is meant the process of tying in the new material with something the student already knows. It is accomplished by guiding the mind of the student to certain "contact points" which form a suitable starting point for the new material. One way of accomplishing this is by a review of the preceding lesson, usually by the skillful use of questions. If the work of linking up is properly carried out the student will have in his mind, at the beginning of the presentation, certain ideas or pictures which the instructor, in planning the lesson, has decided will serve satisfactorily as a basis for teaching the new ideas.

The use of analogies furnishes another example of linking-up. The use of analogies is of especial benefit when the instruction is to cover something difficult to demonstrate practically, as it enables the student

to visualize abstract conceptions—for example, the behavior of a projectile in flight or the flow of an electric current.

The next step is the presentation of the new material. It is necessary that a method of presentation suitable to the subject matter of the lesson be selected. There are three principal methods in use. The student may actually be shown how to do a given piece of work, such as the determination of firing data for a battery. The work is done with the same implements as will later be used in practice. We may call this the method of demonstration and in most cases it is the most effective one.

The method of demonstration is often of great auxiliary value—

a. In maintaining the attention and interest of a class.

b. In making evident a practical application of an abstract principle. Nothing so clearly fixes in the mind a new principle as does a demonstration of how it can be applied. If the particular application selected can be shown to be of immediate or future value to the student, its effect is correspondingly increased. If the demonstration itself can be made spectacular, or is so arranged as to introduce an element of surprise to the class, its effect will be the greatest.

c. When practical application by the student is to follow the presentation and a difficult or complicated series of operations is involved, the student's attention is likely to become focussed on non-essentials. In order to allow him to observe the phenomena and to receive and digest the instructor's comments thereon before undertaking the operation himself, a preliminary demonstration is often helpful.

When the method of demonstration cannot be employed satisfactorily, a substitute, called the method of illustration, may be used. This consists, essentially, in putting before the students, not the actual things with which the instruction deals, but things which resemble them sufficiently to serve the purpose. Thus, in teaching the principles of gunnery, "blackboard firing" may take the place of an actual expenditure of ammunition. It must always be borne in mind that only in proportion as students have come in contact with the real thing can they look at the illustrations and think of the thing itself. Many instructors fail when using diagrams because the student has not had sufficient experience with the real thing to understand the drawing. The greatest danger in the use of this method lies in the fact that it is easier for the instructor than the demonstration method and he tends to use it when with a little more trouble the latter might be employed.

The third is the lecture method. It consists in the instructor merely passing out the information, and as a rule it is less effective than either of the other two. In using the lecture method the instructor should interrupt his talk with questions and for discussions, and should en-

courage his students to interrupt him, as in this way he can assure himself that contact has not been lost. The lecture method entails great thoroughness of preparation on the part of the instructor and is apt to lead to laxity on the part of the students. It should not be employed when either of the other methods can be applied, and whenever possible should be reinforced by demonstrations.

Another method, which is practically a form of the one just discussed may be called the topical method. In it topics are assigned to students for discussion; in other words, the students prepare and deliver the lecture. Certainly the student delivering the lecture learns a great deal about his subject by this method, but the rest of the class does not pay the same attention to a classmate that they would to their regular instructor and so get less out of it.

A frequent mistake on the part of the instructor during this step is in not sticking to the subject matter as previously determined. Somewhere in the course of the presentation possibly a question by a student brings up some related matter—a very interesting one perhaps—and the instructor wanders away from his subject. This is to be guarded against.

Effective linking-up and presentation require careful planning. Plan the management of the class beforehand. Consider two factors in regard to the lesson: subject matter and manner of presentation. Determine the major and minor topics of the subject matter and assign to each a certain period of the recitation or conference period. Meditate on how you can arouse the interest of that particular class in that particular subject. Prepare your plans for linking-up, either by means of a brief review of what was covered in the preceding lesson or of some other suitable material from which to start. Reserve a few minutes at the end of the period in which to announce the next lesson, pointing out its major topics. Write out an outline of your lesson. Such a written plan will guide you in class. Kept for reference it will save you trouble when you take another class over the course, but revise the plan in the light of experience whenever it is used. Improvement comes through intense, earnest effort and the elimination of mistakes. Follow faithfully your time arrangement of the lesson; so many minutes for this topic, so many for that. Instead of cramping you, this time schedule will liberate you. It will avoid that frenzied rush, toward the close of the period, to catch up for dawdling over nonessentials. Keep your plan with its time schedules, topics, and questions—and a watch—always in view.

After the presentation of the lesson has been mapped out, consider the number of points to which demonstrations are applicable. The lower the degree of intelligence, the more limited the imagination,

and the less the curiosity of the class concerning the subject in hand, the greater will be the value of demonstrations. In any case, they serve to illustrate and bring home to the less keen and less imaginative learners principles which if presented wholly in the abstract would fail to register. In some instances, where the opportunities for application are limited, a demonstration may be employed to replace application by the students themselves.

When a new subject is begun, it is often well not to assign a book lesson for the first period, but to discuss with the class, in a cordial and informal way, the general situation and purpose of the course and then read and study with them the first lesson, explaining and making clear the new terms and ideas which would otherwise be so meaningless to the student without previous experience in that subject.

At the close of the presentation there is little evidence that the student has thoroughly grasped the subject. In fact it may safely be assumed that he has not. There will be certain weak spots where the teaching will not have been effective. The student must be trained to apply what he has learned and it must be made clear to him just how well he has grasped the principles of what he has been taught. This is done by means of the third step—application. In the presentation step the student is passive. He listens, observes, and absorbs the instruction. During application he becomes the active agent, exercising his mind and muscles in the practical use of the principles he has observed. The student is given a problem to solve or work to do, involving the things he is supposed to have learned. The instructor watches and corrects the work of the student, for if he is permitted to work unsupervised errors of thought and action may creep in, and gives him additional instruction on any points on which he is not entirely clear.

When the situation admits, the application should reproduce as nearly as possible the circumstances under which the principles taught are intended to be applied. Thus, in training troops to advance from cover to cover, the instruction should not be held on a level parade ground; in training officers to use particular instruments, their surroundings should reproduce as nearly as possible the surroundings under which they are to apply these methods, and the instruments should be those which they may reasonably expect to encounter in service.

Another, though less satisfactory way, of accomplishing the desired results is by means of oral questions or discussion. This method occupies a large place in the work of the public schools and colleges, where what is taught is largely of an informational character. It is easier for the instructor and so is usually adopted by the lazy man. One trouble with it is that inability to express is liable to become confused with inability to do and the glib talker is at a premium. Many

men can discuss learnedly subjects about which they have a very meager practical knowledge. However, while this method is unsatisfactory if used alone, in combination with the method discussed above it is excellent.

Good oral questioning is extremely important in teaching. Questions center the attention on the point under discussion. They capture the attention when it has a tendency to wander. Ask the question first, then wait a short time before calling upon an individual for an answer. This allows time for reflection and does not relieve the remainder of the class of the necessity to think also. Avoid calling upon the students in regular order but be sure that none are slighted. The student should not be interrupted in answering except to correct an error so grave that it needs the interruption to emphasize the correction. Occasionally have some other student point out errors in the answer given. Do not help the student in reciting. Questions which suggest the answers are useless. Insist on accurate answers, expressed in good English and complete without being rambling. Discourage sloppy work. Care should be taken not to allow questions to become irritating or to cause resentment. The instructor is not there to humiliate the class by showing them how little they know but to make them think and learn. Questions should be clear. They should be couched in terms with which the student is familiar. They should not be asked in a rambling fashion, to use up the time, but should move toward a definite objective.

Questions asked by the student are of three general types. First, there are the foolish questions, intended to divert the instructor, or such as are asked by the ingratiating or self-advertising student. If the instructor is sure a question is of this type he should show it up for what it is, but great care must be taken to avoid discouraging the really serious men from asking questions. Next there are questions which are either too easy or too hard to be of interest to the balance of the class, which may be called unnecessary questions. The answer to these should be deferred until after the lesson hour. Third, come the worthwhile questions. They indicate the points which have not been covered satisfactorily by the instructor. They should be answered at once for the benefit of the whole class and a record of them made in order that it may not be necessary for the next class to ask them at all.

The fourth step is testing. The instructor, believing that he has fully presented the subject and that the students have grasped its essentials, should proceed to inspect the results of his work. Testing differs from oral questioning in that the instructor gives the student no assistance.

Where there is keen competition of honors, testing may be so directed as to determine the relative standing of the several members of the

class. Tests are frequently employed to determine how many of the students will be classified as proficient in a subject. In addition to these uses, testing should also be employed to indicate to the instructor which students require additional assistance, when the majority of the class have mastered the subject, and what portions of the work require additional attention before the class proceeds to the next subject. Testing should also be so directed as to aid the students in linking up related ideas which have been treated at different times, thus serving as a review of certain portions of the work. Tests are of value to the student in indicating to him the completeness of his grasp of the subject.

It is desirable that tests for all other purposes than record be held at frequent intervals, and well distributed throughout the course. For their results to be of value, they must be so drawn that they reveal an accurate cross-section of the class knowledge of the subject. This demands that the test be comprehensive but brief—conflicting considerations which must be reconciled by the faculty on the ground. So long as the marks on such tests are not made a matter of record, the usual class can be made to regard such tests as a game, and a healthy spirit of competition is developed.

Tests for record purposes should not be held until the slower members of the class have had time to digest the instruction received. Intermediate record tests, "progress tests" or "partial examination" may be held to cover related phases of the work before taking up work of a somewhat different character, followed by "proficiency tests" or "final examinations" at the end, covering the subject as a whole.

A test should be of sufficient length to enable a student of average ability to complete it before he becomes tired; longer tests are inadvisable and frequently defeat the purpose for which they are held.

The form of the test should receive careful consideration and should be adapted to the character of the subject taught and the purpose for which the test is held. There are four general types of test recognized today:

a. The Free Answer Type.
b. The Practical Type.
c. The Essay Type.
d. The New Type.

The Free Answer type is the familiar written (or oral) examination. Its advantages are that the student is given an opportunity to answer at length and in his own words; it permits the student to reveal his line of reasoning from point to point; it affords an almost unlimited field in the choice of questions; and it permits computations to be checked for method. Its disadvantages are that it is a time-consumer; it is exceedingly difficult to grade the answers with any degree of uni-

formity; it requires a large portion of the instructor's time to read and grade the replies; it makes the maximum demand upon the student's nervous system; and it affords the verbose student an opportunity to write much and say little while it handicaps, and at times penalizes, the deliberate thinker.

Tests of the Free Answer Type are applicable to a great variety of subjects. They are especially adapted for tests of progress of proficiency, where the results are to be made a matter of record; tests where the accuracy of results is more important than the amount of time required for the conduct of the test; subjects where the reasoning processes of the students must be checked; and subjects of a moderately exact character, where the Essay type test is not required yet a sufficient diversity of satisfactory answers exists so that the New Type test is not applicable.

The Practical type test is too well known to require discussion. If the classes are not too large, practical solutions to determine the *skill* of the student can be required, as in Drawing, Military Sketching, and similar subjects. This type may be used to determine progress or proficiency, or both. To cover such subjects completely, a combination of this with a test of one or more other forms may be necessary.

The Essay type, so-called for lack of a better name and to distinguish it from the others, consists of the solution of problems which are based upon general and special situations calling for the correct application of accepted principles such as the solution of map problems, map maneuvers, or terrain exercises. They may be written or oral, and are usually held to determine proficiency. This type of test is necessary whenever the character of the work is such as to demand that the student be allowed the maximum latitude in his solution.

The New Type tests are not yet generally accepted by all educators, but the student should know what they are and wherein they may be used. Specifically, the New Type tests consist of "completion questions," "single-word" questions, "recognition questions," "true-false questions," "observation questions," and "performance questions." Their preparation and use are described in *Measurements in Higher Education*, by Ben D. Wood, and *Preparation and Use of New Type Examinations*, by Donald G. Patterson, and in Ruch's *Improvement of the Written Examination*. In these tests, the student is required to indicate his answer in one word or phrase, or to select from several answers already prepared that one which he considers correct, or to confirm or deny a statement. In this manner, from two to five questions can be answered per minute; marking can be done by any clerk, regardless of his knowledge of the subject, at a rate of ten to twenty questions per minute; and the marking is purely objective.

The advantages claimed for the New Type test are that it can be given and scored quickly; that the marking is objective, equally fair to all, and can be done by a clerk, thus freeing the instructor for other more important work; and that it makes the minimum demand upon the student's nervous energy. The disadvantages are that the reasoning processes of the student are not shown; that computations are not shown and hence cannot be checked for method; and that the preparation of examinations (requiring repeated checking by many persons to detect all opportunities for misinterpretation or misunderstanding and to insure the deletion of every ambiguity) is a laborious process, requiring about as many instructor-hours as are needed for marking writen examinations of the Free Answer type.

It is at once evident that the New Type test should not be used in these subjects where more than one correct answer exists, or where it is desired that the student show his methods of computation or his reasoning from point to point. This form is useful, however, when it is desired to give short tests from time to time to bring out points overlooked, emphasize those it is especially desired to stress, or to correct possible confusion of ideas or lack of precision in thought. The results of such tests not being made a matter of record, the progress of the class may thus be determined with a minimum demand upon the time and nervous energy of its members. While the Free Answer type of test is often preferred for deliberate grading of students in time of peace, the New Type test may be necessitated by the large size of the classes and the fewness of instructors in time of war, especially in subjects of exact character in which examinations of this type have already been prepared and tested in peace-time instruction.

Normally, proficiency in a subject is best determined by tests of the Free Answer type, either alone or in combination with one or more of the other types, depending upon the subject and the purpose of the test. Regardless of the form used, it should always be remembered that the mission of all examinations is not only to test the knowledge or skill of the student, but also to help him connect up related facts and to impress the more important points upon his memory.

Actual knowledge cannot be accurately measured, and therefore it cannot be accurately marked. While it may be difficult to make any single measurement accurately, it is possible and practicable to reach a *reliable* result through the aid of approximate measurements, and this realibility increases with the number of such measurements made and the care exercised in making them.

The familiar percentage system, in which 100% is the maximum and 75% (or less) is passing, is still largely used today in one form or another. It is yet the only system by which relative class standing

can be readily determined. It is open to the objection that the passing mark is 75% of *what?* If marking is subjective, the problem is solved. But to have objective scoring, we must have definite values assigned to test questions, and only *one* answer to each question correct. Manifestly this is possible in only a few subjects.

In order to make allowances for differences in grading, where no two instructors will award exactly the same mark to the same paper, there has been developed what is termed the Wide-Step System, by which letters have been given to the five groups produced by the variations made in marking the same set of papers by several thousand teachers, as below:

Letter:	A	B	C	D	E
Approximate %:	100-96	95-86	85-76	75-71	70 or below

If we further modify this system by applying to it the theory of probabilities to obtain a more natural grouping of student ability, we secure the following:

Letter:	A	B	C	D	E
Approximate %:	100-99	98-92	91-77	76-70	69 or below

which more closely conforms to the natural grouping of the students. This system is usually satisfactory where relative class standing is not mandatory or desirable, and in the long run the following approximate distribution of marks should obtain.

Letter:	A	B	C	D	E
% of Class:	2%	23%	50%	23%	2%

Although this distribution serves as a guide for instructors in marking, and perhaps as a check in awarding marks, it must be applied with caution to small or especially selected groups of students.

It is the practice at the Coast Artillery School to divide the students in each class (or section) when each subject is completed into three groups—upper, middle and lower—the officers being arranged alphabetically in each group. The numbers in each the upper group and lower group seldom exceed 20% of the class or section concerned. Students who obtain an average of A and a few high B's are placed in the upper group; those whose average mark is D or E constitute the lower group; all others are placed in the middle group. This system is used for the information of the Faculty Board and is not intended for record purposes.

The grades used in marking are not used for efficiency report ratings. The approximate equivalents of the letter grades may be expressed as—

	Proficient			*Deficient*
A	B	C	D	E
Excellent	Very Good	Good	Fair	Poor

The determination of just what constitutes proficiency in a subject is a very difficult and somewhat elusive problem. The standards of the Coast Artillery School have been determined after years of observation of student classes, and "proficient" is held to mean that the faculty considers the student qualified and competent to undertake any military duty involving the proper application of the knowledge acquired by him at the school, all things considered.

No matter how hard an instructor may work he will not be successful unless his students want to learn. A big problem for the instructor to solve is how to arouse and sustain interest. He must make learning as easy as possible by working up a well-planned course and by directing the student's energy into the proper paths, and must endeavor, by all possible means, to create a liking for the work in hand. There are many factors which enter into this matter of interest. The student must be made to feel that the instructor is there to help him. He must not be discouraged or exposed to ridicule but must be made to understand that the instructor wants him to succeed. It is very essential that the student shall have confidence in the instructor's knowledge of his subject and in his ability to use his knowledge practically.

Interest may be aroused by making it clear to the student that the thing he is learning is going to be of use to him in his future endeavors. The instructor should not fail to point out the connection between the work in hand and what the student will be called upon to do later on in his career; it should be shown that the subject is of more than academic interest. To create a liking for any subject provides for successful activity in it. Successful activity is accomplished by agreeable feeling and *vice versa.* The student must be made to feel that he is learning. He must have confidence in his ability to learn. Curiosity is also quite a factor in maintaining interest. All of us like to find out what makes a thing go. Desire for approbation and fear of ridicule or punishment are powerful driving forces which should be used with great care since their tendency is to make the student try to please the instructor rather than to benefit himself. Good instruction is a large factor in arousing and maintaining interest. If the student feels that the course has been well worked up his interest increases. If he feels that a part of the work is more filling or that the course is a hit or miss affair or if he is fatigued by too long lessons, he becomes disgruntled and antagonistic and loses all the interest he had at the beginning.

The manner of the instructor is a large factor in maintaining interest. If he is brisk, businesslike, and sure of himself he will gain and hold the confidence of his class. If he is lazy, uncertain, hesitant, and talks without emphasis the class will soon be thinking of other things. Too much interference on the part of the instructor is often the cause of loss of interest. If the instructor is impatient and shows or corrects the student when he does not need it, he does harm. Probably nothing reduces interest more than "standing around." If the student must wait, while materials are gotten ready or because he does not know what to do, he will soon lose interest. If the instructor does not plan his work well, there will be much lost motion.

An instructor should never play favorites. This does not mean that more time should not be given to the backward man than to the bright one, but when this is done the reason should be so obvious that no one can complain.

In conclusion it may be said that an instructor should take advantage of every opportunity for the study of pedagogy. The way to improve is through effort in the form of study and experiment. Teaching is, in itself, an applicatory problem. We must study how it should be done, try out our ideas on a class, and study the results. Next time we shall be able to do it better and with less lost motion. "We do not teach unless someone learns!"

Our people, during the twelve years before the War of 1812, refused to make any preparations whatever. They saved a million or two of dollars by so doing; and in mere money paid a hundred-fold for each million thus saved during the three years of war which followed.—*President Roosevelt.*

Coast Artillery Target Practice in Hawaii

By Colonel W. E. Cole, C. A. C.

TARGET practices were held at Fort Kamehameha, during the year 1926, by the Fifteenth Coast Artillery (H.D.) with fixed armament; the Forty-First Coast Artillery (Ry), with railway mortars; and the Fifty-First Coast Artillery (Hv. T.), with 155-mm. G. P. F. Each battery of the Fifteenth Coast Artillery (H. D.) fired a day practice and a night practice, while one battery fired a special long-range practice. In the Forty-First Coast Artillery (Ry), each battery fired a day practice and a night practice at Fort Kamehameha and a day practice in the field at Gilbert, T. H.

Each battery of the first battalion of the Fifty-Fifth Coast Artillery (Hv.T.) fired two day practices, a night practice, and a special long-range practice at Fort Kamehameha, and a day practice in the field at Gilbert, T. H. The second battalion moved from its permanent station at Fort Ruger to Fort Kamehameha where each battery fired a day practice and a night practice. In addition to this one battery fired a special long-range practice, one battery a practice under gas, and one battery a short-range practice with emergency fire control system. This battalion then moved to Haleiwa, on the north shore of Oahu, for target practice in the field.

Our objective for the training year is given very well in paragraph 15, Training Regulations 10-5. It was decided to be so trained that the Coast Artillery here could fulfill the mission given in that Training Regulation. Section 10, Training Regulations 435-220, served as a guide in the training of the batteries. Of the subjects mentioned in Training Regulations 435-280, all were well covered by each battery in the command. In the school for officers the study of Training Regulations 435-55 and 435-280 was stressed.

The applicatory method of instruction was emphasized at all times. In general, the training of the command followed the usual Coast Artillery methods, except possibly for a greater use of the training regulations than is usual. The drills were analyzed a great deal and men who could not fulfill the positions without errors were changed. I am convinced that the analysis of drill is one of the most important functions that a field officer is required to check, or rather that he must insist shall be carefully checked.

The annual turnover in personnel is so great that each battery commander is faced with the necessity of rebuilding his organization

each year. Since good coast artillery firing is almost wholly dependent upon teamwork, successful artillery training is necessarily an annual cycle commencing with gunners' instruction, progressing to an intensive period of outdoor drill and sub-caliber practice, and culminating in service practice. It is desirable that the peak of efficiency reached in service practice be maintained the year around. We try our best to do this by holding artillery drill throughout the year, but I cannot say that we succeed. The artillery team must be re-organized, at least once annually, on the basis of the men who will probably be present for the next service practice, and training begun anew, almost from the ground up.

The intensive outdoor period this year was during the months of April and May. On the whole, conditions were favorable for good training. The weather man was uniformly good; and a boat was available for tracking or target towing nearly every day.

The harbor defense command post, group command post, radio stations, meteorological station, and all communication agencies functioned regularly as part of the daily training.

Night drills were held once a week. Searchlight operators were well trained, and illumination of targets was uniformly good at ranges up to 11,000 yards. Meteorological data for night firings were obtained by tracking the pilot balloons with a 36-inch mobile searchlight (Mack unit). The night practices were entirely successful; the units functioned just as smoothly as by daylight, and the results compare favorably with any of the day practices.

In the Fifteenth Coast Artillery training was conducted along the usual lines. A portion of each drill was analyzed. Many sub-caliber practices were held by all three batteries, and each officer of the batteries assigned to the primary armament fired the 12-round instruction practice with 6-inch ammunition authorized by Army Regulation 775-15. These practices, as well as the sub-caliber practices, were thoroughly analyzed, and were of much value, not only to the officers who conducted them, but also to the personnel manning the battery used for these firings. Each battery fired one day and one night practice, of which the day practice was a part of the "battle practice," in which all units regularly stationed at Fort Kamehameha participated.

In the Forty-First Coast Artillery, training included drill and analysis of drill, sub-caliber practice, and, for officers of the firing batteries, the firing by each of twelve rounds of 6-inch ammunition, as authorized by Army Regulations 775-15, for instruction in fire adjustment. Sub-caliber practices were not entirely successful, owing to the great difficulty experienced in observing splashes. The hydrography here is such that the sub-caliber targets must be towed just outside the

reef, where the water is almost invariably choppy, so that the tiny splashes of the mortar sub-caliber are usually indistinguishable. It was only after repeated attempts, and with the most favorable conditions of the sea, that we finally succeeded in getting off a satisfactory sub-caliber practice for each battery. Each battery fired a day practice and a night practice at Kamehameha, and a day practice in the field at Gilbert, on the southwest corner of Oahu.

The firing spur at Gilbert is ballasted with coral (the general practice of the railroads here), and the outrigger floats were dug into the coral and backed with the same material. Coral does very well for the local narrow-gauge roads, with their light rolling stock, but is not heavy nor compact enough for ballasting a firing position. The officers of the regiment believe that large armament errors are developed at Gilbert because of lack of stability in the foundation of the firing spur. The organization of the position, including the emplacement of the mortars, installation of communications over difficult terrain, and the construction of a temporary battery commander's tower, was excellent training for the personnel of the regiment.

In the 1st Battalion, Fifty-Fifth Coast Artillery, training was along the usual lines, with emphasis placed on analysis of drill. Ex-caliber practices were held, but were concentrated into a few days preceding service practice, because the 37-mm. ex-caliber guns were not received here until the first week in June. Practice marches with both light and heavy columns, usually at night, were held throughout the year. Following the first day practice, the battalion took part in the day practice; and subsequently held night practice under unfavorable weather conditions. Each battery next fired a special long-range practice with the special allotment of ammunition recently made, whereupon the Battalion moved to Gilbert for maneuvers and target practice under field conditions. The movements to and from Gilbert were made at night, and were without incident.

In the vicinity of Gilbert the ground consists of coral and lava beds, covered in places with a thin layer of red dirt. Much difficulty was experienced in making trial holes and recoil pits, as every one had to be blasted. In order to get the work done quickly it was necessary to get the assistance of the 3d Engineers who took charge of the blasting and with their special drilling equipment accomplished in a few hours what would have taken the battalion several days. The red dirt is, in dry weather, in the form of a light, powdery dust, several inches thick, which, under the concussion of gun fire, rises in a blinding, suffocating, red cloud that not only impedes the work of the gun sections but also, rising at least a hundred feet in the air, gives away at once the location of the position. This difficulty was encountered in shooting in the trails,

and was partially remedied on the day of the service practice by sprinkling several thousand gallons of water on the ground about the guns, with a water sprinkler, borrowed from the Ewa Plantation Company. In spite of this precaution, the guns had to be relayed several times on account of dust obscuring the aiming point. It is believed that a generous use of oil and sand on the ground near the guns would be a permanent remedy.

The organization of positions accomplished, long telephone lines had to be installed over very difficult country. Some trouble was experienced in maintaining them, but it was all good training. The battalion command post and encampment of the battalion headquarters and combat train was located on Puu Kapolei, an eminence 3000 yards east of the batteries, commanding a good view of the entire field of fire. The batteries were so emplaced that batteries "A" and "C" fired to the westward and "B" to the south, covering in all a field of fire of approximately 140 degrees.

Positions were so effectively camouflaged that aerial photographs, taken from an altitude of 6000 feet, did not show any signs of military activities.

The training of the 2d Battalion, Fifty-Fifth Coast Artillery was held at its home station, Fort Ruger, and was similar in scope and character to that of the first battalion. During the last week in July, the battalion moved to Fort Kamehameha by a night march, and after a period of drill and training, held the first service practice. This was followed by a series of special firings in which one battery fired at long range, using a naval transport for its hypothetical target; the second battery, with the personnel in gas masks and the gun sections, plotting section, and primary observer under a concentration of tear gas and smoke, fired at mid-range; and the third battery fired at short range, using an emergency position-finding system, consisting of a coincidence range finder located a little more than 100 yards to the rear of the battery. These special problems were all well worth while. Night practice was then held, after which the battalion left this post and made a long and successful night march to Haleiwa under the most adverse conditions—heavy rain, slippery roads, long steep grades, and tortuous curves.

General Comments

For the firing problems, battery commanders were allowed to select any standard method of fire adjustment that was appropriate to the problem and to the armament used. In the majority of cases the trial shot method was employed. For night practices most of the batteries fired trial shots before dark. I am strongly in favor of trial shots when the powder is unknown, but I believe that after one or two practices

have been held and something has been learned about the powder performance, trial shots are unnecessary, and that it would be better to open fire at once on the target.

Assumed tactical situations, based on the war operations of the unit concerned, were issued in writing to battalion and group commanders thirty minutes to one hour before target practice.

Commanders of all units, from the harbor defense commander down, directed fire from their respective command posts, and lines of communication from higher to lower echelons were installed and in operation at all times.

Much use has been made of Training Regulations, and, aside from the fact that they are still without one covering service of the piece for the 155-mm. G. P. F.'s and railway mortars, they have been adequate. Numbers 435-221, 280, and 325 are especially valuable, and while 435-55 is the subject of much complaint, it is difficult to see where any radical changes can be made and still furnish the data desired. It is suggested, however, that the basis of comparison for determining whether a battery is actually adjusted (see paragraph 35 *b* (2) (b) (6) is not a satisfactory one. The developed probable error of a given target practice or series is determined on the basis of so small a number of shots that it frequently happens that an unusually small probable error will make it appear that a battery is not adjusted when actually it is, or else a probable error greater than normal will indicate that a battery is adjusted when such is not the case. We had instances of both sorts here this year. It would be better to base the comparison on either the range-table probable error or on the probable error developed in a number of practices.

Unilateral spotting was used in the majority of the practices, with good effect. For the practices here the spotter was at Diamond Head, from 10,000 to 18,000 yards to the flanks and about 8000 yards in advance of the batteries—a most favorable position. For one of the practices in the field a unilateral spotter was located about 7000 yards to the flank and 3000 yards in advance of the battery. Using a depression position finder to determine the range from the spotting station to the target, a rapid and simple computation is all that is necessary to get the magnitude of the longitudinal deviation. Airplane observers did good work in a number of practices but they failed in several others. Difficulties arose from engine trouble, radio trouble, radio interference, bad flying weather, and poor visibility.

Conclusions

Time Range Board.—Where Case II can be used the time range board seems very necessary. Ranges can be sent to the man at the

range drum every ten seconds, and by creeping the gun can be laid with sufficient accuracy at all times. This enables the gun pointer to fire whenever the gun is loaded, that is, provided he is on the target—the same way they fired years ago. Of course, with Case III it is different and the firing must be done on the bell to insure accuracy.

Spotting.—By having an observer well on the flank of the battery, good results can be obtained. The proper sensing can always be given. The airplane is desirable, but probably would not be at our service, especially when ranges were down to ten thousand yards, as would generally be the case with the 155-mm. G. P. F. guns. In this case, too, the firing would be so rapid the airplane could not function with success if more than one battery were firing; and it is doubtful if any system could give more than the general position of the fall of the shots. Under such circumstances, however, only the shorts need be reported to insure accuracy of fire. They can be given from the flank of the battery.

Rate of Fire.—The rate of fire should be as fast as is consistent with accurate shooting. This can only be determined by watching the drill of the battery and by analyzing the drill. There is a tendency to shoot the target practice ammunition as fast as may be done even though hits are not being secured. I know I have generally instructed the officers that they would get better results if they trusted more to their trial fire and made few corrections after commencing the record fire. That, I believe, is sound, but occasionally an officer is found who does not make even the most evident corrections. In order to determine just when correction should be made is difficult, but if a curve showing the probability of hitting is constructed, it will be found that if the center of impact is within one probable error of the target, in general no corrections are required in order to secure a high percentage of hits. The probable error will, of course, vary greatly with the range. I have about come to the conclusion that if one is getting six overs and six shorts, or seven overs and five shorts, or even eight overs and four shorts, considering the danger space, no corrections are really necessary; but if the variations are greater than this, then a correction should be made. If all the shots are going over or short the firing should be halted long enough to enable a correction to be applied. It may be that a constant error will be made by the battery even after the trial fire, and unless the battery commander catches this error early in the practice, a no-hit practice will result. If, however, a correction is applied to overcome this constant error, a large percentage of hits may be secured.

Velocity Measurements with the Universal Measuring Camera

By Dr. Inc. Hans Rumpff

Translated by Colonel George Ruhlen, U. S. A., Retired

THE necessity for measuring the initial velocity of every possible shot at firing exercises away from proving-ground establishments has been acknowledged by the artillery in recent years. All other refinements, such as investigating the influence of weather conditions, erosion, etc., can give reliable results only when the principal deciding element—the initial velocity—is also measured. The variations in the initial velocity, as they occur normally with every kind of ammunition, cause dispersions in points of impact that are frequently equal in dimensions to those due to other causes.

At proving grounds the measurement of initial velocities has been carried on during a number of decades with the Boulengé apparatus, an implement not yet surpassed in construction, certainty of operation, and simplicity of service. Theoretically, the applicability of that instrument is not restricted to any definite firing angle, yet in actual practice one seldom goes beyond 20 degrees elevation with the higher initial velocities, in order that the trestles carrying the measuring framework may not become inconveniently high. In consequence, we are confined to rather narrow limits when using rough and inexpensive apparatus.

In order to be able to measure the initial velocity of artillery projectiles when using greater angles of elevation or to carry on the measurements in a terrain unadapted to the use of measuring frames (seacoasts, fortifications, ships), an attempt has been made during the past ten years to develop other and principally photographic methods.

Photography of artillery projectiles in flight is, in the daytime, always dependent, in the first place, upon the prevailing light. While it is possible to secure pictures of artillery projectiles, even of very high velocities, on almost any day of the year in southern latitudes, one is, in northern latitudes, restricted to a few days in midsummer in which pictures fit for use can be made, because of the condition of the sky.

This restriction has been obviated in photography by resorting to small light fuzes (weighing 90 to 100 grams) which burn only about half a second, calculated from the muzzle of the gun. The ballistic

properties of the heavier artillery projectiles are not changed by these light fuzes, which are usually applied on the ground. By using such fuzes one is thus made independent of meteorological conditions at any hour of the day and can produce photographic impressions that are fit for use.

The Universal Measuring Camera is one of the various photographic instruments for measuring initial velocities, of which the construction and measurement results are to be described.

In contradistinction to other apparatus, the Universal Measuring Camera works with films because of safety of transportation of the negative material, a property that is of great importance for an instrument to be used in the field. Glass plates may be broken and one is without results, while films can be transported safely under the most difficult conditions. Possibilities of plate distortations have been adduced against the use of films; but that occurs with glass plates also, although to a less extent. But it plays a very unimportant rôle in comparison with other errors of measurements if care is taken in development of negatives, because the errors due to plate distortions are much less than those caused by other measuring errors.

Now by exposure of the moving projectile, one obtains no sharp single impression of the projectile with this instrument, as might be expected by photographic methods, but instead, an oblique streak across the film. This is a special peculiarity of the Universal Measuring Camera, in which it differs materially from other photographic and kinometagraphic apparatus.

This peculiarity of the impression on the film appears at first sight as a deficiency in the method but shows itself later on as a progressive advance as compared with other methods. Instruments that furnish sharp outlines of the projectile require at least two exposures of the projectile at different points of its trajectory. In consequence of this, one is obliged to resort, by single exposures for measuring initial velocity, to two successive measurements of the negatives: determination of the two points at which the impression of the projectile was taken. Only after computation of these can one determine the distance between these two points. Since the time that intervenes between the two, or a number of, exposures is also measured we can compute the velocity of the projectile. Executed graphically one obtains the time and the path of the projectile. This work is done automatically by the Universal Measuring Camera since it photographs the time, and in a defined and known measuring staff on the film from which the initial velocity can then be computed.

I. Theory of the Measurement of the Initial Velocity with the Universal Measuring Camera

By the equation, $V = s/t$, we see that in measuring the velocity V there come into question the determination of two magnitudes the path s and the time t pertaining to it. Both are measured by the instrument.

a. Measuring the Distance. In measurement of the distance, it is a question of determining the path passed over by the projectile from the photograph that has been obtained. As soon as the location of the camera, as well as its optical axis, is known, one can compute the photographed length of the trajectory from the negative without the necessity of determining or indicating the limiting terminals of this distance

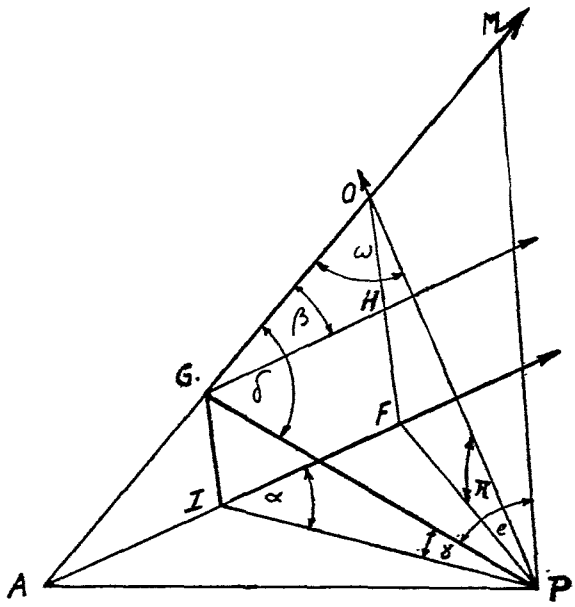

Fig. 1

as is done with the Boulengé instrument. For this reason the photographic method admits of measuring the initial velocity at every desired angle of elevation.

With the photographic measurement of the trajectory length we make use only of the same hypothesis that is used with the Boulengé apparatus: we assume that the path of the projectile shown in the photograph deviates only immaterially from a straight line within the limits shown. In this case, taking up the computation of the projectile's passage, one camera position is sufficient. It is necessary that the instrument have the required fittings for measuring the angles, which

is provided with the Universal Measuring Camera after the manner of the theodolite.

Figure 1 will serve to explain the method of computing the trajectory path s passed over by the projectile from the muzzle of the gun to the limit taken in by the sighting field of the instrument.

Let: G = Gun muzzle = initial point of the distance measured
M = Terminal point of measured distance m
P = Position of camera
PG = Measured distance between camera and gun muzzle
HGM = Angle of elevation of gun = β
GPI = Terrain angle between camera and gun muzzle = γ
FIP = Angle between muzzle-camera line and firing direction = α
GPM = Sight angle of the camera = e
OPF = Inclination of the optical axis = π
MGP = Auxiliary angle in the triangle GPM = δ
GOP = Auxiliary angle in the triangle GOP = ω

The pictured length of trajectory GM is computed by using the auxiliary angle δ. In order that the assumption upon which the measurements are based may actually obtain and the optical axis of the camera may intersect the trajectory at the point O, it is necessary to compute also the angle π and to incline the object glass through this angle.

The computation of the auxiliary angle δ is most easily made by using the adjoining pyramid APIG. In the four triangles of this pyramid, let:

$$AP = A \quad GP = B \quad DI = B.\sin g = D \quad AG = B.\sin g/\sin\beta = C$$
$$IP = B.\cos g = B' \quad AG = D/\sin\beta = C \quad AI = \frac{B.\sin g.\cos\beta = C'}{\sin\beta}$$

By application of the cosine proposition one now establishes a relation in the two triangles AGP and AIP between the four angles α, π, g, and δ, namely:

$$A^2 = B^2 + C^2 - 2\,BC.\cos(180 - \delta) \quad . \quad . \quad . \quad . \quad . \quad (1)$$
$$A^2 = B'^2 + C'^2 - 2\,B'C'.\cos(180 - \alpha) \quad . \quad . \quad . \quad . \quad . \quad (2)$$

Equalizing (1) and (2) and introducing the angle functions in place of the triangle sides give:

$$B^2\cos^2 g + \frac{B^2\sin^2 g\cos^2\beta}{\sin^2\beta} - 2\,B^2\cos(180 - \alpha)\frac{\cos\beta\sin g\cos g}{\sin\beta} =$$
$$B^2 + \frac{B^2\sin^2 g}{\sin^2\beta} - 2\,B^2\cos(180 - \delta)\frac{\sin g}{\sin\beta}\,.$$

After multiplying through by $\sin^2\beta.B^2$ we isolate the member

with $\cos \delta$ and unite the other members, and (noting that Cos $(180 - a) = -\cos a$) we have:

$$
\begin{aligned}
&2 \sin \beta \sin g \cos \delta = \\
&2 \sin \beta \cos \beta \sin g \cos g \cos a - \sin^2 \beta + \sin^2 \beta \cos^2 g - \\
&\quad \sin^2 g + \sin^2 g \cos^2 \beta = \\
&2 \sin \beta \cos \beta \sin g \cos g \cos a - \sin^2 \beta \ (1 - \cos^2 g) - \\
&\quad \sin^2 g \ (1 - \cos^2 \beta) = \\
&2 \sin \beta \cos \beta \sin g \cos g \cos a - 2 \sin^2 \beta \sin^2 g
\end{aligned}
$$

Dividing through by $2 \sin \beta \sin g$, we have, as concluding formula for computation of the auxiliary angle δ:

$$\cos \delta = \cos a \cos \beta \cos g - \sin \beta \sin g \quad . \quad . \quad . \quad . \quad (3)$$

The computation of the pictured trajectory path is now made by using the above computed auxiliary angle δ, likewise the known sighting angle of the camera $= e$, and the measured distance GP $=$ B for:

$$m = \sin e . \mathrm{B} / \sin (180 - e - \delta) \quad . \quad . \quad . \quad . \quad . \quad . \quad . \quad (4)$$

Equation (4) makes possible the computation of all values of m but in actual practice one can utilize values of m only within definite determined limits. As soon as m with velocities down to 500 meter-seconds exceeds 100 meters, the assumption that the pictured trajectory distances or paths are straight lines no longer holds. Furthermore, the possibility of photographing the projectile in this trajectory is dependent upon and determined by the size of the projectile. From these considerations we have, as the outer limit for photographic measurement of a trajectory interval velocity, a distance of 350 caliber lengths, in round numbers, in which 100 meters obtains as the outer limit. Since the trajectory, especially when firing at high angles of elevation, can generally not be indicated on the terrain, it is also impossible to point the instrument on the path of the projectile with the aid of the focusing glass alone. One must rather calculate the inclination of the objective and set the object glass accordingly. One then revolves the ground glass plate of the instrument until the muzzle of the gun appears on a fixed mark on the plate.

The inclination of the object lens π is determined by the triangle GFP. (Fig. 1).

In this we have:

$$
\begin{aligned}
&\mathrm{OF} = \mathrm{OH} + \mathrm{HF} = \mathrm{OG} . \sin \beta + \mathrm{GI} = \mathrm{OG} . \sin \beta + \mathrm{B} . \sin g \\
&\mathrm{OP} = \mathrm{B} . \sin \delta / \sin \omega, \text{ wherein: } \omega = 180 - \delta + e \\
&\mathrm{OG} = \mathrm{B} . \sin e / \sin \omega, \text{ consequently:} \\
&\mathrm{OF} = \mathrm{B} . \sin e . \sin \beta / \sin \omega + \mathrm{B} \sin g \\
&\mathrm{Sin}\ \pi = \mathrm{OF} / \mathrm{OP} \\
&\mathrm{Sin}\ \pi = \frac{\sin e \sin \beta + \sin g \sin \omega}{\sin \delta} \quad . \quad . \quad . \quad . \quad . \quad . \quad . \quad (5)
\end{aligned}
$$

b. Measuring the Time. The second element of the initial velocity measurement, the time t, required by the projectile to pass through the photographed interval of the trajectory is registered by the Universal Measuring Camera on the same film upon which the picture of the projectile is formed in the shape of an oblique line. The movement of the film is used for measuring the time t.

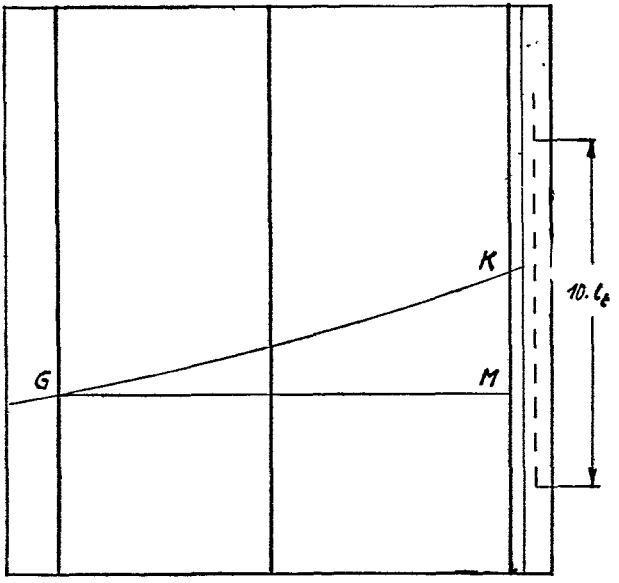

Fig. 2

In order to obtain a diagram of its motion in rectilinear coördinates, as a result of the impression taken of the projectile, one must arrange that:

(1) The picture of the projectile moves parallel to an edge of the film strip.

(2) The film shifts at right angles to this motion during the measurement.

One obtains then a diagram in which the lines of the path of the moving projectile are represented in a definite perspective measuring-rule as *ordinates* and the times in a similarly formed measuring-rule as *abscissas.*

In graphical construction these requirements are fulfilled by the conditions that:

(1) By computation of the inclination π, and by fixing the position of the camera in accordance therewith, the optical axis of the camera intersects the trajectory.

(2) That the film is so arranged that its edge, extending in a direction at right angles to that of its motion, runs parallel to the projection of the path of the projectile GM.

(3) That time impression marks are made on the moving film in the direction of its movement.

With (1), compare the computation of the tilting angle π above.

With (2), when the object glass has been set to the calculated angle π with the assistance of a delicate arc measure of 165 mm. (read by a micrometer scale to $\pm$ 30″), the instrument and the side of the casing are turned until the image of the gun muzzle (point G of Fig. 1) appears at a fixed mark on the frosted lens. The film drum is then parallel to the projection of the trajectory and is in the projection plane GPM.

With (3), time marks are produced on the continuously moving film by means of an electromagnetic-excited tuning fork, during the exposure of the moving projectiles, in the form of an interrupted line on the edge of the film (Fig. 2) by which the measuring scale for time is given.

The computation of the time of passage T for a definitely calculated measured distance GM (Fig. 2) is given with the aid of this time measuring scale, since the time for reappearance of the marks is known.

For example: Let the interval for 10 timing marks $= 10.1_t$ measured to 23.5 mm. From this we have for the length of one timing mark on average value of 2.35 mm. Let the rise of line of trajectory of the projectile MK be now measured at 18.2 mm. (while the photographed trajectory GM has been computed at 21.8 mm.). Then one obtains for the time of passage T:

$$T = KM.\ t_{l_t}\ l_t \text{ (in seconds)} \quad . \ . \ . \ . \ . \ . \ . \ . \ . \quad (6)$$

or, the values above assumed to be fixed:

$$T = 18.2 \times 0.00465\ \ 2.35 = 0.0360 \text{ seconds,}$$

in which equation the factor t_t represents the time value in seconds that lies between two markings of the tuning fork from the measured length l_t. In the foregoing example this time value was assumed at 0.00465 seconds for a complete tuning fork vibration.

The tuning forks of the Universal Measuring Camera are adjusted when the instruments are delivered and the measured time value for a complete vibration made of record for each instrument.

The computation of the average velocity of the projectile on the photographed trajectory interval GM is then calculated at:

$$V_m = GM\ \ T = 21.8\ \ 0.0360 = 606 \text{ m.–secs.}^{-1}$$

II. Description of the Universal Measuring Camera

Figure 3 shows the Universal Measuring Camera from the side and Fig. 4 in section in order to make the principle of measurement plainer.

The camera is supported on a ring-formed base (1) which carries an axis (2), around which the camera can be revolved vertically. A

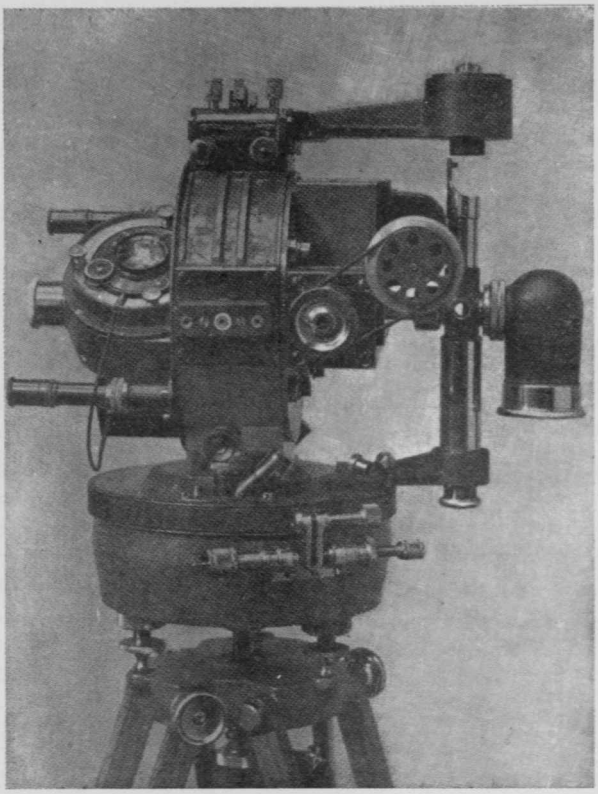

Fig. 3

boxlike foot (3), with three adjusting screws (29), takes in this base plug and makes, by means of the threaded top (30), a compact combination with the stand.

A circular cover (4), closely combined with the body of the base, serves to permit turning this base body about its axis and at the same time to hold it fast by means of a sort of braking band (5) in the position in which it is set. The clamping screws, as well as the micrometer screws, are plainly visible in Fig. 3, the latter serving to permit a slight turn of the camera to one side.

The camera base (1) supports two parts, (6) and (14), which form the real *camera obscura* of the camera, as well as all other parts of the construction needed for measuring.

The forward partition (6) carries the object glass (7) of the camera in a trough-like depression, from which the entering light is diverted by a mirror (8) set fast to the wall (14). The object glass is held in

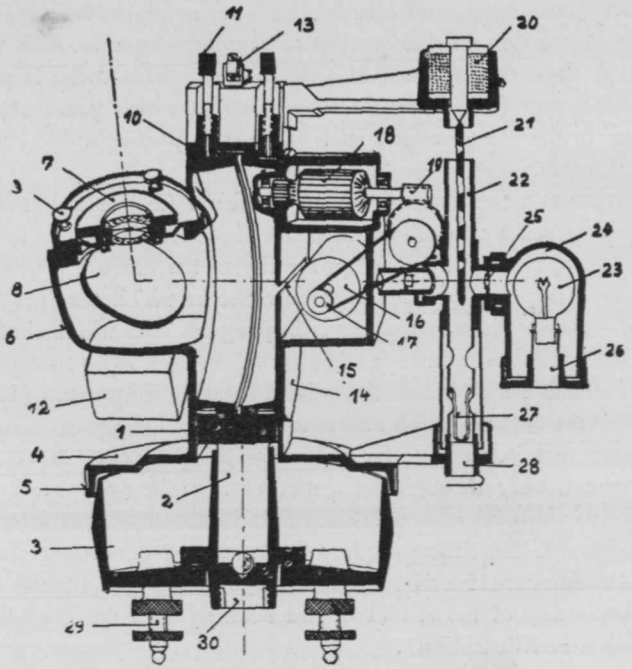

Fig. 4

its casing with specially designed distance rings with screws (9). These distance rings can be exchanged in order to permit the camera to be used for measuring gun recoil. When one uses the lowest distance ring the camera is set for infinity in which position it is used for projectile measurements, while the strongest distance ring permits exposures at a distance of 1.5 meters from the objective.

The object-glass is provided with a quick-acting shut-off which is tightened before measurement and opened by means of a special contact device on the gun by an electric release (12). By that the shut-off is so arranged that the open time interval corresponds to the time which the film drum (16) (to be described later) requires to make one revolution.

The object-glass wall (6) can be revolved 360 degrees about the base support axis (1). The micrometer setting is accomplished here also by means of a brake band and clamp screw (10) and (11). Two levels (13) permit permanent control on accurate setting of the instrument. A delicate silver arc, which is let in on the front side of the base (1), permits the inclination of the optical axis of the object glass to be read accurately to one minute of angle with the aid of two micrometer microscopes, and allows a half minute to be estimated safely.

The impression of the projectile is made upon a film which is secured to the circumference of a drum (16). This drum is placed in a special casing (not shown in the drawing) which permits changing the films in the same manner as is done with photographic instrument in a dark room.

In order that the film secured to the drum (16) may not be struck to its full extent by the light from the objective, but by only a small part of the open field in direct proximity to the moving projectile, the casing wall is provided with a narrow slit in which the image of the projectile moves while measuring is in progress, and which shuts off all other light from the film.

This slit, and with it also the axis (17) of the film drum (16), must always be set so that its direction is parallel to the projection of the trajectory; that is, so that the picture of the projectile moves, during measurement, only through the center of this slit and parallel to the direction of the axis of the drum. This is accomplished after setting the objective to the tilting angle π by revolving the casing wall (14) around its horizontal axis until the image of the gun muzzle appears at the beginning of the slit (15) and actually at a mark on the plate (not shown in illustration).

The motor (18), which is built into the casing wall, is set in motion before starting the measurement. It then sets in motion the film drum by means of a contrivance (19) operated by a string pull. When the drum has reached a revolving index number the measurement operation can proceed.

On firing, the object glass is thrown open automatically by means of a special contact, and this is done through the cannoneer who discharges the gun. This contact operates quite automatically and cuts off the current at the moment when the cannoneer pulls back the striker of the breech. The shut-off of the objective is then opened by the electric opener and is closed again after about one-tenth of a second, an interval of time in which the film drum also makes about one complete revolution and the projectile passes through the sighting field of the instrument.

In Fig. 4 the measure of the time, which is accomplished on the revolving film cylinder in the form of a line, is not made by means of a tuning fork but by a freely falling staff which is held up before starting the measurement by a magnet (20). This method of marking the time has also been used but it is adapted only when the instrument is set up on secure ground.

The falling staff (21) here carries five window-shaped openings through which the light rays of a lamp (23) can penetrate the system of lenses (25). By this means marks are made on the revolving film whose length of openings and comparative unmarked intervals are so adjusted that each impression on the film corresponds to a time interval

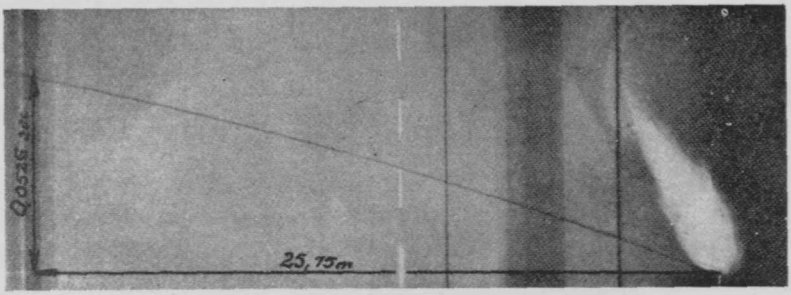

Fig. 5

of 1/100 of a second. The manner of these markings is exactly the same as those made by a tuning fork (compare with Fig. 2); they differ from the latter only by this: that they are usually longer and the time intervals measured by them are larger.

Figure 5, an actual impression of a 7.5-cm. shell, shows in its center four white streaks which were made on the film by the falling staff above described. The oblique line shows the path of the projectile. The upward inclination of this line, the so called "rise" would be greater as the velocity decreases. In case of $v = o$, (with a stationary object) we have direct vertical lines, parallel to the time marking strokes. The dark, vertical bands on Fig. 5 are due to such standing objects (telephone poles). The white flag at the end of the projectile is a distorted picture of the burning powder gases which emerge from the gun barrel after firing.

Figure 6 shows the instrument on its stand, which is weighted to increase its stability, with a suspended box which contains six accumulator cells that furnish the electric current needed for operating the instrument, exclusive of that used for operation of the release and closing apparatus for the objective, which must have different tensions corresponding to the length (or resistance) of the cable between gun

and instrument. The current for that is furnished by a second transportable battery, usually in the form and size of an automobile battery of 6 to 8 cells.

III. Results of Measurement

The results of measurements given below are only some of those which have been made during the past three years on European prov-

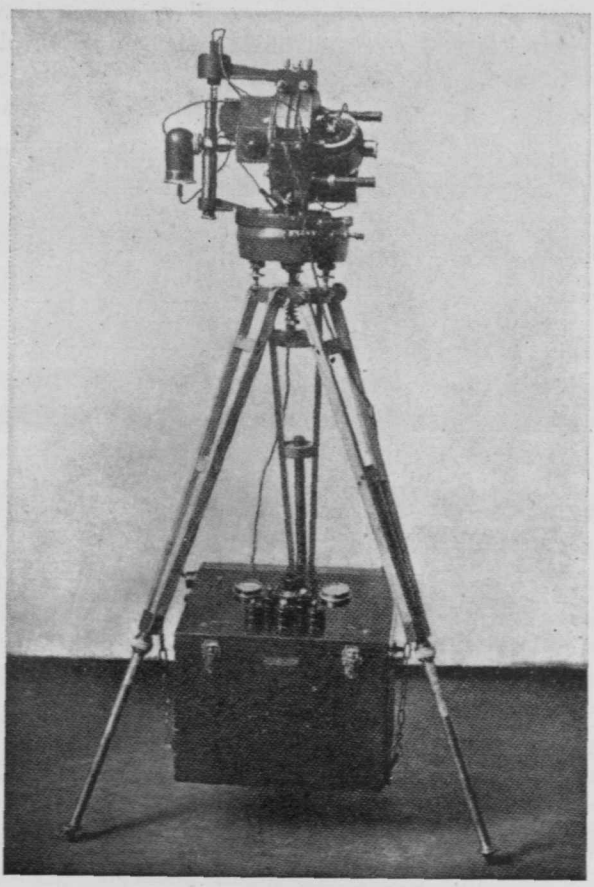

Fig. 6

ing grounds and for the special purpose of comparison with those obtained by the Boulengé apparatus.

In the following table:

Rise = Distance MK (Fig. 2) in mm.
t_1 = average length of impression mark in mm.
Measuring interval = computed length of GH (Fig. 1) of the trajectory in meters.

Time of Passage = T in seconds computed by formula (6)

V_m = average velocity through the measuring interval *m* in meter-seconds.

V_b = average velocity V_{25} of the same projectile measured with the Boulengé apparatus in meter-seconds.

Diff. = percentage difference between av V_m and V_b.

Shot No.	Cal.	Rise	t_1	Measured Length	Time of Passage	V_m	V_b
	mm.	*mm.*	*mm.*	*mm.*	*sec.*	*m.-sec*$^{-1}$	*m.-sec*$^{-1}$
1	76	13.3	2.53	11.95	0.02439	490	491
2	76	13.9	2.66	11.95	0.02424	493	487
3	76	15.3	2.94	11.95	0.02440	490	490
4	76	15.4	2.90	11.95	0.02462	485	481
5	76	15.4	2.90	11.95	0.02462	485	483
6	76	17.0	3.15	11.95	0.02496	479	481
7	76	15.5	2.90	11.95	0.02476	482	483
8	76	26.6	3.72	19.80	0.02560	773	
9	76	35.5	4.98	19.80	0.02580	767	
10	76	39.0	5.48	19.80	0.02550	777	
11	76	22.2	5.25	11.50	0.01510	760	
12	76	17.2	4.98	9.50	0.01240	767	
13	76	10.4	6.00	4.80	0.00621	773	769±3
14	76	8.3	5.20	4.40	0.00571	771	
15	76	6.8	4.98	3.80	0.00489	777	
16	76	7.0	5.20	3.70	0.00482	768	
17	47	31.6	2.95	43.70	0.05500	795	
18	47	30.8	2.62	43.70	0.05460	801	
19	47	30.8	2.58	43.70	0.05550	787	
20	47	35.7	3.00	43.70	0.05520	792	
21	47	36.7	3.10	43.70	0.05490	796	
22	47	35.5	2.95	43.70	0.05600	781	
23	47	35.5	2.94	43.70	0.05610	781	790±5
24	47	34.0	3.05	41.20	0.05170	797	
25	47	11.5	1.09	38.30	0.04850	790	
26	47	11.0	3.25	12.40	0.01570	790	
27	105	48.2	3.20	17.27	0.06990	247.1	246.0
28	105	47.2	3.10	17.27	0.07090	243.8	243.3
29	150	22.8	2.95	35.00	0.03585	976	972
30	150	13.3	1.43	35.60	0.03645	977	970
31	150	24.8	2.62	35.60	0.03720	960	970
32	150	18.4	2.23	31.30	0.03235	968	970
33	150	20.4	2.80	28.00	0.02850	981	970

Shots 1 to 3: normal projectile, by day, without light fuze.

Shots 4 to 7: normal projectile, by day, with light fuze.

Shots 8 to 16: normal projectile, by night, with light fuze and at 70° elevation.

Shots 17 to 28: like 8 to 16, but at 80° elevation.

Shots 27 to 28: normal projectile, by day, without light fuze.

Shots 29 to 33: like 27-28.

IV. Errors of Measurement

The above described photographic velocity-measuring method is, like every other measuring system, subject to errors that are caused in

part by preliminary measurement in preparation for taking impressions (setting up of the instrument and fixing the angles α, B, g, as well as in measuring the distance B), but in part also by measuring the film and in putting the apparatus away.

Sources of error may be classified in seven different groups having greater or lesser influence on the results of measurements. They are grouped briefly, in the following notes, according to the degree of their effects and are later discussed more in detail according to their importance in the handling of the apparatus.

Error	*Kind*	*Per Cent*
No. 1:	Errors in rotating the objective	0.00 — 0.00
No. 2:	Dislocation of the film layer	0.02 — 0.05
No. 3:	Errors in measuring elevation of the gun	0.02 — 0.06
No. 4:	Errors of the angles α and g, and of the distance B	0.01 — 0.03
No. 5:	Errors of measure in setting up camera	0.01 — 0.03
No. 6:	Errors in measuring time	0.10 — 0.15
No. 7:	Errors in measuring film	0.10 — 0.20
	Sum of all errors	0.26 — 0.55

Possible maximum of all errors	0.8%
Possible minimum of all errors	0.2%
Probable mean of errors	0.4%

a. Errors in Rotation of Objective. These errors, which should receive attention in all normal photogrammetry, because one determines the angles for forward indentation from the distance measure of the negative, in combination with the focal length of the object glass, do not play any rôle in the photographic method above described, since one determines the path of the projectile by means of the constants of the instruments and not from the film. The sighting angle of the objective is measured in the construction of the camera and is transferred to the film by fixed marks, in the shape of parallel black lines. In consequence there is no need of a calculation, according to photometric formulas, for ascertaining the length of the measured trajectory.

It is therefore a matter of indifference what kind of objective one uses, provided it has a large sighting angle with adequate strength of light. The objective types of Zeiss (Tessar 1:2.7, with 47° sight angle) and Goertz (Dogmar 1:4.5, with 56° sight field) are, at this time, best adapted. The objectives available today with a relative opening of 1:1.8 do not come into consideration for these instruments since the greater light effect is obtained at the expense of the sighting field and an objective of that kind has no advantages compared with the types above mentioned.

b. Distortion of the Film Layer. With careful handling of the film during developing and drying, distortion of the layer is avoided to a great extent. But careful attention must be given to this in tropical regions and at high temperatures. The dark room must have good ventilation, the baths must under certain circumstances be ice cooled and held at the normal of 15°— 18° centigrade. In drying, the film should not be hung up, but laid horizontally on glass plates and protected from dust.

c. Errors in Measuring Gun Elevation. In general, gun elevations are measured with an accuracy of $\pm$ 1/16 degree, equal, approximately, to 4 minutes of angle. To this must be added the "jump" of the gun when fired.

For these reasons the angle β may be erroneously measured. But the auxiliary angle δ will be influenced by this error in measurement to the extent of the error of the measure in angle of elevation only when α is 0 or 180°, that is, when the apparatus stands directly under the line of the trajectory or behind the gun in direction of the projectile's flight. In all other positions the influence in error of elevation and departure will be less. It should, at any rate, be recognized and valued to the extent of an estimate of its influence on the result.

In order to reduce this error to the minimum, it is advisable to determine the elevation of the gun with a clinimeter rather than with the usual appliances, so that then only the error due to jump affects the result.

d. Measuring Errors of the Angles α and g, and of the Distance B. As long as the angle of direction α lies between 80° and 120°, the value of the auxiliary angle δ varies materially only when the terrain angle g is also considerably larger than about 5°.

In case $\alpha = 90°$ and $g = 0$, δ holds the same value for all elevations B, namely 90°. The angle α is usually measured from the gun with the aid of the battery directing arc or the telescopic sight. The accuracy of this measurement is seldom less than $\pm$ 8 minutes when the measuring appliance is, as usually the case, provided with 6400 marking lines for 360° The possible error should in this case, be also calculated and valued as a possible error whenever it exceeds in amount 0.1%.

The measure of the length B can usually be made with a reasonable degree of accuracy, since with the normal distances of 30 to 50 meters an accuracy of $\pm$ 0.08% can be achieved with the customary measuring rod or tape, even with rapid measurements.

e. Measure Errors in Setting the Camera. The error in setting the inclination of the objective—angle π—ranges from $\pm$ ½ minute to $\pm$ 1 minute of angle.

This error causes failure of the optical axis to intercept accurately the line of flight and to pass over or under it. This error is less apt to manifest itself by a less sharply defined outline of the projectile than by a misrepresentation of the "rise," because the trajectory then does not remain parallel to the axis of the film drum but makes a slight angle with it.

With the focal length as applied, the error in setting may reach to ± 0.08 mm. It has therefore to be reckoned with when the rise is small (up to about 10 mm.). If the rise comes to about 40 mm. it can generally be disregarded because it is then less than 0.1%.

One should, therefore, when using the instrument, take care to see that the velocity of the film is so chosen that the time for one revolution of the film requires only about three times as much time as is needed by the projectile to pass through the sighting field of the camera. This is attained by increasing or reducing the motion of the motor by regulation of the tension. In all cases a rough offhand calculation of the time is sufficient, since accurate measure of time is determined by the tuning fork or the falling staff. The shut-off of the object glass must then also be adjusted to the time of revolution of the film drum in order to avoid excessive light on the film.

f. Measuring Errors of Time. The measurement errors above referred to, especially those of erroneous setting of the objective and those of erroneous setting of the lenses, give rise, in the main, to inaccuracy in time measurement, since they misrepresent the measure of the "rise" of the path of the projectile.

By revolving the focussing glass, with the cross wires that should be set on the center of the gun muzzle one may readily make errors of the fractional part of a millimeter if the muzzle is large in diameter and the apparatus is standing near the gun. It is then expedient to indicate the center of the muzzle with a target with a black and white square field, in order that this error shall not exceed 0.05 mm. One can focus on this with an assurance of sufficient accuracy since the dimension of the cross wires are only 0.02 mm.

With daytime exposures of the projectile without light fuses the measuring errors of the "rise," and with them of the time, are to be feared when, on account of deficient light, we obtain only a dim impression of the path of the projectile and we are obliged to mark this barely visible trace at some points with prick points of a fine needle, without using a microscope. In such cases the measuring accuracy will reach a value of ± 0.2 mm. only, and the measure of time must become correspondingly inaccurate. (With a "rise" of about 40 mm. at about ± 0.5%).

By using light fuzes one always obtains well defined black rising lines which permit measuring with the microscope to an accuracy of $\pm$ 0.01 mm., and the error is thereby materially reduced.

The error in computing the time by measuring the lengths of timing marks becomes greater as the want of uniformity in motion of the film drum increases during the exposure. But this source of error can be greatly lessened by letting the motor run for a time—about one minute —before firing, by which good constancy in length of time marking dashes is almost always attained.

The error of length in a time marking line expressed in seconds varies between $\pm 1.5 \times 10^{-5}$ seconds; for measuring a number of time mark lengths, which one measures as positive in order to obtain a good average value, the error is correspondingly increased. The accuracy to which one finally determines a time mark is about $\pm$ 0.02 mm.

g. Errors in Measuring the Films. This concerns measuring the "rise" of the path or trace of the projectile. That question has already been discussed in connection with sources of errors that give occasion to it.

Generally it may be stated that measuring without use of a microscope is possible to an accuracy of $\pm$ 0.2 mm. only—which signifies a measuring error of greater or less weight according to the dimension of the "rise." Those films that can be measured with a *komparator* with an accuracy of $\pm$ 0.02 mm. will always be found to have given most accurate valuations.

In summarizing we may say that generally, by combination of all the above-discussed sources of error, the accuracy of photographic measurement of velocities with the Universal Measuring Camera varies within the following limits:

Computation of the Measured Distance: $\pm$ 0.1 to 0.2%,
Computation of the time of passage $\pm$ 0.2 to 0.4%,

from which there results a computation of the velocities of, in round number, 0.3 — 0.6%. This has, in actual practice, been confirmed by comparison of measures.

The probable deviations of the measured values from true values is about $\pm$ 0.4% but is fully adequate for the purposes required.

Tactical Inspection by the Harbor Defense Commander

By MAJOR R. S. ATWOOD, C. A. C.

WHENEVER I think of an inspection it calls to my mind an inspection system I witnessed some years ago in another country where a small street car company employed a field inspector of inspectors of street car conductors. This struck me at the time as very amusing, but in view of the number of inspections a battery of Coast Artillery gets today, that street car company seems to have been somewhat negligent in supervising the collection of fares. We have General Inspections, Materiel Inspections, Training Inspections, and Tactical Inspections, both formal and informal, and all imposed in the course of a year upon a unit by several different officials.

This exhaustive system had its beginning in the creation of the Inspector General's Department in 1777. In 1778 that able soldier, Baron von Steuben, was appointed Inspector General of the Colonial forces and immediately created a model company which should be the standard for the remainder of the Army. This, together with many and thorough inspections, produced remarkable results, as our system today, with a little pressure where necessary, still does.

A formal inspection is an inventory or final examination of both the commander and his command, and if there are not too many of them, each one should be a source of satisfaction and profit to all concerned. Human nature is such that we all need watching of one kind or another in order to do our best.

Before proceeding to detailed consideration of the Tactical Inspection of a Harbor Defense let us orient ourselves by considering the general subject of Tactical Inspections. These inspections are prescribed by A. R. 265-10 and T. R. 10-5 for the purpose of promoting and ascertaining the efficiency of training and instruction, the battle efficiency of units and officers, and the readiness of a command for active field duty. For our purpose the last appears to include the other objectives and may be considered the object of a tactical inspection, that is, to promote and ascertain the readiness of a command for active field duty. A tactical inspection should be concerned only indirectly with materiel and training, as these subjects are properly covered by materiel inspections and training inspections.

Formal Tactical Inspections of the Harbor Defense are made yearly by the Corps Area or Department Commander, the District Commander, and the Harbor Defense Commander, in inverse order. The Harbor Defense Commander's inspection may be considered in the nature of a practice game for the inspections to follow and the Corps Area or Department Commander's inspection, coming as it does at the end of the training year, as the final examination for the commander and his command.

Regulations prescribe that tactical inspections will comprise actual solutions by commanders and individuals of tactical, field firing, supply, and communication exercises sufficient for the purposes of the inspection, by units at maximum available strength, equipment and transportation, with modifications when necessary due to reduced strength. The formal annual inspection follows the formal inspections of their units by subordinate commanders and presumably numerous informal inspections by the Harbor Defense Commander.

At the conclusion of the Harbor Defense Commander's inspection a critique should be held, participated in by all officers. The commander is required to prepare a record of his inspection setting forth the results for the information of superior and subordinate commanders.

With this brief review let us consider Harbor Defense Tactical Inspections we have witnessed in the past and determine if we can how closely they conform, not to the regulations, but to the real mission of such inspections, keeping in mind the real objective, which is to promote and determine the readiness of a command for active field service, or in other words, for war declared at the termination of the inspection by a strong hostile naval power and announced by the appearance of his fleet and transports off our own Harbor Defense.

In the usual inspection the Harbor Defense Commander knows as much about his command at the beginning of the inspection, through the materiel inspection of his Ordnance Officer and Artillery Engineer, required by regulations, his own informal inspections continuing throughout the training period, and various other sources of information, as he does at the conclusion of the formal inspection. Too frequently it is a formal ceremony, even an annoying one for all, conducted to satisfy the regulations.

Often there seems to be confusion as to what it is all about. In case of training, this is natural, but materiel is also drawn in and the polish on the brass work receives much attention so that it often really becomes a general inspection.

In case the inspections of subordinate commanders are made at the same time, and the staff is present in full strength, the ceremony

may become a procession of pomp, creaking boots and jingling spurs, stiffly noticing some of the bait the wily sergeants have prepared in order to detract attention from things they haven't found time to attend to. It is indeed easy to forget the mission and just make an inspection.

In recent years the General and Special situations have taken their place in our tactical inspection, paralleling mobile army problems. Sometimes however, it is the form without the substance, quite artificial and without influence on action taken, which, for Captain X, is still, "Fire ten rounds and report." There are reasons for this situation and it might be well to consider some of them.

Due to lack of mobility, the tactics of fixed armament is simpler if not different from that of mobile forces. In fact, there is a tendency to work on war game lines, look the hypothetical ship up in Jane, consult penetration data, and by a few rules determine the kind of ammunition, number of rounds, target in column or line, and consider a tactical problem solved. A technical problem and a tactical problem are not the same, nor can Coast Artillery tactics be limited to the correct application of a few formal battle orders and searchlight orders.

There are so many inspections and such continuous duty with summer camps, and other routine and special duties that it is not strange if a tactical inspection is considered just one more thing to get through with. Another handicap possible is the war game, an excellent thing in its place and within limits but like vocational training not now so much in vogue as at one time. It may have obscured the bay for some who played it too long and have led to a routine conception of Coast Artillery tactics. I believe, however, our problem presents a more fundamental difficulty.

What are the basic and fundamental principles of Coast Artillery tactics? We have the positive system of Harbor Defense, it is true, and are giving fixed defense tactical problems at the schools, but as I see it, we have not entirely caught step with the rest of the Army, which is not strange, as we did not have the experience of combat in our harbor forts during the war. Further, all Coast Artillery officers have not yet been indoctrinated with the ideas so far established.

In our insular possessions where full strength garrisons are present and in the larger defenses in the Continental United States, inspections are conducted in a practical and satisfactory manner, but the Harbor Defense that now has one battery where formerly there were many times that number is quite likely to fall far short of a profitable tactical inspection.

Keeping in mind the object of a tactical inspection, it appears that the only way a Harbor Defense Commander can determine the fitness

of his defenses for war is to create a war situation problem and then solve it as naturally as possible, that is, to use as far as possible the applicatory system, remembering that basically we want to test the team work and tactical proficiency of the command and not the training of individuals and units or the condition, suitability and sufficiency of materiel, properly determined by other inspections and studies.

Since we are testing our war readiness as a Harbor Defense we must simulate our war situation as far as possible by filling all key positions in our command and communication system. National Guard and Reserve officers and key enlisted men on war assignment to the Harbor Defense should be encouraged to be present and participate in their war positions, either at their own expense or under one-day orders. Enlisted men of the defenses commissioned in the reserve corps and assigned to the defenses should function in their war assignment for the day. Subordinate units have had a tactical inspection by their commanders previously and for this occasion we are not particularly concerned with the tactical proficiency of any subordinate unit as a unit.

We must therefore, where necessary, withdraw individuals from their units to fill war assignments. Subordinate units will still function as such in their war-time assignment at slightly reduced strength and lend to the realism of the war problem. We may be tempted to go so far as to fire target practice to add to this realism, but I believe, due to the necessity of records and officials, the small amount of ammunition available, and the conditions under which it has to be fired, that no target practice should be attempted with the larger guns.

At least a week before the day of the inspection preparations should be begun. A declaration of war should be announced and a reasonable and realistic general situation released to the command. Instructions would be issued announcing the making effective war assignments of officers, Regular, National Guard and Reserve, and key enlisted men, on H–hour, D–day. Arrangements and details would be made for recording all actions and orders on the day of the inspection. An administrative order would be issued covering supply, personnel, medical assignments, guards, and similar subjects, effective D–day. In these advance preparations the staff would perform its proper functions.

In order to simulate war conditions the action must develop gradually. To accomplish this it is proposed that some qualified officer, the Harbor Defense Executive, for example, become a casualty before D–day and become not a director exactly but the individual from whom all enemy information and defense casualty reports will be received. This director, as we will call him for purposes of discussion, would

receive from the Harbor Defense Commander an advance copy of the special situation before D–day and would be informed by him of the general form the commander desired the action to take. The director would then in advance of D–day prepare hypothetical information reports from the local Navy forces, Air service, the sub-sector commander, and information agents of the command, with hours of release such as would simulate actual war conditions. He would in advance consider such enemy and Harbor Defense casualties of materiel and personnel, to be announced during D–day, as will lead the action along the lines desired.

This advance preparation has been confined largely to the commander and his staff so that the normal activities of the command have gone on as usual.

D–day and H–hour, previously unknown to all regulars except the commander, are announced to the command early in the day decided on, and reports begin to come into the Harbor Defense command post from the director by phone, he with an assistant having been established at some other place in the defenses. D–day from 8:00 A. M. until 10:00 P. M. should be divided into three or four periods within each of which a simulated day of defense will be fought.

The enemy attack will assume some of the various forms listed in *Joint Army and Navy Action.* There will be an air attack, friendly ships will be chased into harbor, the usual bombardment and run by, or better a determined landing attack near the defenses. Smoke and gas will be used, raids will necessitate the close defense of batteries by their own rifles and machine guns, small boats may tow targets to simulate the latter. Major caliber gun crews will have to shift to their secondary armament. Command posts and signal communication will be destroyed. Calls for fire will be received from sub-sector or sector commander. A battery commander may have actually to move and emplace a mobile battery during the day, much to his surprise, and a planter detail may have actually to prepare and plant a mine or so. Care will be taken that the Surgeon, Quartermaster, Adjutant, Chaplain, and others of the command usually immune from the annoyance of tactical inspections are required to concern themselves. With two hours for meals, out of the fourteen proposed, there remain twelve hours, or three four-hour hypothetical days, which will of course each include a hypothetical night. All personnel will not be working all the time but as far as possible units will function as such and at maximum available strength.

Skeleton harbor defenses will have more reserve and national guard personnel to draw from to fill various positions but will have to spread

their own personnel out thinner. This may not be a drawback as regular army cadres of inactive units may, for a day, function as such and find out for the first time that they are cadres.

If a harbor defense inspection can not well be arranged on these lines where there is only one company present, recourse may be had to map problems, war-game exercises, and problems in supply, equipment and processing, for officers and key men.

On the day following the tactical inspection should be held the critique, when step by step, order by order, and action by action, the war maneuver will be fought over by all officers under the supervision of the commander. He will constructively criticize and analyze actions taken, being very careful in his later report to acknowledge merit where he found it, as this will be the most effective measure he can take toward making next year's inspection better.

Some of the advantages of such an inspection are:

It can be put on a competitive basis.
It will prove interesting and instructive to all participating.
Responsibility for mistakes is fixed at the critique by records kept. Actual rates of naval vessels will be used in the analysis although targets may have been towed to simulate the enemy.
It increases familiarity with the possible battle ground of the defenses and their employment in battle.
It promotes constructive thinking and serious consideration of war responsibility.
It promotes initiative in officers and men and discloses defects.
It promotes and tests out team work.
In fact it tests the commander, his staff, his command and its responsiveness to his will, his supply system and communications, and does all it is possible to do in time of peace to determine and promote the readiness of the Harbor Defense for war.

The pacifists include as military expenditure the amount we pay for pensions on account of the Civil War. If we had been prepared for the Civil War, we should have had a mighty short war and few pensions.—*Representative A. P. Gardner, of Massachusetts.*

The Coast Artillery Corps

[Reprinted by permission from the *Recruiting News*]

IN 1789 the entire Artillery organization of the Army consisted of a single battalion of four companies with a strength of 14 officers and 280 men, known as "The Battalion of Artillery," and the proportional part of a total military establishment of less than 900 officers and men of all branches of the service.

Congress increased the artillery personnel in 1794 to a total of 95 officers and 992 men, and in the reorganization which then took place they became the "Corps of Artillerists and Engineers."

In 1798 Congress increased this corps by one regiment of three battalions of four companies, and in the following year changed the corps and regiment into two regiments of four battalions of four companies each and a total strength of 182 officers and 2088 men.

The Artillery and Engineers were separated in 1802 and the Artillery reorganized as the "Regiment of Artillerists," with five battalions of four companies and a strength of 106 officers and 1520 men.

Congress authorized the addition of one regiment of Light Artillery of ten companies in 1808, and in 1812 two regiments of Artillery. Thus for the War of 1812 the Artillery consisted of one regiment of Artillerists, one regiment of Light Artillery and two regiments of Artillery, with an authorized strength of 237 officers and 6018 men.

In 1814 the "Artillerists" and the two regiments of Artillery were combined into a "Corps of Artillery," leaving the Regiment of Light Artillery as a separate unit. In 1821 all of this Artillery and the ordnance personnel were reorganized into four regiments of nine companies each, and thus continued with only minor changes, for over forty years.

The 5th Regiment of Artillery was authorized in 1861, and during the Civil War the total authorized strength was 273 officers and 4666 men. After the Civil War the authorized strength was reduced, and in 1885 the Artillery consisted of five regiments, comprising sixty company organizations, with a personnel of 280 officers and 2600 men.

During the period 1812-1885, the functions of the Artillery were many and varied. In the War of 1812 the four existing regiments were actively engaged as artillery or as infantry, the latter rôle predominating. In the Mexican War forty-five of the total forty-eight companies took active part, again playing the double rôle of artillery and infantry. During the Civil War fifty-six of the then existing sixty companies served

as light batteries. Prior to the Civil War, forty-one companies served in campaigns against the Indians, and after the war some of the "foot batteries" took part in operations against Indians.

In 1886, through the instrumentality of the Endicott board, the War Department undertook the task of reorganizing the U. S. coast defenses. In 1898, as a war measure, Congress authorized the Sixth and Seventh Regiments of Artillery and tripled the strength of the personnel in all regiments for the duration of the war. The batteries of Light Artillery, however, still formed part of the regiments of Heavy Artillery, now committed almost entirely to coast defense, for only two types of armament existed, the light field pieces and the heavy guns in the fixed defenses.

During the Spanish-American War a number of the foot batteries were organized into Siege Artillery, and two of them participated as such at the siege of Santiago. Two batteries served as infantry at the siege and capture of Manila. Later on four batteries served as infantry during the Philippine Insurrection in 1899.

The 6th Artillery served as infantry during the Philippine Insurrection, and four batteries of the 3d Artillery served as infantry in the China Relief Expedition in 1900, in addition to the light batteries which played their own rôle on this memorable trip. At various times companies or batteries of Heavy Artillery (or later Coast Artillery) have served as infantry in Alaska, Hawaii, and on the Mexican border and on strike duty during industrial troubles.

In 1901 the Artillery was reorganized as a corps consisting of 126 companies of Coast Artillery and 30 batteries of Field Artillery, with authorized strength of 663 officers and 18,922 men.

The Coast companies were then grouped under higher command in accordance with the territorial departments of the United States and their own stations along the seaboard, while the Field Artillery batteries were grouped in battalions at the large inland posts of the mobile Army and in contact with either Infantry or Cavalry. Here was a well defined divergence between the assumed missions of the light batteries and of the Heavy Artillery companies, the former being grouped with units of Infantry and Cavalry while the latter became identified with the seacoast and were considered immobile because their guns were in fixed defenses and for attack against naval targets only. The reorganization also provided for a chief of Artillery.

This was the first provision by Congress for a technical chief of any combatant arm in the Regular Army since the beginning of Government under the Constitution (the Corps of Engineers had not been rated as a combatant service up to that time). General Henry Knox had been Chief of Artillery under Washington in the Continental Army and

General Henry J. Hunt was Chief of Artillery of the Army of the Potomac during the Civil War, but neither of them was of the Regular establishment.

In 1907 the Coast and Field were definitely separated into two distinct branches of the military service. Both branches were increased and the Coast Artillery Corps was constituted as of 170 companies with an authorized personnel of 708 officers and 19,321 men. It thus became a service apart from the mobile Army in all matters tactical and technical and retained its administrative relationship only.

In 1916, in the National Defense Act, the Coast Artillery received a fifty per cent increase, which was to be added by five equal increments during a period of four years. The previous fixed company organization was eliminated and only the total corps strength of personnel in each grade was defined. However, in April, 1917, when only the first increment of increase had been added, we were in the World War; the remaining four increments were added *en masse*, and we were confronted with the necessity for an immediate expansion to ten and later to twenty times our previous military strength.

In June, 1917, the War Department authorized the formation of the first Expeditionary Brigade of Coast Artillery troops intended to operate heavy mobile guns abroad, this brigade arriving at Mailly-le-Camp (Aube), France, by the end of September, which camp became the headquarters of the American Railway Artillery Reserve. In February, 1918, the first units of this brigade were disposed to support certain operations of the French 4th Army in Champagne. From that time on the units of this Artillery Reserve operated along the battle line in France until finally, in October and November, 1918, they were concentrated in support of the American First and Second Armies in the vicinity of Verdun.

When the enormous expansion required of the Field Artillery to supply the necessary divisional guns alone was fully realized, the War Department assigned to the Coast Artillery the task of supplying all the Army and Antiaircraft Artillery for the A. E. F., while in the matter of Corps Artillery and Trench Mortars the personnel was drawn from both Field and Coast Artillery sources.

For the Army Artillery, all of which was to be tractor drawn or transported, the sources of armament supply were the French 155-mm. G. P. F. guns, the British 8-inch and 9.2-inch howitzers and the 5-inch and 6-inch guns dismounted from the U. S. Coast Defenses and placed upon provisional wheeled mounts.

The matter of primary importance to the Coast Artillery Corps after the war was what types, calibers, and proportional numbers of heavy mobile Artillery should be retained in the Regular establishment

when the new reorganization had become a fact. Before the war we had only Field Artillery and a fixed sea coast armament and nothing in between these widely separated types.

The Coast Artillery and the Field Artillery had been far apart in both technique and *esprit*—medium and heavy mobile calibers had been lacking as well as any inclination in either branch of the service to push .heir development.

Fortunately during the war, due to the absence of enemy sea power, the Coast Artillery was able to emerge from its narrow rôle of coast defense and fill the pressing need for heavy mobile guns in support of our armies on the land. More than this, it was shown that not only can Coast Artillery troops operate their sea coast weapons on fixed mounts and their heavy mobile armament in support of land forces with the same methods of accuracy and precision of fire, but also that the newly developed heavy mobile types of guns themselves can play a double rôle and can attack, with equal accuracy, targets on the sea as well as on the land.

At the date of the Armistice the manufacture of heavy artillery in the U. S. had just reached quantity production and as a result of completing those contracts to which expensive materials and forgings were already wholly committed, the War Department is today in possession of a heavy mobile armament such as never before existed in this country and which now forms an asset of the greatest value against future National danger.

The American Railway Artillery in France had used only French materiel, and this was left behind, but the troops returned to find a better armament at home, of improved design and undamaged by the wear and tear of war.

The Army Artillery had used French guns and British howitzers, purchased from these countries with all their equipment. A small portion of this armament was expended in action, some of it was returned to the governments from which obtained in the final settlement of accounts, but the larger numbers were brought to this country to form a part of the Army Artillery armament since accumulated.

Our Army has today in fully developed and efficient form those quotas of medium mobile guns which the Army of 1916 wholly lacked. The Coast Artillery has become in reality the Heavy Artillery of our military establishment and coast defense pure and simple is only a part of its mission. It has extended its scope so as to close entirely the gap that formerly existed between the light or Field Artillery and the Artillery of the fixed defenses, and it is prepared to go into campaign in support of field armies just as readily as to defend our fortified posts.

The National Defense Act of 1916, which had increased the strength of the Coast Artillery Corps approximately fifty per cent and fixed that strength at 1200 officers and 30,009 enlisted men, was intended to provide, when the five annual increments of the increase were completed, a full manning detail for all guns and mine defenses in overseas possessions, a full manning detail for mine defenses and a half manning detail for our defenses at home.

The Act of Congress of June 4, 1920, does not increase this strength, in spite of the fact that the Coast Artillery now contributes three brigades comprising ten regiments of Heavy Mobile Artillery, to the strength of the mobile Army. But this matter is of small importance as compared with the actual existence of the organizations and the armament of the heavy mobile units so long previously absent from our regular establishment.

Heavy artillery is the most expensive part of the equipment which our Army requires for successful campaign against a modern national enemy. It is at the same time the longest in production, for it cannot be improvised on short notice but entails a continuing process of development and actual practical tests so that when emergency overtakes us, we may have available the best types of these heavy weapons.

But the question of heavy mobile guns was not the only matter to be developed by the Coast Artillery during the World War. Prior to 1917 we had made no practical progress in the line of antiaircraft defense. The subject has been discussed and the need partly visualized but no more. Therefore along with the matter of heavy mobile guns the problem of Antiaircraft Artillery and methods of fire was assigned to the Coast Artillery Corps. The service of antiaircraft weapons even with the Allied armies in France in 1917 was still in the experimental stage—light field guns had been modified and placed upon various types of mounts permitting all-round fire and high angles of elevation, but the need for improvement was still great, particularly in the matter of telescopic sights and accurate mechanisms for tracking and offsetting on the target. One must realize that shooting at aircraft is exactly similar to shooting birds on the wing, with the added disadvantage of greatly increased and only roughly determined ranges and the complication of time-fused ammunition.

Thus the Antiaircraft Artillery organized and sent to France from Coast Artillery sources was destined to struggle for accomplishment in what was to them a wholly new field. The developments up to that time had shown that the adapted 75-mm. or 3-inch rifles were of insufficient power to meet all the demands and a heavier and more powerful gun must be designed.

The first hasty American effort produced a crude so-called semi-fixed mount to carry the ordinary 75-mm. field piece, with recuperator modified to take care of recoil at high angles, equipped only with open sights and very poor means for corrections and offsets. These guns and mounts were however only a stop gap and they were hurried overseas to guard the most important points in rear of our lines from the Main Regulating station up to the forward ammunition and supply dumps. Practical tests and a close view of the problems involved soon showed our officers what was required to improve the design and construction of both gun and mount and what the accessories should be for rapid and accurate shooting. Production at home was promptly started along the right lines and many satisfactory antiaircraft guns, though not of any longer caliber than 3-inch, finally arrived in France before the end of hostilities.

Although the need for an antiaircraft gun of heavier caliber than 3-inch had been recognized before we started operations in France, the Allies themselves had not yet produced one and were still experimenting so that in this matter we were on practically new ground. Our 4.7-inch rifle was found to fill the requirements as to weight of projectile, muzzle velocity, and bursting charge, it was already designed, and therefore the production of a satisfactory mount, giving all-round fire and elevation up to 80 degrees, was the task at hand. This the Ordnance Department has accomplished with satisfactory results, and although time was not available to produce this gun and mount before the war ended the effort has resulted in giving us a reserve of this heavier weapon in addition to the many hundreds of mobile 3-inch guns and mounts produced during hostilities.

The future of aerial warfare and of antiaircraft weapons cannot be safely foretold; we are only at the beginning of it, but it is evident beyond any doubt that we must in the future provide an able antiaircraft defense for all large centers of population along or near our coasts and for all important fleet bases in order to prevent enemy observation and, so far as possible, enemy bombardment from the air and to avoid the necessity of tying our own air forces to the defense of any given point. This is exactly the same situation as exists in the matter of gun defense of important coast points against enemy naval attack, namely, that we must not tie our fleet to the defense of its own bases but defend that base from the shore and leave the fleet free to operate offensively against the enemy wherever he may be found.

One has only to think of the many important centers along our Atlantic coast to realize how extensive the necessary antiaircraft defense of only a part of this country may have to be in future war.

Colonel and Brevet Major General George W. Getty
Commandant Artillery School March 1, 1877-October 2, 1883

EDITORIALS

The Education of an Officer

THE military education of an officer in the Army begins with the receipt of his first commission, or even earlier, and continues, essentially without interruption, until he doffs permanently the uniform of his country. That he should be a student to the very end of his career is essential, for, as he climbs the ladder of military hierarchy, his duties change, his responsibilities enlarge, and his field expands. The details of his earlier days are, one by one, transferred to other and younger officers, and he slowly, perhaps laboriously, advances to a higher command.

During the long years of his service the officer, of necessity, reads and studies a tremendous number of books on military and technical subjects. In the schools he attends, in his recurring periods as a teacher, in the routine of his daily duties, books are everywhere thrust upon him. Regulations and manuals and text books and reference works and technical volumes, almost without end, virtually surround him. It is with hesitation that one suggests that he voluntarily add more books to his already long list, and yet, since most of us seem to require a stimulus to study, such a suggestion appears necessary.

The reading normally required of an officer to enable him to keep abreast of his routine duties and of the requirements of his special and general service schools is restricted almost entirely to the field of military science and its technical application. He may make occasional slight excursions into the field of military art, but these are infrequent and unordered. Following a natural tendency, he postpones the study of military art until he reaches his high command or, perhaps, enters the War College. It is then too late to take up the subject in a logical, well-ordered manner. The best he can hope to do is to consider, in a limited and probably hurried fashion, a few of the many phases of military art.

Military science, unlike military art, begins with the minutiæ of military service. Its foundation is laid in the smallest of details. Drill of the soldier without arms lays the way for instruction in tactics; routine duties in company supply introduce the subject of logistics; and the details of company and garrison duty constitute a preliminary training in technic. From these basic details the system gradually

broadens and gathers together the various phases of military science until they all unite to form the field of combined tactics, wherein the officer completes his training in the use of the tools—men, animals, and materiel—with which he is furnished for the purpose of waging war.

At this stage the officer is primarily a technician. He has acquired skill in the employment of his tools and he has the grounding in science that will enable him to use his tools to best advantage. He can maneuver his troops, he can lead them to combat, he can even fight battles; but not yet can he wage wars or conduct campaigns. His education is unbalanced. He is in the position of the musician who has developed his technic but who has not studied composition, or of the painter who has learned the application of paint to canvas but does not yet know how to conceive a complete picture. He is not yet an artist.

All great military leaders were, first and foremost, great artists. Many were also great technicians, but it is as unnecessary for a military commander to attend to all the details of technic as it is for an artist himself to paint all the details of a large picture. In both the result is derived from their artistic ability to conceive the complete picture. Without imagination, without a creative instinct, they would not have been artists; and without artistry they would not have been great.

The study of strategy, one may say, following logically upon the study of combined tactics and so taught in our system, will furnish the deficit, will complete the education. But will it? Strategy is merely the medium through which the military leader expresses his creative ability—the paint of the artist. Back of it is a long course of study. The painter must study pictures and their setting, their spirit, and their theme. He must know the careers of other painters, and he must learn the secrets of their success. Similarly, the military leader must study wars and campaigns, and from them derive an understanding of the principles of war. He must learn how and with what success other military leaders applied these principles that he too may become successful.

Unlike military science, military art rests on the broadest of foundations—upon the history of the whole world. Long before we take up the study of strategy we should pave the way with history, for it is from history that the principles of strategy are derived. Passing quickly from world history and pausing briefly on the history of a few of the most successful nations, we soon reach military history. As we progress, our studies become more and more detailed, and thus, from wars, we are enabled to derive the principles of war. The field now narrows to the study of campaigns, wherein the application of the principles of war may be illustrated and whence the details of strategy are learned,

after which battles may be taken up from a strategical viewpoint. All through military art, the personal equation is a factor of greatest importance and can best be studied in the lives of individual leaders. At this stage, if ever, the technician becomes an artist; but there still remains the perfection of his education, its rounding out in fine points. In military geography, military biology, economics of war, international relations, causes and consequences of war, he can keep occupied to the very end of his career.

If, then, an officer is to so arrange his studies that strategy is to follow naturally upon combined tactics, he must begin military art early in his military life. Military art and military science must run parallel for a time, and for the most part research in military art will have to be voluntary and in addition to the pressure of routine studies and duties. Only so will an officer enable himself to develop to the fullest extent his capacity to lead armies in the field.

All great military leaders were close students of military history, but all students of military history did not become great leaders. So it will be with us. Some of us will remain technicians to the end, for not everyone can become an artist. Nevertheless, all can improve upon whatever ability they may possess, and at the very least one can develop an appreciation of artistry, which in itself is far from futile.

A Futile Search for American Militarism

Pacifists who like to scold the American government for alleged excessive attention to military preparedness are effectively answered by a federal department which is qualified to render impartial testimony. In his speech at the annual meeting of the National Association of Postmasters, held in Kansas City, Postmaster General New has said: "The number of postal employees in America exceeds by more than 100,000 the combined forces of the army, the navy and the marine corps. Yet some people say we are a militaristic, war-like nation."

This is a striking comparison which reveals the relation of present-day national defense to other activities of the federal government. The postoffice department could be matched, man for man, with the entire regular army, the navy and the marine corps, and nearly one-third of the postal workers would remain as the margin of leadership which the mail service holds over the continuous national defense service.

It is proper enough to warn any nation of the evils of militarism, but any American who accuses his country of actual inclination toward militarism might as well put on the paper armor of a Don Quixote and go forth for a tilt with windmills. The evidence of real militarism in the United States simply does not exist.—*Des Moines Capital.*

Information for Pacifists

Persistent propagators of pacifist propaganda will find little to commend in a recent speech delivered by James W. Gerard, former Ambassador to Germany. Likewise some of his friends among Democratic party leaders scarcely will feel grateful to him for his tariff utterances at this time—statements which are in direct variance with their views on the subject of the tariff.

"The only way the United States of America can defeat the hatred of European nations toward us is to maintain the strongest fleet, army, and air force in the world," said Mr. Gerard.

"Europe is boiling. Europeans feel that we are economically rich, that they are kept out of this country and can't sell their goods here, hence they hate us, as was evidenced in the proposal of the League of Nations Council at Geneva that the League have power to act against commercial supremacy, a direct slap at the United States.

"Germany took advantage of her fall in currency to put all her large industrial plants in order, and is now ready for producing goods on a large-scale capacity, greater than any other nation. A high tariff is the only protection the United States has as an offset, for if it is lowered the high-waged American worker will meet the direct competition of the low-waged German.

"As a Democrat, I think it is impossible to change the present tariff."

Partisanism should not be altogether decried, but common sense should be a prime party virtue. Mr. Gerard here employs common sense. His party organs recently have been making much capital out of certain utterances credited to President Coolidge with reference to airplane armament. The President was made to appear both foolish and inconsistent. But the point is that Mr. Gerard, a Democrat, emphasizes the fact that this country cannot permit foreign nations to form our standards of defense. A good part of the press of the American Eastern seaboard appears to think otherwise, but will learn, sooner or later, that this is a big country, with a considerable part of its patriotism and intelligence existing outside of New York.

Adequate military preparedness and a tariff that will protect the American working man is sane American policy.—*Cincinnati Enquirer.*

PROFESSIONAL NOTES

Burning Out Filled Projectiles

By Dr. Col. Michael Kostevitch

I. SHELLES FILLED WITH LYDDITE AND TNT

(From 9.2-inch to 4.5-inch Calibers)

Under-Ground Layout

Preparation of shells for burning.—1. Remove plug and brass bushing, if any. 2. Remove millboard washer by means of copper tool. 3. Remove resin or pitch from surface of filling, using copper tool. 4. Clean surface of filling with a brush. 5. Remove batiste discs from millboard gaine tube, if any. 6. If picric powder exploders are fitted, remove them; if TNT exploders, let them remain.

NOTES

a. 60–Pdrs.—1. If the shell has a long central cavity, fitted with a long exploder of picric powder, do not burn out the shells on these instructions. 2. If shells are fitted with TNT exploder bags with loop (one or two bags) and trotyl pellets, or trotyl in blocks around the exploder, these can remain, but Gaine N2 (sometimes delay gaine) with adapter N2 and bushing, if any, must be removed. Picric powder exploders must always be removed. (C. E. exploders are not as a rule used with Lyddite-filled shells, but should any of these be found they must be removed.) 3. Some shells have a cavity in the filling and have no exploders. They can be burned without any difficulty. 4. Some 60–pdr. lyddite shells are designed for block filling; they have a separate head secured by a set screw. In this case the shell is to be taken into a cubicle and the gaine, with exploder and the head of shell, removed. The shell will then be inverted and block filling removed. If the filling does not drop out easily, the shell may be tapped with a wooden mallet. If block filling cannot be removed by this means, burn out the shell. Block charges should be sent in a wooden box to the burning ground.

b. 18–Pdrs.—All rules given above must be observed where they may apply to this type of shell (ordinarily block charge). 18–pdr. lyddite block charges can usually be very easily removed. Occasionally they will fall out, or they may be removed by means of a piece of tapered wood. If they cannot be withdrawn by this means, the shells should be placed in a tank of hot water for a few minutes until the varnish on the inside of shell is melted; the charge can then be easily withdrawn (the water must not enter the shell). If not, send to the burning ground to be burned in the usual way. Obviously it is necessary to remove the paper collar and leather-board packing.

c. 6–inch Gun.—Leather-board washer and brass bushing to be removed before the burning-out process.

d. Q. F. Common Lyddite 3–Pdr., Mk. V.—Asbestos paper to be removed before burning out.

e. Lyddite Common 12– and 14–Pdr., Mk. II.—Leather-board washer, brass bushing and disc of white cardboard to be removed.

ARRANGEMENTS FOR BURNING

a. A series of holes in a direct line are made on the special burning ground (Figs. 1 and 2). *b.* The number of direct lines of holes will be governed by the size of the burning ground. *c.* The minimum distance between each hole must be not less than 7.5 metres, measured from center to center. *d.* Dig holes so that the worker may stand away from the shell to prepare the process for each burning. *e.* Dimensions of holes must be as follows: ten feet deep; minor axis, 2 feet 6 inches; major axis, 4 feet 6 inches. Maximum width of top of hole: minor axis,

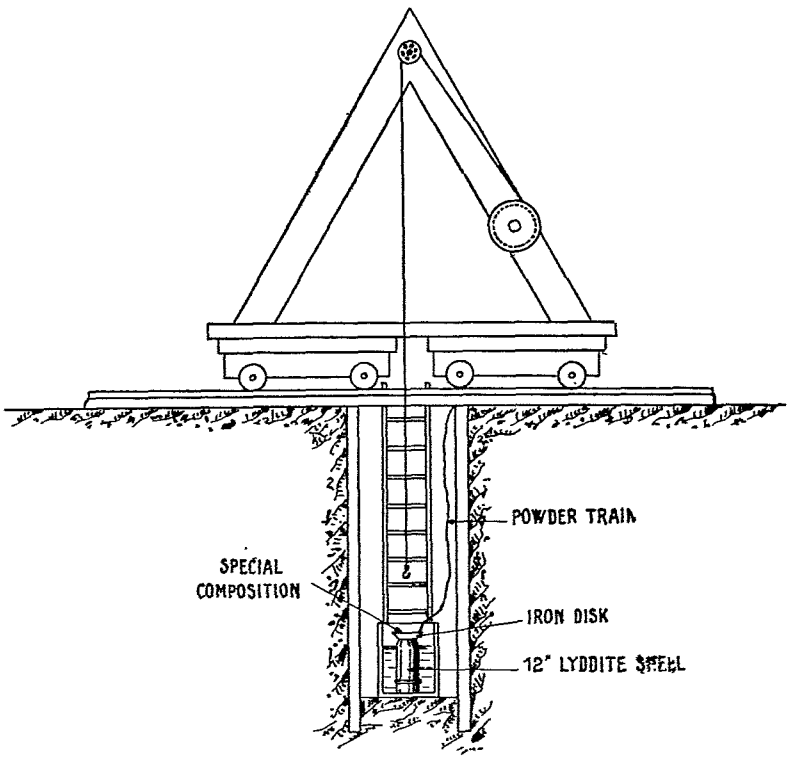

FIG. 1. UNDER-GROUND LAYOUT FOR BURNING OUT LYDDITE SHELLS

3 feet; major axis 5 feet. At the bottom of hole a little sump must be made to collect water (Fig. 3). *f.* The holes must be lined with corrugated iron sheet lapped 1 foot 6 inches. *g.* On top of the hole, running with the minor axis, a Decauville railway for lowering and raising the shells by means of a small crane fixed on a trolley. *h.* A ladder is provided, fitted with hooks to fix on one rail of the Decauville line in such a manner that the ladder will not move when the workmen are entering or leaving the hole. If the ladder is constructed of wood, it must be removed before burning is commenced. *i.* The shell must be placed in a tank of water in the hole. The height of the water in the tank must be not less than four-fifths the height of the shell. The diameter of the tank must be at least twice the diameter of the shell. If it be desired to burn out, in the hole for 9.2-inch shell, shells of smaller caliber, the following conditions are necessary: (1) The

total amount of high explosive contained in the shells of smaller calibers must not exceed the quantity of explosive in one 9.2-inch H. E. shell for one hole. (2) Between each shell of the smaller calibers there must be a space of at least two inches in order to allow the water to circulate. (3) The limits for each hole are as follows: One 9-2-inch, three 6-inch, five 60-pdrs., or seven 4.5-inch; place over the mouth of the shell a piece of sheet iron with a hole cut in the center to fit closely over the nose of the shell in such a manner that it will stop the overflow of sludge during the burning. The composition of the sludge, if possible, should be 80 parts of TNT or Amatol sludge and 20 parts of Ground Flare composition (by weight). If this is not available, ordinary dry TNT or Amatol sludge can be

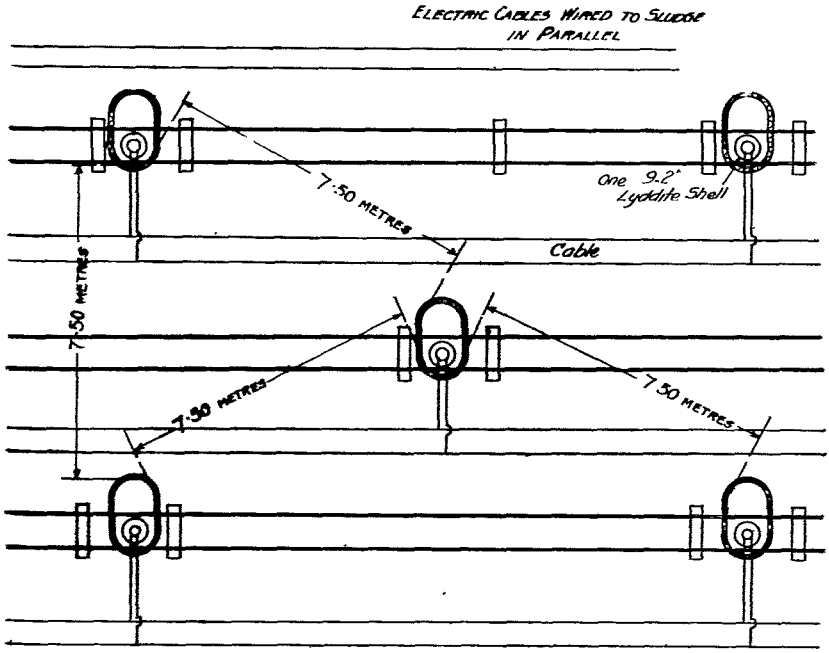

Fig. 2

used, but there must be no lumps in the sludge. The capacity of sludge to be used for one 9-2-inch shell will be approximately one pound. *k.* Place the sludge on the sheet iron around the nose of shell and also inside the plug hole of the shell on the surface of the H. E. On top of the sludge place a quantity of smokeless powder or cordite. This will be ignited as follows: An electric fuze is first put into a small shalloon bag of black powder (½ oz.) fixed to the brass cap of thsi fuze by means of a piece of string. This bag should be tied in the center of a small bundle of cordite (above and below the brass cap). It is necessary to have the sticks of cordite all touching around the bag of black powder and electric fuze. After this the fuze should be joined to a cable connected to an electric exploder (see Fig. 4). *l.* The burning must be carried on only when the water in the tank is cold. *m.* After burning is completed the shell must be removed from the hole and washed to remove any carbon. and must be then inspected by means of an electric lamp. *n.* No one is permitted on the burning ground while the

burning is in progress, and the exploder is connected to the cable by the foreman after everybody else is clear.

Special Precautions.—a. The composition 80/20 to be prepared as prescribed; if too much Ground Flare composition is used it will cause a "choke" in the mouth of the shell, and will not ignite in most cases; but if it ignites, there will not be sufficient outlet for the flame and gas, whereby it could cause "burning" to become "detonation" in view of the "slag" existing. *b.* The sludge to be put in the mouth of the shells in any case must not be pressed down, but put in lightly. *c.* After the shell has been burning for one and a half hours (9.2-inch) the burn-

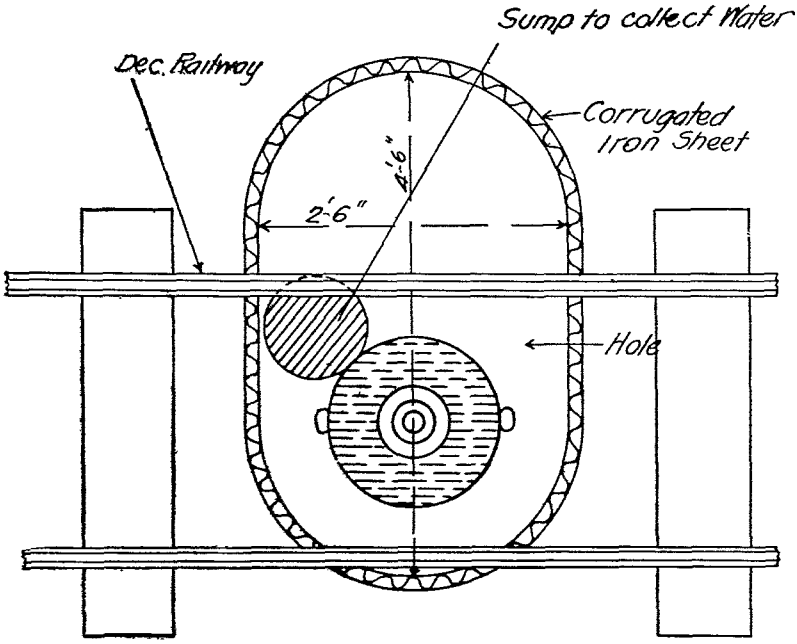

FIG. 3

ing ground may be approached (4, 5-inch, 40 minutes; 6-inch, 1 hour; 8-inch, 1.25 hours). *d.* If the shell has not been ignited, the mouth of shell should be cleaned out and the process repeated.

Note on Picric Powder.—Very hygroscopic and when moistened is useless as detonator for picric acid; when ignited unconfined it burns slowly with black smoke; when confined it detonates; useless as detonator for TNT (and Amatol). This powder is a mixture of ammonium picrate and saltpeter. Ammonium picrate itself does not explode when heated in the ordinary way.

UPPER-GROUND LAYOUT

Figures 5 and 6 show quite clearly the arrangements and corresponding dimensions. When the electrical cable is absent the ordinary train of cordite may simply be used; all other arrangements, as have been already stated, must be strictly carried out. For instance, when someone, not liking to carry out our rules, placed the shells in the holes without tanks filled with water, an explosion occurred at once as shown in Figs. 7 and 8.

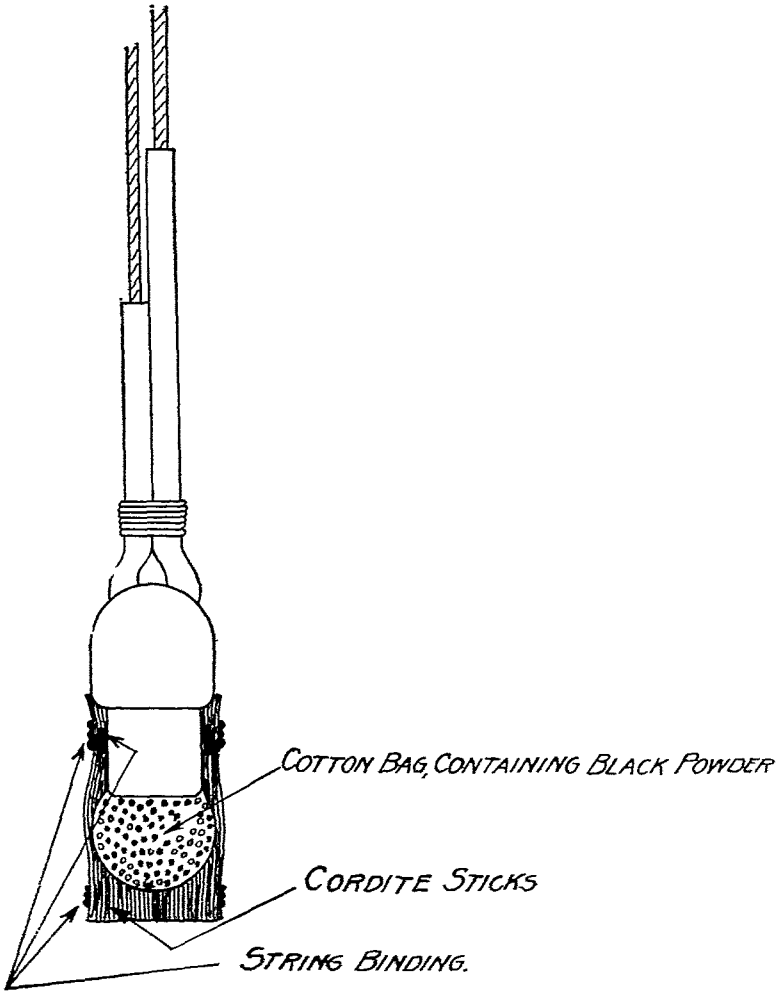

FUZE, ELECTRIC No 14. MARK III SCALE APPROX 1/1

SHEWING ADDITIONAL MATERIAL FOR LIGHTING SLUDGE

FIG. 4

II. SHELLS FILLED WITH AMATOL
(9.2-inch and smaller)

NOTE.—No artificial mounds will be needed, except a small traverse between each pile of 20 filled shells (9.2-inch).

The Layout.—The layout is as follows: 1. Trench: width, 1 meter; depth, 50 cm. 2. On each side of the trench, one pile of 9.2-inch shells, the total not exceeding ten in number (*e. g.*, two rows of five each). 3. Between each pile a

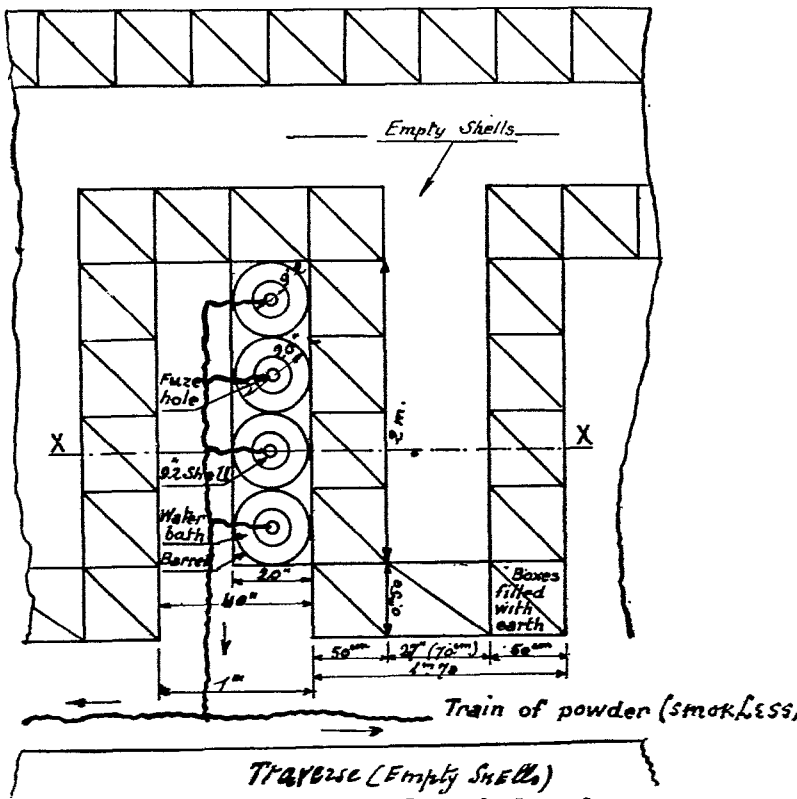

FIG. 5. UPPER-GROUND LAYOUT FOR BURNING OUT LYDDITE SHELLS

traverse which must be 50 cm. high above the shells and the width at this point to be one meter; the top of this small traverse to be 50 cm. wide (see Figs. 9 and 10).

Explosive Limit.—The following maximum number of shells for one trench allowed on each side: 9.2-inch, 10 shells; 8-inch, 16; 6-inch, 40; 60-pdr., 60; 4.5-inch, 80; 3-inch, 220; 18-pdr., 350; 13-pdr., 600. The maximum quantity of H. E. allowed in one trench at one time is 360 lbs.

Method of burning is the same as method for burning of the Gas shells.

Special Precautions.—*a.* Do not mix shells filled with Amatol with shells of TNT during the burning operations. *b.* On no account may Lyddite shells be burned out in the same piles or near shells filled with Amatol or TNT.

III. BLUE CROSS GAS SHELLS

The following method was used in France at Pickett et Fils Breaking Down Factories during the years 1920-1923 without any accident and invented by me when on duty as Chief Safety Inspector at this Company. The method was in due time improved by the French General Inspection of Ammunition and consists in the following—the Burning Ground being sufficiently far away from factories, shops, and lodgings.

The Burning Ground must be prepared as follows: Trenches, 30 cm deep, 60 cm. wide at the bottom and 90 cm. at the top, by 14 meters long, must be dug out and a layer of lime 4 cm. thick placed at the bottom of the trench before each burning. 77-mm. shells (after the fuze has been unscrewed and shell plugged with conical wooden plug) after arrival at the Burning Ground are placed close together at an angle of 10 degrees on the edge of the trench, four rows of shells

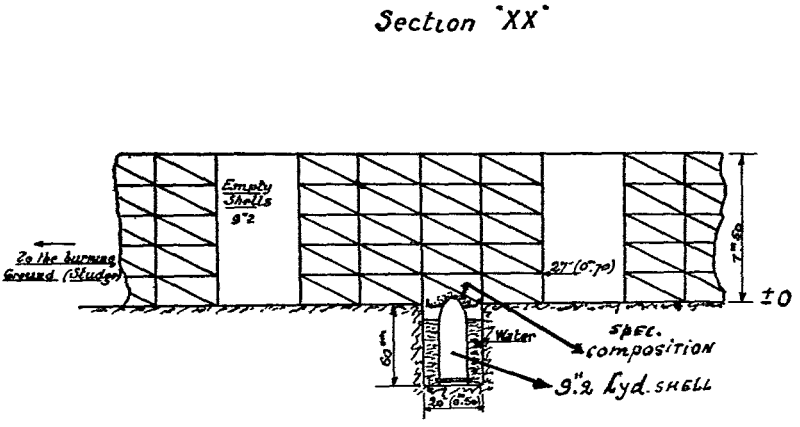

FIG. 6

superposed. The mouths of the shells must be on the same straight line. 105 and 150-mm. shells must be placed in the same manner, but apart from one another, the distance between each shell two calibers in order to avoid sympathetic explosions. There must in this case be only one row of projectiles.

The trench afterwards is filled with firewood which should pass at least one meter beyond the end of the row of shells, the height of wood being twice that of the heap of shells. The residue from washing out shells, as well as some quantity of powdered picric acid, should be sprinkled on the wood in sufficient quantity to keep the fire "going." The fire must be lit by means of a trail of at least five meters of safety fuze. Immediately before the firewood is placed in the trench, the plugs are taken out of the shells and placed in special boxes outside the trench. The foreman and his assistants, before lighting the Bickford Cord, must ascertain that everybody has left the Burning Ground. The fire must be lighted in such a way as to have the wood burning against the wind. The foreman should then withdraw at once. As a rule the burning of shell must not begin before all work in the factory has finished. Although burning operations do not last over two hours, nobody should approach the B. G. until work starts the next day.

The next morning, when arriving at the B. G., the representatives of the "Empty Shells Inspection Department" must, after having put on special gloves,

masks, etc., ascertain that the contents of each shell have been destroyed by the fire and that the shell is empty. In the event of a shell not being empty, or a bottle not being broken, these should be plugged and put aside for the next burning operation on the same day. After all empty shells have been removed, the trenches must be thoroughly cleaned, and unburnt explosives, if any, (that is, extremely rarely), picked up and placed in a wooden box with lid and destroyed next morning on the B. G.

The gas in the 21-cm. long Blue Cross Gas Shell is contained in a corrugated steel canister. In consequence, some gas may remain in the container after the first burning. To insure complete dissipation, the gas shells in question must be

FIG. 7. 9.2-INCH LYDDITE-FILLED SHELLS IN CUBICLE
Explosion caused by absence of tanks filled with water

subjected to a special process of burning which must be repeated eight times, as practice has shown. The procedure is as follows: after the first burning and before any shell in trench is handled, the Blue Cross Shells in that trench must be lightly plugged. For the special burning, place 21-cm. shells, one on each side of a 25-cm. German minnie, so that the heat from the minnies and from the fire will heat the contents of the gas shells. The plugs must be removed every time a shell is subjected to burning and replaced again after each burning. There may be noted some special precautions as follows: shells found to be leaking will be plugged with a wooden plug (after defuzing), placed in a box containing chloride of lime, which will be lidded down and sent to the B. G. Only when everything is ready for burning, may the leaking shells be unplugged and placed in the end of the trench to be burned out. But if any fuzed shell is found to be leaking, it must be conveyed to the Demolition Ground and blown up. Gas masks, as well as other special clothing must always be in full order.

IV. NOTE

Our personal inventions mentioned above were introduced in France in 1921 and confirmed by the French General Inspection of Ammunition of War Office for MM. F. N. Pickett et Fils' War Ammunition Breaking Down and Explosives and Gas Recovery Factories in France and Belgium (12 factories). Towards the end of 1920, being Chief Safety Inspector of that firm, we received an order from the General Superintendent to invent a system for clearing the shells from explosives without washing out, as metal (steel, copper, etc.) was badly needed to send to England for commercial purposes. At the same time France was most eager to liberate her northern provinces, within the shortest possible time, of an enormous amount of very dangerous shells, grenades, airbombs, mines, etc. I

FIG. 8. 9-2-INCH LYDDITE-FILLED SHELLS IN CUBICLE
Explosion caused by absence of tanks filled with water

devoted a sufficient amount of time to physico-chemical calculations to make me perfectly sure (with strictly precise conditions) of the possibility of burning out some of the explosives without an explosion taking place during the burning of an explosive inside the shells. Basing myself upon this I planned a scheme called the "Under-Ground Layout for the Burning of Lyddite Shells."

The French General Inspection of Ammunition, as well as the French Technical Ordnance Committee, were very skeptical concerning my invention and offer, and experiments at three different Pickett Factories with different calibers of shells were required to convince them of the possibility and safety of that process. After some favorable experiments my system was introduced in all factories on April 27, 1921, and when thousands of lyddite shells of various calibers were thus in my way freed from picric acid without any explosion at all, I worked out sketches

and built by them the "Upper-Ground Layout for Burning out Lyddite Shells," which was also approved and introduced on June 29, 1921.

Lastly the problem of the burning out of Amatol-filled shells arose before me, and this question has also been successfully gone over point by point, and the method has been approved and introduced, practically by order of the same French General Inspection of Ammunition, in all Pickett et Fills Factories on September 21, 1921. I also introduced my special rules for burning out Ammonal

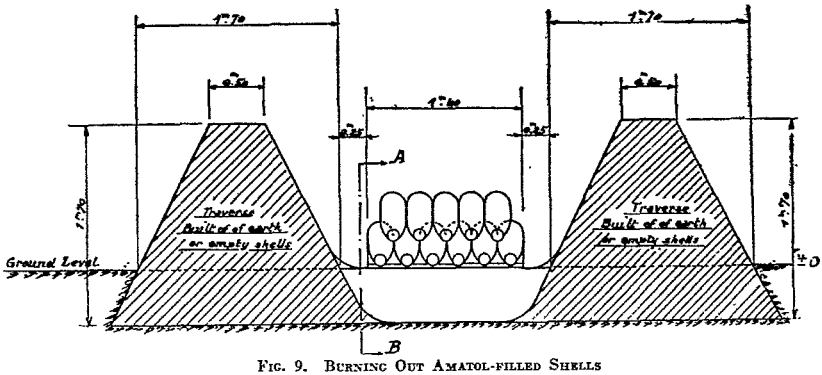

Fig. 9. Burning Out Amatol-filled Shells

shells, grenades, mines, airbombs, etc., filled with different kinds of explosives. These I am unable to deal with in a short article.

From this chronological description one can see what important work was performed and carried effect most successfully in France. French specialists greeted my work sympathetically and heartily. One wrote me, for instance, as

Section AB

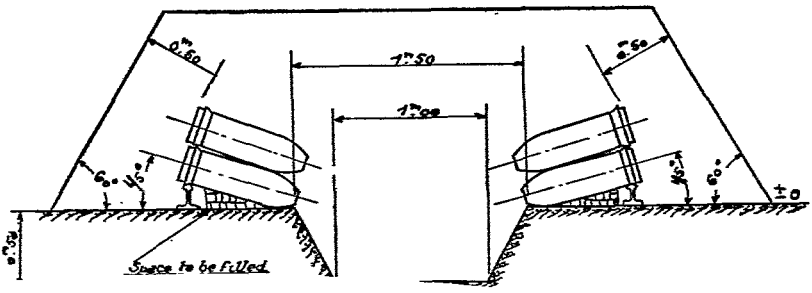

Fig. 10

follows: *"J'ai la confiance pour cela dans votre nouvelle méthode de brulage. J'espère bientôt voir le rendement grâce à ce procédé."* (Aug. 17, 1921.) In England, however, when I went there personally to the authorities, I was less successful in introducing my processes.

In 1922, under the title, *Methods for the Safe Burning Out of Lyddite and Other Shells,* I described the different breaking down processes applicable to

more than 90% of the ammunition of the different nations. I considered that this work of mine should greatly help Ordnance authorities of different States in case of the necessity of burning out the explosives, and also having in view humanity. Many lives have already been lost in recent years in handling explosives. It must never be forgotten that "explosive is always explosive"; that to deal with this kind of matter it is necessary to study explosives, to know their potential energies, and never to be under the command of explosives in the least.

R. O. T. C. Graduates Appointed

To date 4842 graduates of the 1926 school year from institutions having reserve officers' training corps units have been appointed in the officers' reserve corps. By branches these appointments are as follows: Infantry, 2105; cavalry, 197; field artillery, 570; coast artillery corps, 366; air corps, 80; corps of engineers, 400; signal corps, 115; quartermaster corps, 2; ordnance department, 144; chemical warfare service, 15; medical corps, 601; dental corps, 217; veterinary corps, 30. Graduates of schools located in the 7th Corps Area, comprising the states of Missouri, Kansas, Arkansas, Iowa, Nebraska, Minnesota, and North and South Dakota, head the list of appointments by corps areas with 857. The 4th Corps Area, of North and South Carolina, Georgia, Florida, Alabama, Tennessee, Mississippi, and Louisiana, is second with 831. The 3d Corps Area, of Pennsylvania, Maryland, Virginia, and the District of Columbia, is third with 694. The other corps areas have approximately the same number from each. From Hawaii 15 graduates have been appointed, all in the infantry.—*Army and Navy Register.*

Pacific Coast Antiaircraft Artillery

Battery "B," 63d Coast Artillery (Antiaircraft), from Fort Winfield Scott, California, apparently established a world record in night target practice when firing 3-inch antiaircraft guns at towed sleeve targets. The battery, commanded by Captain William C. Braly, 63d C. A. (AA), fired seventy-seven shots in a minute and one-half at sleeve target moving 90 miles per hour. The records show the small sleeve was in the danger zone of 25 of the bursting shells, and there were more than 300 holes in the sleeve made by the shrapnel shells as they exploded in the air. This number of holes is unprecedented and established what is believed to be a world's record. The target was two miles from the battery and approximately one mile in the sky.

519th Coast Artillery Reserve

Officers of the 519th Coast Artillery Reserve (Antiaircraft) firing their first antiaircraft machine gun practice at moving aerial targets at Camp McQuade, Calif., recently scored 113 hits using only four guns. The 519th Coast Artillery Reserve is a Los Angeles and San Diego unit associated for training with the 63d Coast Artillery (Antiaircraft), San Francisco's Sky Defense Regiment. In one firing, Captain Arens, 519th C. A., of Los Angeles, commanded the battery which made 56 hits per battery per minute on a sleeve target moving 80 miles per hour at an average range of 700 yards and an average elevation of 700 feet.—*Army and Navy Journal.*

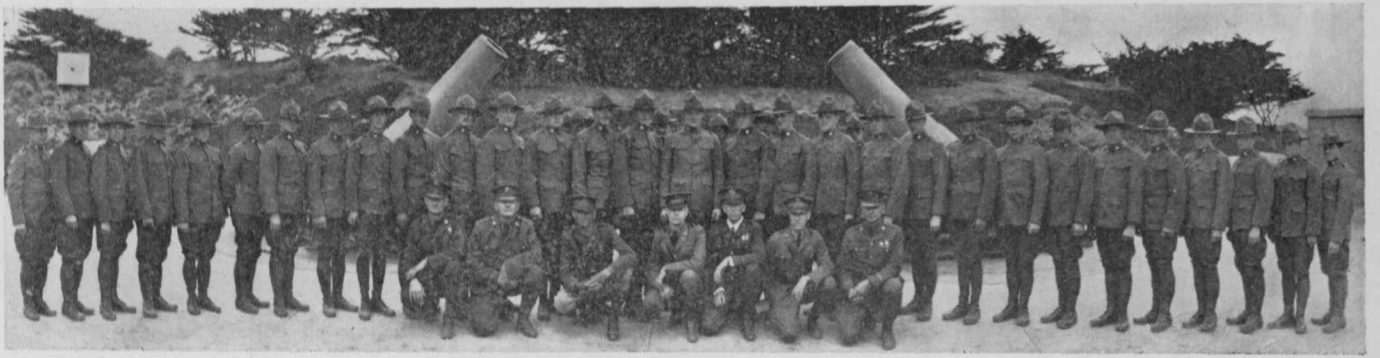

The Fort Funston R. O. T. C. Coast Artillery Camp

The R. O. T. C. Coast Artillery Camp for the Ninth Corps Area was held at Fort Funston, California, this year for the first time. Thirty-three students were in attendance from the Universities of California and Washington and the Agriculture College of Utah, while the Massachussetts Institute of Technology and the University of Michigan each added a representative.

One battery was organized and fired practices at moving targets with the 12-inch mortars and the 155-mm. guns. Due to limited numbers, but one gun could be manned after a range section had been organized. Antiaircraft instruction was brought to its conclusion with firing at a sleeve target on each of two successive days, the second practice being thoroughly satisfactory as regards both rate and effect of fire.

Small arms instruction with rifle and pistol took up much of the remaining time on the schedule.

Wednesday and Saturday afternoon trips broke the camp routine. Being situated adjacent to the country's largest outdoor pool, swimming led in sports interest. The Hastings Sports Shop Tennis Cup was won by Ralph H. McClarren, U. of W., from a field that included two-thirds of the camp enrollment.

The Sixth Coast Artillery (HD)

The Coat of Arms of the 6th Coast Artillery was approved by the War Department on May 3, 1924, and its blazonry is—

Shield: Parti per pairle argent (silver), azure (blue) and gules (red), in chief a mullet of six points of the last (red) and in fess debased two fleur-de-lys or (gold).

Crest: On a wreath of the colors (silver and red) a grizzly bear passant sable (black) langued gules (red).

Motto: Certo Dirigo Ictu (I aim with a sure blow).

The 6th Regiment of Artillery was organized with headquarters at Fort McHenry, Md., in March, 1898. As originally organized the regiment contained twelve batteries lettered from A to M. Later in 1899 two additional batteries, "N" and "O," were added. In 1924 all these batteries were consolidated in the 6th Coast Artillery, except Batteries "D" and "G," which were transferred to the Field Artillery in 1901 and are today C of the 1st and E of the 5th Field Artillery, and N which is the Service Battery, 65th Coast Artillery.

In May, 1899, all the batteries arrived in Manila, Philippine Islands, with the exception of Batteries I and K which were sent to Honolulu. A detachment of Battery L, now Battery D, 6th Coast Artillery, was engaged with the Insurgents at Lingayen on November 6, 1899, and in the vicinity of Marivelles on March 23, 1901; Battery A at Mt. Samat on March 27, 1901; Battery E at Montalban on December 27, 1899, near Binang on January 6, 1900, at Antigue on January 18, 1900, near San Pablo on January 21, 1900, at Patnongon and Caritan on February 15 and at Marivelles in April, 1901. The regiment returned to the United States in October, 1901, and the batteries from Honolulu in 1904.

During the World War, Batteries B and K of the 6th Coast Artillery served in France as Batteries C and B, 1st Antiaircraft Battalion, and were engaged in the St. Mihiel and Meuse-Argonne operations from September 12 to November 11, 1918. Batteries A, I, and H were part of the 40th Artillery, C. A. C., which did not serve overseas during this conflict.

The shield of the coat of arms consists of the flag of the Philippine Insurgents (except the stars and sun of Katipunan which are omitted) and shows the first campaign of the regiment. In chief is a six-pointed mullet (rowel of a spur) taken from the device omitted, to show the engagements of the several batteries; it is red for war and also of the color of the artillery. The fleur-de-lys denote the war history of the two organizations that saw service in France.

The crest is taken from that of the Coast Defenses of San Francisco, where most of the units were stationed after 1901, and where the new 6th Coast Artillery was organized and is stationed today. The motto—Certo Dirigo Ictu (I aim with a sure blow) is indicative of the character of the bear.

The crest and motto on a red scroll in metal and enamel is worn by the personnel of the organization as its distinctive regimental badge.

The change of designation of the units of the 6th Coast Artillery is as follows:

Headquarters Battery: organized in 1899 as Battery O, 6th Regiment of Artillery; 71st Company, Coast Artillery, in 1901; 1st Company, Fort Casey, Wash., in 1916; 9th Company, Coast Defenses of Puget Sound, in 1917; 71st Company, Coast Artillery Corps, in 1922; and Headquarters Battery, 6th Coast Artillery, in 1924.

Battery A, 6th Coast Artillery; organized in 1898 as Battery A, 6th Regiment of Artillery; 60th Company, Coast Artillery, in 1901; 2d Company, Fort Winfield

Scott, Calif., in 1916; 2d Company, Coast Defenses of San Francisco, in 1917; Battery A, 40th Artillery, Coast Artillery Corps, in 1918; 2d Company, Coast Defenses of San Francisco, in December, 1918; 60th Company, Coast Artillery Corps, in 1922; Battery A, 6th Coast Artillery, in 1924.

Battery B, 6th Coast Artillery: organized in 1898 as Battery B, 6th Regiment of Artillery; 61st Company, Coast Artillery, in 1901; 2d Company, Fort Baker, Calif., in 1916; 11th Company, Coast Defenses of San Francisco, in 1917; Battery C, 1st Antiaircraft Battalion, in 1917; 11th Company, Coast Defenses of San Francisco, in 1919; 61st Company, Coast Artillery Corps, in 1922; Battery B, 6th Coast Artillery, in 1924.

Battery C, 6th Coast Artillery: organized in 1898 as Battery C, 6th Regiment of Artillery; 62d Company, Coast Artillery, in 1901; 2d Company, Fort Worden, Wash., in 1916; 2d Company, Coast Defenses of Puget Sound, in 1917; 62d Company, Coast Artillery Corps, in 1922; Battery C, 6th Coast Artillery, in 1924.

Battery D, 6th Coast Artillery: organized in 1898 at Battery L, 6th Regiment of Artillery; 68th Company, Coast Artillery, in 1901; 1st Company, Fort Kamehameha, H. T., in 1916; 1st Company, Coast Defenses of Oahu, in 1917; 1st Company, Coast Defenses of Pearl Harbor, in 1921; 68th Company, Coast Artillery Corps, in 1922; Battery D, 6th Coast Artillery, in 1924.

Battery E, 6th Coast Artillery: organized in 1898 as Battery E, 6th Regiment of Artillery; 63d Company, Coast Artillery, in 1901; 3d Company, Fort Worden, Wash., in 1916; 3d Company, Coast Defenses of Puget Sound, in 1917; 63d Company, Coast Artillery Corps, in 1922; Battery E, 6th Coast Artillery, in 1924.

Battery F, 6th Coast Artillery: organized in 1898 as Battery F, 6th Regiment of Artillery; 64th Company, Coast Artillery, in 1901; 8th Company, Fort Winfield Scott, Calif., in 1916; 8th Compony, Coast Defenses of San Francisco, in 1917; 64th Company, Coast Artillery Corps, in 1922; Battery F, 6th Coast Artillery, in 1924.

Battery G, 6th Coast Artillery: organized in 1898 as Battery M, 6th Regiment of Artillery; 69th Company, Coast Artillery, in 1901; 4th Company, Fort Monroe, Va., in 1916; 4th Company, Coast Defenses of Chesapeake Bay, in 1917; 69th Company, Coast Artillery Corps, in 1922; Battery G, 6th Coast Artillery, in 1924.

Battery H, 6th Coast Artillery: organized in 1898 as Battery H, 6th Regiment of Artillery; 65th Company, Coast Artillery, in 1901; 6th Company, Fort Winfield Scott, Calif., in 1916; 6th Company, Coast Defenses of San Francisco, in 1917; Battery C, 40th Artillery, Coast Artillery Corps, in 1918; 6th Company, Coast Defenses of San Francisco, in December, 1918; 65th Coast Artillery Corps, in 1922; ~~Battery~~ H, 6th Coast Artillery, in 1924.

Battery I, 6th Coast Artillery: organized in 1898 as Battery I, 6th Regiment of Artillery; 66th Company, Coast Artillery, in 1901; 1st Company, Fort Barry, Calif., in 1916; 15th Company, Coast Defenses of San Francisco, in 1917; Battery D, 40th Artillery, Coast Artillery Corps, in 1918; 15th Company, Coast Defenses of San Francisco, in December, 1918; 66th Company, Coast Artillery Corps, in 1922; Battery I, 6th Coast Artillery, in 1924.

Battery K, 6th Coast Artillery: organized in 1898 as Battery K, 6th Regiment of Artillery; 67th Company, Coast Artillery, in 1901; 10th Company, Fort Winfield Scott, Calif., in 1916; 10th Company, Coast Defenses of San Francisco, in 1917; Battery B, 1st Antiaircraft Battalion, in 1917; 10th Company, Coast Defenses of San Francisco, in 1919; 67th Company, Coast Artillery Corps, in 1922; Battery K, 6th Coast Artillery, in 1924.

Battery "Stephen D. Lee" at the Mississippi Agricultural and Mechanical College

In order to carry out the program for the Coast Artillery Unit of the Reserve Officers' Training Corps at the Mississippi Agricultural and Mechanical College, it was considered advisable to provide some scheme of instruction that would cover, as near as possible, the work required of a Reserve officer of the Coast Artillery under combat conditions. To do this there have been developed three miniature ranges, simulating a 10-inch seacoast rifle, a 12-inch seacoast mortar, and a 155-mm. G. P. F. battery. However, only the "Water Battery Layout" will be described.

A 10-inch Seacoast Battery Located on an Artificial Pond.—In the beginning, a model plotting room was installed in one of the academic buildings. This plotting room has a Whistler-Hearn plotting board, Pratt range board, deflection boards for both mortar and gun, an improvised spotting board of the Gray type,

Plotting Room

an improvised range prediction board, wind component indicator, the necessary telephones, time-interval bell apparatus, storage battery, switchboard, and motor generator set. The above materiel was either furnished by the government according to authorized tables of allowances or was made by the commissioned and enlisted personnel on duty at the institution from materiel at hand.

About a quarter of a mile from this plotting room is a small artificial pond constructed to furnish a water supply for the boilers of the college power plant. This pond offered excellent possibilities for the field of fire.

The base line was next installed on the bank of this pond, the scale being one yard on the pond to represent one hundred yards on the plotting board. This made a 40-yard base line 4000 yards long. The pier mounts for the base end stations were constructed from old pipe on hand and set up. The gun was then located in the center of and on the base line, the college authorities building a small house with concrete floor to cover the gun and to house other equipment when not in use.

The Gun.—The gun used is an old .22-caliber rifle mounted on the carriage of a Warner-Swazey depression position finder, in the place of the telescope.

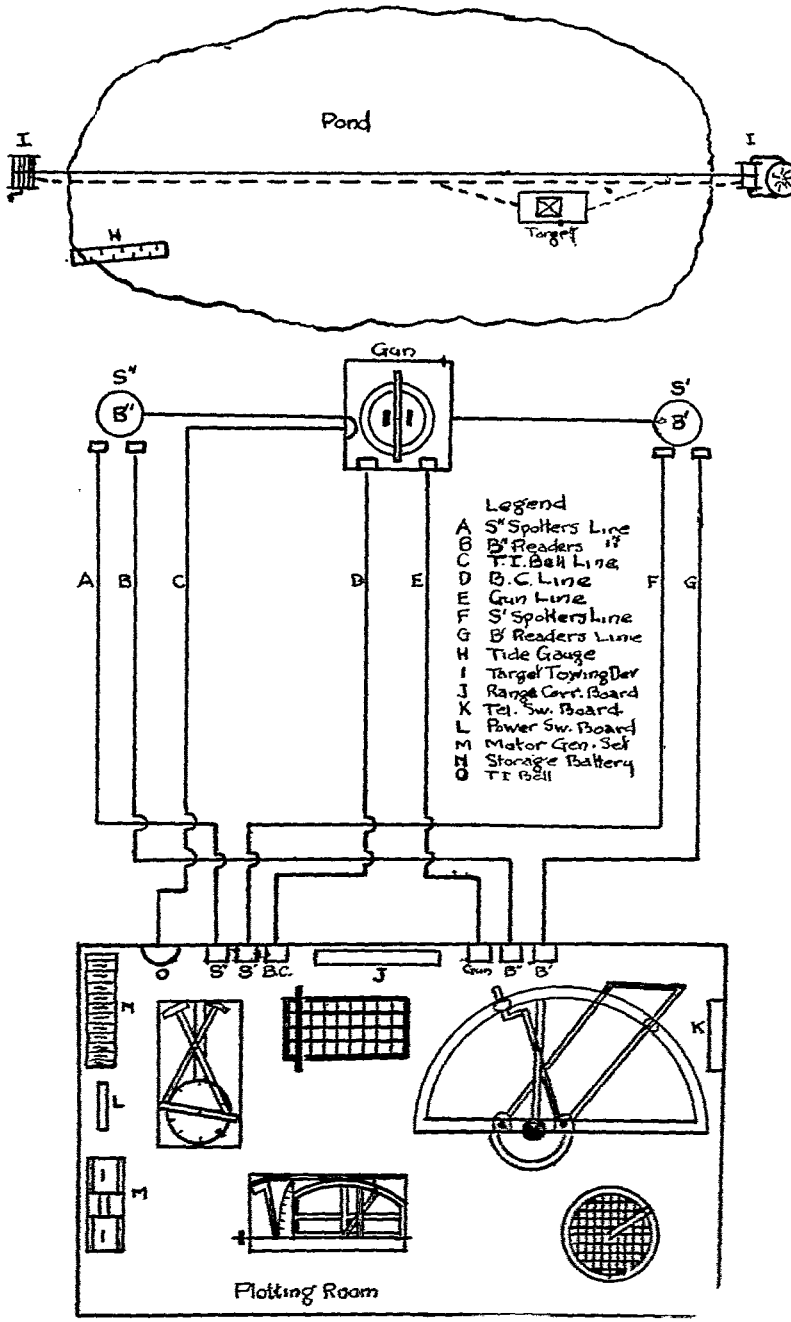

Diagram of Battery Stephen D. Lee

It was necessary to improvise a range scale, as the one on the drum would not respond. One was drawn, blueprinted and pasted on the drum, and has given efficient service. Six telephones were installed, two to each observing instrument and a gun data phone at the gun. One time-interval bell only was installed in a box on the outside of the house covering the gun as it can be heard at both

B″

observing stations as well as by the gun crew. On account of the limited number of observing instruments and telephones available, the observers do the spotting. Separate stations for spotting would be better if materiel permitted. The mechanical work necessary to mount the gun was done by Captain Ernest L. Lucas, Ordnance-Reserve, a professor of mechanical engineering at this institution, who helped in every possible way. Care was taken in setting up the mount for the depression position finder used as the gun carriage to orient its azimuth circle

with the base line so that it could be used correctly to lay the gun in direction for indirect fire.

The Target.—On one side of the pond, a pole was erected to which a large pulley was fastened. On the other side of the pond, a home-made windlass was set up. Ordinary outside twisted pair was reeved through the pulley around the windlass making an endless belt of wire which sagged down under the surface of the water. Had the wires remained above the water, they would be cut by bullets. A small pyramidal target was then constructed to scale and tied to the splice of the wire belt with a rope long enough to permit the target to float properly. To produce the moving floating target effect, a student is equipped with a watch with a conspicious second hand and instructed to turn the windlass so many revolutions per minute.

TARGET AND TOWING DEVICE

The Sight.—A Scott sight has been clamped to the Depression Position Finder for use in laying the gun in direction in Case II.

Tide Scale.—The pond, like most rivers and oceans, due to varying rainfall and other causes, rarely has the same height of tide. It was therefore necessary to install a tide scale. The normal was taken at 2′.0 and readings made possible from 0.′0 to 4.′8. At the beginning of every drill the height of tide is read and telephoned to the plotting room.

Chart for Range Board.—A chart for the range board was constructed with corrections for tide, wind, atmosphere, and velocity. Nine hundred is taken as the normal velocity, with curves from 800 to 1000. Sixteen is normal for atmosphere with curves from 0 to 32. Fifty is the normal for the wind with curves from 0 to 100.

Changes in Deflection Board.—A drift scale and range-time scale were improvised on a sheet of tin and used on the deflection board.

It can now readily be seen that all that is necessary to simulate the actual conditions of a seacoast fire adjustment problem is to man the equipment described

above, assign the target, and give the command "Track." The only equipment used in this installation, not in the authorized table of allowances, is—

1 Warner-Swazey Depression Position Finder.

1 Sight, Model 1898.

This installation permits the training of R. O. T. C. students in all phases of seacoast firing, with the exception of the actual gun drill, and develops a proficiency in range sections that we have never seen approached by any other method when time is considered as a factor.

The name "Stephen D. Lee."—As mentioned above, this institution has three simulated batteries. To inculcate morale, each battery has been given the name of some of the institution's illustrious dead. In the World War alone this college gave the Army 5966 men, the Navy 325, and the Marine Corps 271, a total of 6562.

B" and Gun House

Eighty-six men gave their lives, 456 were wounded in action, and 172 were disabled from gas, disease, and accidents. One hundred and thirty-one A. and M. men won American citations. Fifty-five A. and M. men won foreign citations. What a job to choose that one outstanding military hero to honor by giving his name to one of the batteries of his Alma Mater! But the Board made no mistake in naming the Seacoast Battery for Lieutenant General Stephen Dill Lee, the outstanding Artilleryman of General Lee's army as the below quoted order will show.

HEADQUARTERS RESERVE OFFICERS TRAINING CORPS
MISSISSIPPI A. AND M. COLLEGE

Office of the Professor of Military Science and Tactics
A. and M. College, Miss.
March 18, 1926

R. O. T. C. }
Orders }

31. The Coast Artillery Battery at this institution is hereby designated as *Battery Stephen D. Lee*, in honor of the first President of the Mississippi Agricultural and Mechanical College.

Stephen Dill Lee was born in Charleston, S. C., September 22, 1833, graduated at the United States Military Academy in 1854, served six years

on the western frontier in the Fourth Artillery and then against the Indians in Florida. Foreseeing the War of Secession, he resigned from the United States Army and was appointed Captain in the Confederate Army. From the surrender of Sumter in 1861 to Johnston's surrender in 1865, he served with ability in every department—artillery, cavalry, infantry—in Virginia, Mississippi, Georgia, and Tennessee and was promoted on merit successively through every grade of military rank from captain to lieutenant general.

At the close of the Civil War, General Lee made Columbus, Mississippi, his home. Twelve years of his life were passed here as a planter, practically and unconsciously preparing himself for his work as an industrial educator.

He served as the first president of this institution from 1880 to May 1, 1899. He was one of the first southerners to advocate industrial education. He believed that a student's education was not complete without a course in military science and discipline. He laid great stress upon the teaching of better methods in agriculture to young men and the dissemination of helpful knowledge through bulletins and institutes to our farmers. He taught the need and dignity of labor, especially skilled labor. He insisted on clearness, thoroughness, and readiness or "snap," in his students and instructors.

One of his successors here said of him, "The success of this college and the good it is to do in the years to come will be due, more than to anything else, to the splendid foundation work done by General Stephen D. Lee, its first President."

General Lee died at Vicksburg, Mississippi, May 28, 1908, "beloved by every man, woman, and child in Dixie Land where he left the impress of his strong personality."

R. E. GRINSTEAD,
Lieutenant Colonel, U. S. A., Retired,
Professor of Military Science and Tactics.

Approved
B. M. WALKER, *President*

Foreign Publications

THE ARTILLERY OF THE PAST, PRESENT AND FUTURE.—A writer in the *Militär-Wochenblatt* of May 4, 1926, gives a brief notice of a recently published work under the foregoing title written by General Herr of the French Army which, the writer states, has been translated into German by Colonel Hirsch of the German Army.

The writer congratulates the German artillery service for having this work available in translation and says that the significance of the work is such that knowledge of its contents is a service duty for the artillerist, and allusion is again made to it in order to direct the attention of other arms of the service to it. Part I or the book gives the strength and tactics of the French and German artillery at the beginning of the war and proceeds with a continued discussion of war operations on the west front and the lessons to be derived therefrom, and the measures to be taken by the artillery in respect to increased strength, organization, firing methods, and efficiency of fire. Part II treats of artillery and its use in tactical problems; the attributes that its material must possess; its use, organization, and leadership direction. In Part III reference is made to the artillery required in peace time, its technical studies, industrial mobilization, organization as a function of mobilization, and its training. Part IV presents what has been achieved in France and other countries since the war in the domain of artillery. While the work covers all essential technical artillery questions the book is written in such language that, while treating of strictly and purely artillery technique, it is readily understood by the non-professional artilleryman.

General Herr has succeeded in bringing the conditions of supreme efficiency of the artillery into the distinctly incised formula: *surprise, mass* and *depth*. These conditions were frequently capable of fulfillment in the war of position. They are more difficult in the war of movement and much yet remains to be accomplished by the artillery. With our (German) weak artillery the concentration into mass is of special significance, but the measures indispensable for artillery with that purpose in view will always require time, even after improvement of combination in movements and battery aiming practices, together with utilization of proper plans and simplifications of computations and firing tactics are achieved. We artillerymen will hope that the other arms will, by reading this work, be impressed with desire for correction of their fundamental principles and will gladly concede to the artillery the time necessary for carrying out those purposes and give it due consideration. By that means the important mental association between leader and artillery and infantry and artillery will be aided.

There is as yet no German book covering the activities of the German artillery during the war. Here it is presented to us by the best equipped man among our opponents and it is the proud satisfaction of the German artillerist to deduce from his description that the German artillery was always "on post" that it was able to adapt itself to the demands made upon it by war conditions and that its measures usually took precedence over those of the French. This book also does away with many erroneous views, for instance of those of the inferiority of German light artillery in respect to range at the beginning of the war.

FRENCH ARMY WORRIES.—From articles written by "Lucius Cincinnatus" and published in the February 25 and April 25 issues of the *Militär-Wochenblatt* it is evident that the worries of the general staff and other officers of our military establishment who are charged with preparing, bringing before and putting through the legislative branches of our government projects and measures affecting the army, are trivial when compared with those imposed upon officers of the French Army who are charged with similar duties.

It appears that early in the present calendar year extensive plans for reorganization of the French Army were submitted to the chamber of deputies. They were intended to cover measures for establishing the units that were to compose the different arms of the service of the army organization and provide laws and rules for their instruction and training and, more particularly, to fix the relations between the home and colonial forces and their relative strength and armament. Among the measures proposed were reduction of time of service of enlisted men under the colors from eighteen months to one year and incidentally intensifying methods of training and drill by relieving the men from all work not pertaining directly to their military duties and shifting some at least of the "fatigue" work now required of soldiers to civilian employees.

The measures proposed were clearly stated and generally accepted as indispensably necessary not only for the improvement but for the very existence of a modern military establishment. But securing for them serious attention even by the legislative branch of the government, to say nothing of their approval and enactment, has met with so much obstruction and delay that nothing definite and decisive has yet been done. The reasons for this delay are stated by the German writer to be due in part to the parliamentary difficulties incident to securing attention of legislative factions to a matter involving complicated details of organization, but mainly to the frequent and almost continuous cabinet changes.

General Girot, the chairman of the military commission in the chamber of deputies gives expression to some of these difficulties when he says that it has been impossible for him to bring the most important proposed military laws up for fair discussion and disposition when there came up a new war minister in every fortnight; that to reach a conclusion regarding laws for the government of the army and contentment to the officers and noncommissioned officers demands repose and stability; that the army, which was apparently a very simple organization was, in reality, made up of thousands of details not one of which could be neglected or overlooked. How could progress be expected when there came into office every month a new minister with his own plans who knew nothing of the projects of his predecessor? Girot says he has received the project of General Nolet and then the first project of Painlevé, then the project of Daladier, again the second project of Painlevé. All of them contain something that is good, but where there came tomorrow the project "X" and on the day after tomorrow the project "Y" and so on, it was impossible to know what to do with all the stuff. Should the army commission go ahead on its own hook without consulting the general staff or the war minister for the time being? But the army is entitled to have its condition clearly set forth and its demands seriously considered.

Continual change of ministry, the writer contends, is not a manifestation of modern conditions but a development of the parliamentary system. There were forty-one changes of ministry from the time when Gambetta was relieved in 1871 up to 1913. There were frequently three or four changes in a single year.

General Girot's predecessor as chairman of the army commission, Lieut. Colonel Fabry, mentions a number of the special worries that are oppressing the French Army. First comes the energetic assertion that the army is going to perdition because the statement that France's security was founded on its armed forces was not sufficient, since one must not forget that those forces must also have arms. That the army needs above all and at once a law regulating cadres and their effective strength, if the use of an instrument available to unscrupulous hands for disaffection and violence is to be avoided.

Officers in the United States Army who are on active duty with skeleton organizations and units of troops will readily sympathize with Colonel Fabry in his survey of existing conditions of the French Army when he brings out facts due in part to attempts to keep up an establishment of thirty-two active divisions notwithstanding the demands made upon the home forces for colonial service (Morocco, Syria) and occupational troops in Germany. In every French regiment, he says, "the bare bones protrude through the skin" rendering proficient training impossible. Infantry regiments of ostensibly 1776 men have 564; artillery regiments of 705 men have 246; a cavalry regiment of 764 men has actually 205; and in the tank regiment of 750 men there are 254." Additional mournful dirges are heard not only from the utterances of Colonel Fabry but from many other sources, in regard to the disagreeable living conditions of officers and noncommissioned officers and their families, where compensations are inadequate to provide for decent quarters and subsistence. The families of many married noncommissioned officers are quartered in barracks with only a thin door partition between them and the men's barrack rooms.

Excerpts from the French press, taken at large, indicate much interest in proposed measures for reorganization of the French Army throughout the country. It is, however, remarkable that nothing is being said by the press, as far as is known, about reduction of armaments in connection with any proposed changes of organizations.

CHARACTERISTICS OF GENERAL FOCH.—In the June 11, 1926, number of the *Militär-Wochenblatt* a German writer, Dr. von Rieben, Counselor of Records and Lieut. Colonel in the former German army, describes some of the characteristics of General Foch whose merits and services, he intimates, have not been fully appreciated and valued as they deserve when compared with those of other high military leaders of the entente forces. The following extracts from this writer's article may be of interest:

There is less known of any of the French higher army leaders than of General Foch. France has without doubt exhibited a high feeling of gratitude to its generals. The French book market is replete with biographies, large and small volumes and pamphlets, presenting to the people the significent qualities of their leaders but Foch is comparatively in the background. It is only incidentally that one meets with an expression of judgment or report throwing light on the peculiar status of this man with whom France's fate in the World War was combined more closely than with any other man. He was of course fortunate. Fortunate above all in being assigned to supreme leadership shortly before our breakdown. But his preponderating force of will raises him above the circle of his associated leaders and in the very first years of the war we find and recognize him as our most dangerous opponent there where a great crisis of the French Army appeared to place victory in our hands. We will dispense with reference to the battle of the Marne.

We encounter him the next time at Arras. . . . It was the day in which, as is reported by an eye witness, the spectre of Sedan appeared in sight of the French forces enclosed in Arras. Orders were prepared at the local army headquarters at Aubigny at 9:00 A. M. to abandon Arras. They were despatched to the X Army Corps at 9:10 A. M. The chief of staff was engaged in preparing similar instructions to the provisionary corps at 9:30 A. M. It was exactly 10:00 A. M. when General de Maud'huy and Lieutenant Colonel Valliers were bent over a map and brooding over the abandonment of Arras and the retreat of the army, when an auto stopped before the door of the small house in Aubigny and General Foch pushed his way into the room like a blast from a storm. Standing upon the threshhold and looking about he took in the situation at once and spreading his arms he exclaimed: "Maud'huy I embrace you for what you have done and for all that you will do. *Understand me, for all that you will yet do.*" Then, with a significent gesture he said: "*Get out,*" and we withdrew precipitately to an adjoining room leaving him alone with Maud'huy and Lieut. Col. Vallières. It was not necessary for us to listen closely to learn what was going on. The entire building at time reflected the discussion: "I don't want to hear anything, do you understand. I am deaf. . . . I know of only three ways of fighting, *attack, defense, running away.* The last I forbid. Take your choice of the other two." . . . And at 11:00 A. M., when I delivered a telephone message from General Joffre to Maud'huy, saying: "Bravo! Go ahead like that," Lieut. Col. Vallières was sending two messengers to the X Corps and the provisionary corps recalling the order to withdraw and directing them to hold their ground under all circumstances and instead of retreating the army must advance to the attack. France was saved, the retreat to Abbeville or Calais was avoided.

What had General Foch brought with him or promised? I don't know, but I do know that he aided us by his arrival at that critical moment in recovering a situation that had already been given over.

Barely four weeks later we came to the contest at Ypres. Foch was, since October 14, "commandant du group des armees du Nord." As such he disposed locally only of the Eighth Army between Dixmude and Zinnebeck. He could, keeping contact with the English and Belgiums, act only in cooperation with them. From the beginning of operations in Flanders Foch was "actively engaged, like a young staff officer," in running from headquarters to headquarters, listening but for himself replying with peculiarly short but effective words and stating the true situation clearly, whether

favorable or unfavorable, in a way that neither the young king of the Belgians nor the English Marshal could resent. On October 31, 1914, the English line at Gheluvert was broken. Marshal French, on the way at 2:00 P. M. to Sir Douglas Haig, had to force his way on foot through the retreating masses. Two division commanders had fallen. The situation seemed desperate. Withdrawal was decided upon. French came back to Ypres to look up Foch at Cassel. An orderly officer stationed outside the headquarters building of the Eighth Army recognized the English Marshal and reported to him that a conference between Foch, D'Urbal, and the commanding general of the IX Corps was then under way. Marshal French came with set purpose to retreat. After the English Marshal had given expression to his views, doubts and worries and seemed about to yield to Foch's opinion, the latter, having been challenged to do so, wrote with clear plain script a version on a sheet of paper which, it is hoped will some time be made public—*recto et verso.* The Marshal took it, glanced over it, and contented himself with an endorsement on the back and sending the original manuscript to General Haig with instructions to carry out Foch's measures! All this from the French officer Madelin, the eye witness before referred to. But the substance of events as related by him is confirmed by the records of the English general staff which contains an order from French, dated 3:35 P. M., to which there is attached a memorandum from Foch of 3:05 P. M. The last paragraph of this memorandum is: "It is a conclusive necessity that there be no retirement and that for this reason every one should dig in at the position he has reached."

On October 31, 1914, French says: "*Never was England standing nearer a precipice than on this day.*"

"It owes its deliverance to Foch. His order stands between our success and the ultimate victory," concludes the German writer.

THE POLONIZATION OF FRANCE.—In an article published in the *Militär-Wochenblatt* of July 18, 1926, Dr. Buttersack, a Surgeon General in the former German Army, writes:

The threads of fate are interwoven in a manner incomprehensible to our understanding. Upbuilding and exhaustion repeat themselves in the life of a nation as in that of an individual. Whether the observer recognizes distinctly the one or the other of these processes depends upon his intelligence of outlook. There are people who look with timorous admiration upon France's great military power and declare: nothing can be done against it. They fail to see the processes of disintegration and the renewal of layers in the French national body. Neither the most powerful tanks nor the greatest display of flying squadrons can remove from the world the fact that the French people are approaching extinction with giant strides. In the decennium 1770-1780 there were 380 births to 10,000 population; today there are about 100. The curve has continued with uninterrupted downward depression for 150 years. De La Ponge has been justified in his assertion, made in 1887: *la natalité de la France ne se relevera pas.*

The far-seeing politician will, in consequence, follow up the process to see which races are interpreting the nationality. The psyche of the future of the French nation will be adjusted to that. The Italians naturally stand at the head in this respect and are followed closely by the Poles whose number now present is set by experts at one-half million and is constantly being increased by new immigration (estimated at 50,000 per annum) and by births. Since births of immigrants are increasing in round numbers thirteen times as fast as those from the native born, the Poles, with their well-known fecundity, are the principal contributers to the increase.

The tendency of political aspirations and also economic necessity have led to a systematic and also officially regulated recruitment of foreigners for agricul-

ture and coal mining. This recruitment attracts most decidedly all those who are discounted in their "redeemed" home lands and who are allured by the prospect of becoming full fledged French citizens within five years.

Frederick the Great described most strikingly how movingly and pathetically the French can appeal when they need help and the freedom with which they treat the friend and helper when he has fulfilled his task. Thus the Poles are baited with all kinds of promises: full protection by French laws as they are enjoyed by the French people themselves, admission to all special privileges allowed to persons of other nationalities, claims for Polish interpreters, the use of the Polish language in judicial transactions and participation in all existing provisions in France for social welfare such as hospitalization, invalid assistance, care for dependents, etc. The Poles may establish consumers' associations and banks; for sixty-five children the state provides Polish schools with Polish teachers, and such like.

But in spite of all this the Poles are not becoming contented in their new homes. Dying France is making desperate efforts against the intruders. This manifests itself instinctively in the so called "belittling formalities" of the bureaucracy. For this reason many Poles are inclined to leave la Belle France. Fortunate are those who succeeded in getting a hold in Westphalia. For the majority—those too poor to raise the funds to enable them to return home—there remains only the foreign legion: there are already large Polish cemeteries in Morocco.

Meanwhile, much of the sacrifices incident to modern migration of nations may be deplored, the advance march of the Slav toward Western Europe goes on. Even though La Ponge gave expression to the sentiment: "the best we can hope for is that our children will defend the ground of their fathers against the peaceful intrusion of our neighbors," there is today no longer any room for hope. An expert mathematical genius might be able to calculate today the time when France shall have become a Slav-Mongol-Negroid state. But with that its mental constitutions would also be changed. What will the new France of the future do with the enormous military equipment? Surely the Chinese general Su Tai (320 B. C.) was right when he said: "Where the powers of a nation are exhausted long walls and great defensive works may well afford an adequate frontier protection."

General von Zwehl.—The *Militär-Wochenblatt* of June 4, 1926, announces the decease of General von Zwehl of the former German Army who died on May 26, 1926, in the seventy-fifth year of his age.

General von Zwehl was, at the beginning of the World War, in command of the German VII Reserve Corps. He rendered distinguished service on the German side throughout the entire period of the war. Among special actions to his credit are the taking by assault the fortified position at Maubeuge on September 7, 1914, and by a forced march closing the gap between the I and II German Armies in their retreat after the battle of the Marne. He also took a prominent part in the German attack against Verdun.

He is the author of a number of interesting and important works on military subjects, among the last of which is the life of General von Falkenhayn who succeeded Von Moltke as Chief of Staff and Commander in the Field of the German forces on the west front, in September, 1915. The principal purpose of that work was a defense of Von Falkenhayn for aspersions cast upon him because he did not succeed in fully making good the debacle of the German Army caused by the blundering imbecility of the emperor's favorite, Von Moltke, in the campaign of the Marne and those immediately following it.

Since the close of the war Von Zwehl has been a prolific, prominent, and forceful writer on all matters of general military interest and a reviewer of military works by other writers. Many of his articles have appeared over his pseudonym of "*Lucius Cincinnatus.*" All his writings have been interesting and instructive, well balanced and fair, abounding in good humor and frequently pervaded with witty satire and reaching occasionally trenchant sarcasm. He was a large contributor to the pages of the *Militär-Wochenblatt* and was highly appreciated by the editorial management of that military journal.

A country which adopts a policy of neglecting, in time of peace, to prepare for war insists upon the utmost economy as regards money matters and adopts a most improvident and wasteful extravagance of time. * * * When such a country is later forced into war, it necessarily is compelled to reverse its action, and, in order to provide for the troops in the short time available, must exercise economy as to time and be extravagant as regards money.—*Quartermaster General Henry G. Sharpe, the Quartermaster Corps in the Year 1917 of the World War.*

MILITARY NOTES

furnished by

THE MILITARY INTELLIGENCE DIVISION, G. S.

Poland

USE OF GAS AND SMOKE FROM TANKS.—At the maneuvers held this summer at the camp of instruction at Rembertow near Warsaw the use of combat gas and smoke was studied in detail.

One of the novelties which marked these maneuvers was the use of a new kind of tank. This tank, furnished with cylindrical reservoirs and surmounted by megaphone-shaped funnels, constitutes the apparatus for emitting protective smoke. At the word of command compressed gas from the reservoirs was emitted in dense clouds, creating a curtain in front of the firing line of the infantry, which permitted the men to advance without being seen. The experiment was entirely satisfactory.

Finland

THE FINNISH RATION.—The Finnish Army ration allowance has been fixed at seven and a half Finnish marks, or about eighteen and three-quarter cents per day. This amount is sufficient to provide three good meals daily.

The principal meal is served at noon and ordinarily consists of a meat stew with vegetables as the chief dish. For breakfast, cereals, bread and coffee are served. Supper is a light meal. Coffee is provided for but one meal only, tea being furnished for the other meals.

BERGMANN GUN AND BLANK AMMUNITION ATTACHMENT.—The Finnish Army has recently adopted the Bergmann automatic gun (sometimes referred to as the Bergmann pistol) and a special attachment, developed and manufactured in Finland, for firing blank cartridges. The Bergmann is about the size of the Thompson gun, though somewhat lighter; the magazine holds twenty-five shells.

The modification for blank cartridges consists of a specially constructed barrel, enlarged and threaded, at the end of which is screwed a cap whose front surface is perforated by a number of small holes about four millimeters in diameter. The blank cartridge used has a soft pine wood bullet-shaped pellet instead of a paper slug. The propelling charge drives the wood pellet with great force through the perforations in the barrel cap so that the pellet is shredded into many very small pieces as it leaves the gun which fall to the ground three or four feet from the barrel. Experiments have shown that if fired at a man's hand held two feet from the muzzel the only sensation felt is a momentary sharp tingling.

The device has been in use for some months and has been found most satisfactory. It is considered entirely safe and no accidents, which so frequently happen with the usual type of blank cartridges, have been reported. The gun forms part of the equipment of the Civil Guard, none having been so far issued to the army. It is reasonably accurate up to forty meters and has a rate of fire of about 300 to the minute.

Spain

SYSTEM OF PROMOTION OF OFFICERS.—Two schools of opinion have existed in the Spanish Army on the subject of promotion for many years; advocates of one of these insisted on promotion for war merit only, others believed in promotion by seniority.

Each one of the systems undoubtedly has many factors which recommend it. Ambitious officers, advocates of the first, sought duty in Morocco where opportunity might present itself for rapid advancement in the military hierarchy. The defect of this system, however, might result in the promotion of officers of high courage only, lacking in other necessary qualifications. On the other hand, with promotion by seniority alone with a large proportion of the army engaged in active service, others who remained at home in Spain would receive all of the advantages of casualties in action and deaths incident to the long-extended Moroccan campaign.

The first system, that of promotion by war merit, has been in effect for some years, and many officers who have been for a long time in Morocco have attained rapid promotion by gallantry in action. General Franco, an officer of only 34 years of age, is a marked example.

Many years ago the Artillery and Engineers of the Spanish Army entered into a compact to refuse promotion except by seniority, accepting instead of promotions for gallantry the award of war crosses which gave them certain annual increases in salary which were practically equivalent to what the increase in rank would bring.

In order to end this unsatisfactory state of affairs, General Primo de Rivera had a decree published recently which discontinues promotion by war merit beginning October 1, 1926. On and after that date promotion is to be by seniority and by a system of election in proportion to the vacancies occurring annually, as follows:

1/4 of vacancies of General;
1/5 of vacancies of Colonel or Lieutenant Colonel;
1/6 of vacancies of Major;
1/10 of vacancies of Captain.

In order to be eligible for promotion to the vacancies reserved to election, applicants must fulfil the following conditions: to be in the first half of the promotion list, to have been declared apt for promotion by seniority, to have passed the preparatory course for promotion, and to have sufficient merits. A classifying board will submit to the Ministry of War a list of the most qualified officers for promotion in the months of November and December of each year. In estimating the merits of applicants the following qualifications among others will be considered: Special crosses granted to the officer such as those of San Fernando, Military Medal, or Maria Cristina; physical aptitude; moral character and energy; professional culture; special knowledge such as completion of the Escuela Superior de Guerra.

THE GUARDIA CIVIL.—One of the most famous military police forces in the world is the Guardia Civil of Spain, ranking with the Carabineros of Italy. The official Spanish Diaro recently published the details of the organization of the force which now consists of 1245 officers, 26,224 other ranks, and 5557 horses.

This force is one of which Spain can indeed be proud. They are well paid and well dressed; they are always on the alert and most courteous upon all occasions. They give a wonderful sense of security to the traveler in Spain for wherever one goes a pair of these Civil Guards are ever ready to aid and protect one.

The organization is paid by the Ministry of the Interior but as regards its organization, personnel, armament, and discipline, it is administered by the War

Department. It is divided into twenty-eight Tercios or regiments with headquarters in the important provinces and is considered as an auxiliary of the army. The corps consists of infantry and cavalry forces grouped under the command of a colonel and subdivided into battalions commanded by lieutenant colonels. Almost every village in Spain has a post of Guardia Civil.

The Guard is recruited by voluntary enlistment and is composed of discharged army and navy enlisted personnel, noncommissioned personnel being preferred; officers join by voluntary transfer from the army. The force today is commanded by a lieutenant general who has one major general and four brigadier generals as assistants. The troops are divided between the infantry arm and the cavalry arm, there being 21,000 of the former and 5200 of the latter.

Switzerland

Training of Mountain Artillery Recruits.—Much has been written in the past of the efficiency of the Swiss military system; in fact, it has often been held up as a model upon which our own system might be modeled profitably. That it is efficient would seem to be shown by the following account of a practice march of the Mountain Artillery Recruit School as a grand finale of the course of training of 360 recruits which were allotted this year to the Mountain Branch of the Artillery arm.

The recruits were organized into three batteries and a battalion headquarters. The march commenced on July 2 at 4:30 A. M., and terminated on the evening of July 9; and was made through the difficult mountain terrain just east of Berne in the vicinity of the Lake of Thun. The command aggregated 18 officers, 360 men, and 184 horses and mules. As a general rule the batteries alternated in leading the march, the other batteries following at 15-minute intervals.

The route entered the Gemmi Pass almost immediately where the first casualty occurred. A pack horse of the first battery slipped and fell, getting his two left feet over the side of the trail where he hung for several minutes while the lead and follow-up men did their best to get him back on the trail. Fortunately, this delay enabled the pack animals in the three zigzags of the trail underneath to be gotten out of the way, so that in his final struggles, as he toppled over, he fell clear of the men and horses winding up from below. He rolled down at first sideways and finally end over end, crossing the trail three times in a fall of about 150 feet, and finally lodged head downward on a steep slope just at the edge of a precipice of some 600 feet, where he was anchored with ropes to prevent his falling further, carrying further destruction to the other batteries which had to pass underneath. His neck and other bones had been broken in the fall so that he was quite dead. As a punishment and warning example to the men, his leader and follow-up men were required to carry his load of about 200 pounds for the rest of the day's march over the mountains.

The summit of the pass was reached by the leading battery at 9:00 A. M. where the real difficulty of the day's march began. The plateau of the summit of the pass, several miles in length, was covered with deep snow, very treacherous and difficult. The feet of the animals were constantly breaking through the soft snow and the men had great difficulty in pulling them out. Through this part of the pass every endeavor was made to improve the trail, but without much success. The guns were dismounted from the backs of the animals and held with rope-trails, but at best the progress was very laborious and slow, so that it required five hours of very hard work on the part of everyone to cover the few miles until

the noon halt was reached. Here hot tea was served to the men from the fireless cookers which are a part of the mountain battery's equipment, and the horses were also fed. It is a rule in the Swiss Mountain Artillery to save up both rations and forage so that extra meals may be given to both men and animals on long climbs through the mountains.

Following three hours of steep descent, the command reached the lower ground at six o'clock with thirteen kilometers to go to the objective of the day's march. After an hour's halt for supper for the men and animals, the last stage was made to the night's camp, which was reached at 10:00 P. M. by the last battery, making a total day's march of seventeen hours including two halts of an hour each. The command bivouacked for the night on a grassy plot near the railway station, the officers being quartered in several of the small hotels. Marching into camp, the batteries were reviewed by the commander, the young recruits executing "eyes right" with a grimness and determination which provoked most favorable comment from the observers. Not a man had fallen out and the only casualties had been one horse killed and one severely wounded.

The second day's march was over a mountain road paralleling a valley and was of some twenty kilometers in length. After reveille at 7:00 A. M., the morning hours were devoted to cleaning equipment and preparing for the march which was begun at 11:00 A. M., the objective being reached at 4:30 P. M. The heat was very oppressive and little air was stirring so that the men and animals suffered more fatigue on this day's march than on the much longer one of the first day.

The unusually good comradship existing between the officers and men of the Swiss Army was illustrated by several instances of the officers assisting tired men with their packs and rifles. The noon meal this day, carried as usual in the fireless cookers, consisted of oatmeal soup, supplemented by bread and raw bacon carried in the men's haversacks. Raw bacon is considered a great delicacy by the Swiss.

The third day's march, over a difficult pass, was begun in the cool of the morning at 5:00 A. M., the ascent being comparatively easy, but the descent extremely difficult as the trail was narrow and so muddy and in places so rocky that at first sight it did not seem possible to get the animals down without accident. In the descent, the two "steering straps," fastened on to the rear part of the horses' harness and held by one and in some cases by two follow-up men, were the only means of saving the animals from losing their balance and toppling headforemost. The trail was much too narrow to permit the guns to be set up so that the heavy weights had to be carried by the animals for the entire distance. Camp was reached at 2:30 P. M.

The fourth march was expected to be so difficult that a working party of six officers and forty men was sent out at 5:00 P. M. The next morning a heavy rain was falling which greatly hampered the work of preparing the trail and of advancing supplies for crossing the pass. Convoys were sent up to the advance base both morning and afternoon, every horse and mule carrying two bales of straw (90 pounds each) or hay (100 pounds each) or its equivalent. By noon next day all the stores for the crossing had been accumulated at the advance base.

The following morning the passage of the pass was commenced. The ascent was so arranged that the gunners of the third battery should accompany and assist the leaders of the leading battery, while the gunners of the leading battery should descend and assist the leaders of the third battery, while both joined in assisting the intermediate battery. In addition to these general precautions, six

officers with an appropriate number of men were assigned to direct the passage of the six places of special difficulty and danger.

The first two danger spots consisted of the passage of very steep, snow-covered slopes, which at the continued melting temperature threatened to break down. The third was a crossing of a waterfall which had been covered over with snow and ice and which threatened to break and tumble down, but most of which had been cut away with infinite labor and difficulty. The fourth place consisted of a narrow ledge of rock cut out from the face of a precipice down the center of which fell a sheet of water which could not be diverted. The principal difficulty here was that the animals had to take the sheet of water in their faces. If they tried to dodge it on the side of the rock, their packs would be torn off, and if they tried to dodge it on the outside, they were bound to go over the edge. In passing this place every animal had a man on each side of his head with two guiding him from the rear. The fifth difficulty was rounding a rocky promontory where a sharp turn and a steep accent had to be made at the same time. The danger here was that if the horse struggled to get ahead he would force his leader, who had been on the outside, off the precipice. The sixth and last of the difficult places was a very steep and slippery pass of bare rock, where, if the horse slipped, there was every probability that he would go tumbling over the precipice.

In the ascent, and in fact in all the work, a great contrast was noted between the conduct of the horses and the mules. In every place of danger the horses showed evident signs of excitement and sense of panic, while the mules remained calm and unconcerned. In the opinion of the Swiss officers there was no comparison between the suitability of the horse and the mule for mountain battery work. The mule, however, is regarded with great disfavor by the Swiss peasant and, as a consequence, as the Government can not afford to keep animals of its own, they are forced to use horses for most of the mountain work.

The ascent of the pass and the corresponding descent were made without accident due to the excellent preliminary arrangements made by the battalion. Camp was reached by the leading battery at five o'clock in the afternoon, where the command bivouacked for the night. Lacking enclosures, picket lines were set up, formed by iron-bound sticks driven into the ground to the depth of a foot and a half with the tops about three feet above the ground. The feed was on one side and, although the picket line was unusually low from an American standpoint, the animals had evidently been trained to stay on their own side.

After the animals had been cared for and the guns thoroughly cleaned, the men proceeded to build a shelter-tent camp. The shelter-tent pieces are five feet square and pitched at right angles with each other. Five to eight of these sections were put up together, with the opening in one of the middle sections, the ends being lashed down. The tent was floored with large strips of canvas over which pine boughs were spread to form a mattress. Each man carries a blanket, beds being made up for three men with one blanket underneath and two over. The men sleep crosswise the length of the tents, which were so pitched that the side for the head was the higher. Supper for the men consisted of oatmeal soup and a meat stew, each man carrying his own bread. After supper bonfires were lighted by each battery, about which the men gathered and sang the songs of their native villages.

COAST ARTILLERY BOARD NOTES

Communications relating to the development or improvement in methods or materiel for the Coast Artillery will be welcome from any member of the Corps or of the Service at large. These communications, with models or drawings of devices proposed, may be sent direct to the Coast Artillery Board, Fort Monroe, Virginia, and will receive careful consideration. R. S. ABERNETHY, *Colonel, Coast Artillery Corps, President Coast Artillery Board.*

Projects Initiated During the Month of September

Project No. 485, Inherent Error in Antiaircraft Sound Ranging, Angular Speed Method.—A study as to value of inherent errors in angular speed method of tracking aerial targets by sound, and of the practicability of introducing corrections.

Project No. 486, Antiaircraft Fire Control Methods for Night Firing.—The Chief of Coast Artillery directed the Coast Artillery Board to submit a discussion of this subject giving its opinions at the present time, based on the developments that have been made in the operation of searchlights and listening apparatus during the past year.

Project No. 488, Oil Screw Filler with Metallic Packing.—This is an improved form of oil gun which has been been received from the Ordnance Department and is being tested by the 51st Coast Artillery (Hv Tr).

Project No. 489, Cant Correction Device.—This device is intended to aid the inexpert marksman to avoid canting the infantry rifle. Consideration by those charged with musketry instruction was recommended.

Project No. 490, Aerial Observation, Codes and Panels.—The Commanding General submitted to the War Department for approval a special radio and panel code for use in aerial spotting in the Canal Zone. This recommendation was referred by the Chief of Coast Artillery to the Coast Artillery Board for recommendation and comment.

Project No. 492, Test of Plotting and Relocating Board, T1, (Long-Range Cloke Type).—This is the first of the long-range Cloke plotting boards to be completed and it is to be tested at Fort Story.

Project No. 493, Allotment of Time in Training Schedules for Preparation and Study of Reports of Target Practice.—It was recommended that consideration be given to the setting aside of a fixed period for preparation of target practice reports with required critiques and conferences, exclusive of other instruction.

Completed Projects

Project No. 486, Antiaircraft Fire Control Methods for Night Firing

I—HISTORY OF THE PROJECT.

1. In Coast Artillery Board Project No. 252, "Modification of Altimeters and Gun Sight for Night Use," the following statements were made:

> 1. Past experience in the operation of antiaircraft searchlights has been such as to lead to the logical conclusion that night artillery fire at aerial targets must be by the method of "fire by sound"—that searchlights could

not be relied on to illuminate a target for a sufficient length of time to enable fire thereon by normal daytime methods.

2. Present searchlight-aeroplane operations being carried out by the 61st Artillery (A. A.) in conjunction with night bombardment airplanes from Langley Field are so successful, from an antiaircraft viewpoint, that more consideration of night firing at illuminated aeroplanes is warranted.

3. *a.* It is evident that even should a single plane be illuminated the normal position finding system probably will be inoperative because of the irregular course which will be adopted by the aviator in an effort to escape from the beam. One of a formation so illuminated would, of course, be more or less restricted to a regular course, because of the necessity for maintaining the formation.

b. Even should the course become irregular it is still possible and essential that fire be opened with estimated deflections. For such fire to be of any value the altitude, which is the basis of the determination of fuze range, must be accurately determined. With an accurate altitude and a Range Indicator, gun type, the most effective night fire possible at a target flying an indeterminate course may be improvised.

c. Should the target escape from the beam the determination of its altitude while illuminated will be of great value in the continuation of the fire against the unseen target whether by "fire by sound" or barrage methods.

2. Letter, Office, Chief of Coast Artillery, dated June 8, 1926, directed that "the Coast Artillery Board submit a similar discussion on this subject giving its opinions at the present time, based on the developments that have been made in the operation of searchlights and listening apparatus during the past year."

II—Discussion.

3. Since actual use in warfare antiaircraft searchlights, both in material and methods, have gained in efficiency. The beams have greater intensity and greater range; distant control and improved hand control facilitate operation of "following," and improved carbons, automatic feed, and the protection given by barrel type make the arc more dependable. Original searching by guesswork has progressed by stages through searching by aid of single horns, paraboloids, etc., to the use of exponential horns utilizing the binaural sense of the listener. Prediction based on the apparent source of sound and corrections for sound lag now enable searchlight batteries to point the light beams at or in close proximity to the plane.

4. Exercises in the past year have demonstrated that, regardless of the maneuvering of the plane endeavoring to cross a searchlight area to reach an objective, only a small percentage reach the objective unilluminated. Airplane tactics, such as zigzag courses, gliding with motors throttled, sound interference from another plane leaving the searchlight aera, have failed to prevent the lights, assisted by sound locators, picking up and illuminating the large majority of targets.

5. Targets once illuminated have been easily held in the beam when three lights were used. Frequently two lights sufficed. The primary targets for searchlights and guns are loaded bombers. Such planes are limited in their maneuverability by their weight and their mission. Once illuminated they have little probability of escaping the searchlight beams.

6. An illuminated bomber maintaining rectilinear flight for any period over sixty seconds while within range of a 3-inch gun battery has the probabilities against escaping unhit. Using the conservative figure of 5% probability of hitting (recent practices have all exceeded this) twenty rounds, or five rounds per gun, are necessary for one hit. Five rounds per gun require sixteen seconds firing time which with average time of flight of 15 seconds and 8 seconds dead time gives 39

seconds plus time used by range section in tracking to obtain data (should be less than 30 seconds), a total time of 69 seconds or less to expect one hit on an illuminated target maintaining rectilinear flight.

7. Constant speed, direction and altitude are not to be expected; neither are great variation in average speed or general direction nor much change in altitude to be expected. That loaded bomber has a mission—to get somewhere, to unload, and to get back. He can vary his speed within certain limits; he can proceed on a curved course; he can gain altitude but very slowly and while he can lose altitude quickly, generally he will not want to come closer to lights and guns.

8. To meet the variations in speed, average deflections can be used or barrage fire can be resorted to. To meet the sinuous course—such an instrument as the Wilson Computer will permit predictions on a curved course and the present equipment would place center of impact now over, now short of actual course of target, which is not so ineffectual. To meet changes in altitude, arbitrary changes can be set on range instruments and direct fire continued. In any case, whatever the variation in any of the elements of flight, illumination of the plane will assist in barrage fire.

9. To meet the problem of fire upon a target flying an irregular course, the use of large caliber machine guns with tracer ammunition offers great promise.

10. Barrage fire during the World War was usually placed according to expected line of approach at expected altitude. By using present sound locators such fire can be placed close to actual line of approach, with angular predictions for travel, using estimated altitudes to obtain fuze ranges. It is possible that future development along the lines of the photo-electric cell may give the line of sight to the target and some means devised of obtaining range (*e. g.*, two-station observation or estimate based on known speed and angular travel). If the future should produce some such devices night fire upon unilluminated targets would approach the efficiency of day fire.

11. The use of star shells has been suggested. After obtaining approximate location by sound locator several star shells fired in the vicinity of the plane might disclose the target and facilitate picking up by searchlights. The efficacy of continuous illumination by star shell is very doubtful. A short burst might blind the observer and delay opening fire with H. E. shell. It would appear that the effectiveness of star shell illumination and best methods for its use can be determined only by experiment.

III—Conclusions.

12. The Coast Artillery Board is of the opinion that:

a. Night fire on a target illuminated by searchlight is equally as efficacious as day fire, rectilinear flight being necessary for both.

b. As a rule antiaircraft searchlights properly distributed can hold in the beam a loaded bomber, once illuminated.

c. Equipment and training should provide for direct fire on illuminated target.

d. When fear of such direct fire causes a pilot to avoid rectilinear flight the same methods must be used as would be used in like circumstances in daylight—continue fire with estimated deflections, open barrage fire, or suspend fire.

IV—Recommendations.

13. The Coast Artillery Board recommends that:

a. Equipment and training of antiaircraft organizations be such as to permit direct fire upon seachlight illuminated target.

b. Training of antiaircraft gun batteries include instruction in computing and setting data for barrage fire.

V—ACTION OF THE CHIEF OF COAST ARTILLERY.

The proceedings of the Coast Artillery Board on Project No. 486 are approved.

Project No. 493, Allotment of Time in Training Schedules for Preparation and Study of Reports of Target Practice

I—HISTORY OF THE PROJECT.

1. This project originated as a result of the discussion among Coast Artillery officers and in the Coast Artillery Board of the question of simplification of target practice reports.

II—DISCUSSION.

2. The preparation of target practice reports should be made carefully and deliberately, and the work should not be subject to interruption.

3. The greatest benefit from service practice can be obtained only by a deliberate study of the records and reports of the practice.

4. It is understood that in some commands training schedules set aside several days following service practice for the preparation and study of the reports and the holding of critiques and conferences. In other commands schedules have provided for the resumption for other forms of instructions and training immediately on conclusion of service practice. It would appear that more satisfactory results are obtained by allotting a definite time for this work.

III—CONCLUSIONS.

5. The Coast Artillery Board is of the opinion that it is desirable that a definite period immediately following each service practice be allotted in training schedules to the preparation of records and reports and the holding of the necessary conferences and critiques.

IV—RECOMMENDATIONS.

6. The Coast Artillery Board recommends that consideration be given in future training programs to the allotment of from two to four days' time, exclusively of other training, to the preparation of records and reports and holding of the necessary conferences and critiques.

V—ACTION OF THE CHIEF OF COAST ARTILLERY.

1. Referring to your Proceedings No. 493, forwarded to this office on the 15th instant, I would inform you that the following action has been taken by this office:

353.17/Q-29 1st Ind.

War Department, O. C. C. A., September 20, 1926.—To the Adjutant General.

1. The Chief of Coast Artillery concurs in principle with the recommendation made by the Coast Artillery Board in the enclosed proceedings which is, in brief, that after the completion of any target practice by a Coast Artillery unit a reasonable amount of time be given, to the exclusion of other classes of training, to the study, evaluation, and recording of results obtained.

2. As the matter of including such time for this work in training programs is a matter not under the control of this office, it is recommended that instructions be issued to corps area and department commanders to carry out the recommendations made by the Coast Artillery Board.

BOOK REVIEWS

The Story of the Little Big Horn. By Lieut. Col. W. A. Graham. The Century Company, New York. 1926. 6"x 9½". 174 pp. Ill. $2.50.

June 25, 1926, marked the fiftieth anniversary of the famous Custer battle with the allied tribes of the Plains Indians on the Little Big Horn; and the numerous magazine articles and newspaper accounts which appeared all over the country in commemoration of the event showed clearly that time has not stilled the controversy waged over that historic fight.

Who was to blame for the outcome of the gallant but hopeless stand of the five troops of the Seventh Cavalry? Did Major Reno desert General Custer at a critical moment? Was General Custer alone responsible for the greatest defeat ever inflicted upon Regular troops of the United States Army by warriors of the plains? The shorter article gave more or less truthful accounts of the battle, showing no particular investigation into the facts surrounding the campaign; but two books have appeared this spring which are the findings of years of painstaking research and of personal interviews with the survivors of the Custer battle. The first book, *A Trooper With Custer*, by E. A. Brininstool, has already been reviewed in these pages.

This book by Colonel Graham, which appeared immediately after Mr. Brininstool's, is a more pretentious volume, and the author, who is a judge advocate in the United States Army, has gathered and systematized his material with judicial thoroughness. Both authors have made an honest effort to render fair and impartial judgment as to where the blame rests for the failure of the 1876 campaign; and the decision reached is practically the same in each book.

While Colonel Graham does not definitely answer the question of responsibility in direct sentences, yet he presents facts that make the reader realize that Custer and his troopers met death because gross negligence on the part of the Indian agents permitted the hostiles to buy the latest type of Winchester repeating rifles from unscrupulous traders; because the scouts had made grave errors in the estimate of the number of hostile Indians in the field; and because General Custer, by forced marches, exceeded the schedule arranged by General Terry and attacked the Indians without waiting for reinforcements and without providing for concerted action between the three detachments into which he had divided his command.

The full account of the battle, illustrated by maps and photographs, makes it very evident that after the fighting started it was impossible for Major Reno to join Custer; and extracts from the testimony of Seventh Cavalry officers given at the Court of Inquiry held by Major Reno's request show that these officers believed that if Major Reno had handled his command any differently they would all have met the fate of General Custer's command.

Both Mr. Brininstool and Colonel Graham object to the term "massacre" when speaking of the Little Big Horn battle. "The simple truth," to quote Colonel Graham, "is that in this, the greatest battle ever waged between the red men and

the white, between a receding and an advancing race, the red men had the victory because they exhibited that day a greater proficiency in the art of war than did the chosen representatives of the white race. . . . It was a bitterly contested combat to the death between the armed representatives of two civilizations, each of which fought after the manner of his kind. . . . Warfare, however it be savage, is not massacre when the conquered go to their deaths with arms in their hands."

To add to the interest of the book, there is an historical introduction by General Charles King, which gives a brief biography of General Custer and an account of the cavalry campaigns against the Indians, with special reference to the hard-fighting Seventh Cavalry. The foreword is written by General W. S. Edgerly, retired, one of the surviving participants in the Little Big Horn fight. —E. L. B.

Airmen and Aircraft. By Major H. H. Arnold. Ronald Press Company, New York. 1926. 5½"x 8½". 216 pp. $3.50.

This volume covers in general the entire field of aircraft. The author begins with an outline of mythology and early history of aircraft development. From that he proceeds to a study of what makes aircraft fly, covering the general types of aircraft and the elementary principles involved, dynamic and static. Two chapters are devoted to army methods of training aviators, followed by chapters recording some of the famous flights in history and paying tribute to some of the outstanding fliers to date. This brings us to the latter part of Major Arnold's book, where he makes an enthusiastic study of the dependability of aircraft and its possibilities in the commercial world. The book is closed with a chapter on "Aircraft of the Future."

The subject matter is covered in nontechnical language and in only an elementary manner. It is not a learned treatise on the subject, but it is quite readable and instructive insofar as it goes. Apparently it is written primarily for the young man who may contemplate aviation either as a sport or vocation.—C. S. H.

The Writing of History. By Jean J. Jusserand, Wilbur C. Abbott, Charles W. Colby, and John S. Bassett. Charles Scribner's Sons, New York. 1926. 5¼"x 8". 143 pp. $1.50.

In recent years it has appeared that the writing of history in the United States has not been in a satisfactory state, and the American Historical Association appointed a committee to analyze the situation. This book is a report of the investigation; and as such it is merely an expression of the views of the individuals composing the committee.

Unquestionably many of the earlier histories possess a fascination which is lacking in most of the more recent books; but at the same time it must be admitted that the older histories, for the most part, lack the accuracy which is found today. It appears to the committee that several things combine to bring about the existing situation. Until late in the last century, when historians like Bancroft and Prescott were accepted among great writers, history was decidedly in the realm of literature; style was perhaps more important than accuracy; historians spent a great deal of time in studying the matter of presentation before they took up historiography. Moreover, most of the more distinguished historiographers, as Bancroft, Prescott, Motley, Parkman, were men of independent means, who could well afford to spend years in preparation.

During the last two decades of the nineteenth century a new school of historians arose, in which interest was centered on getting at the exact truth of past events. History was removed from literature to science; presentation became a secondary matter; and with the consequently increasing dryness of histories, public interest waned. Historians, no longer able to make a living from writing, turned to teaching, with resultant divided interests. The result has been that the present generation has been unable to produce a Gibbon or a Macauley or a Parkman.

Such, in brief, are the findings. No solution is offered; but historiographic courses in the curricula of colleges are suggested as tending to bring about an improvement. The subject requires further investigation, and to the student of history this little book affords an excellent starting point.

Facts About Oriental Rugs. By Charles Wells Jacobsen. C. W. Jacobsen, Syracuse. 1926. 4"x 8¾". 56 pp.

One cannot, of course, learn from a book alone how to select rugs, but there is a certain minimum of information one must have before attempting to purchase anything so variable in quality and price as oriental rugs. Such information is briefly given in Captain Jacobsen's monograph. He classifies oriental rugs and points out a few of the salient features of each; he discusses antique, semi-antique and new rugs, and mentions the various weaves in each group; he tells us somewhat of washed and unwashed rugs; and he gives some idea of the relative values of the different kinds and weaves of rugs now obtainable in the market. The pamphlet is not a rug manual, but it contains much of value to the unwary rug purchaser.

Warriors in Undress. By F. J. Hudleston. Little, Brown and Company. 1926. 5¾"x 8¾". 229 pp. Ill. $3.50.

This book is a volume of chatty sketches of various soldiers—Wellington, the Duke of York, the Crimean generals, Garibaldi, Washington's generals, Henry Lloyd, John Shipp; and, as if this were not enough, it ends with chapters on "Maxims: Moral and Immoral," "The Warrior's Library," "Librarians in Undress," and a dissertation on "What They Fought Each Other For." The book is not much relieved by humor, and has no military value.—S. M.

The World War was a conflict of materials, almost as much as of men. All participants mobilized their industrial resources in a manner, and to an extent, undreamed of in times of peace.—*Benedict Crowell, America's Munitions.*

HOTEL ASTOR—NEW YORK

FRED'K A. MUSCHENHEIM

ARMY AND NAVY HEADQUARTERS

Leon's Shoppe

3021 Washington Ave.
NEWPORT NEWS . VIRGINIA

Complete New Line of Ladies' Ready-to-Wear Apparel

The HEFFELFINGER COMPANY, Inc.

COAL, WOOD, LUMBER, *and*
BUILDING MATERIAL

FOOT OF
KING STREET

PHONES
23 and 58

HAMPTON, VIRGINIA

STUDEBAKER

SALES :: SERVICE :: PARTS

Newport News Motor Car Company
INCORPORATED

B. J. STEPHENSON, *Secretary and Treasurer*

232-238 27TH ST., NEWPORT NEWS

101 E. QUEEN ST., HAMPTON

The MAGNOLIA TREE INN

LUNCHEON . DINNER
AFTERNOON TEA

TEA ROOM AND GIFT SHOP

ROOMS AND BOARD BY DAY OR WEEK

Special arrangements for card parties, etc.

TELEPHONE: Hampton 951

26 S. KING STREET

HAMPTON, VIRGINIA

EISEMANN'S

SHOES *and* HOSIERY
That Satisfy

2600 WASHINGTON AVENUE

NEWPORT NEWS, VIRGINIA

THE BANK OF PHOEBUS
PHOEBUS, VIRGINIA
LOCATED BETWEEN FORT MONROE AND LANGLEY FIELD
A Bank of Capital and Character
Capital $43,000.00 Surplus & Profits $75,000.00

S. C. REES, President
O. W. WARD, Vice-Pres.
H. D. WILSON, Cashier
F. J. BLAKE, Asst. Cashier

An Extra Measure of Protection
"Roll of Honor" Bank
An Extra Measure of Service

We Can Handle Your Banking Business Satisfactorily

S. J. WATSON, JR., *Electrical Contractor*
IGNITION REPAIR STORAGE BATTERIES
16 E. QUEEN ST. RADIO—AUTO SUPPLIES PHONE 166

QUALITY BREAD, ROLLS *and* PASTRIES
PARTY AND CLUB ORDERS SOLICITED PHONE HAMPTON 75
QUALITY BAKE SHOP, INCORPORATED 56 W. QUEEN STREET HAMPTON, VA.

JOE FRANK & SON 210 THIRTY-FIRST STREET NEWPORT NEWS, VA.
Expert Dyers and Cleaners
Daily Deliveries to Fort Monroe PHONE 2030

25 YEARS SERVICE TO OFFICERS OF THE CORPS
SHERWOOD INN BARBER SHOP
ANTONIO SARURRO, *Proprietor*
LADIES' WORK SOLICITED
SHERWOOD INN FORT MONROE, VA.

The Journal of the Royal Artillery
PUBLISHED QUARTERLY
By the Committee of the Royal Artillery Institution, Woolwich, London, S. E. 18

SUBSCRIPTION, £1-0-0 PER ANNUM

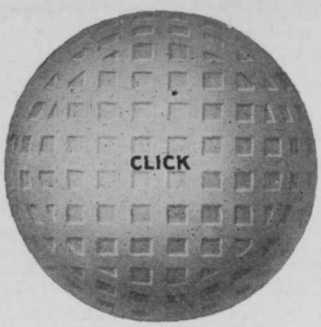

4 ~Reasons

DISTANCE
DURABILITY
QUALITY
ACCURACY

Whether a 70 on your score card means nine holes or eighteen—Colonel Golf Balls improve your game. Their durability and extra long true flight enable you to play without the **mental hazard** of wondering how the ball will act.

When you swing on a Colonel, you have the satisfaction of knowing that the ball is going to do the best it can to develop you into a champion.

Quality is higher than ever before—yet prices remain the same.

CLICK COLONEL
$1.00 each, $12.00 dozen
ST. MUNGO COLONEL
75c each, $9.00 dozen
Both in dimpled and meshed markings.

COLONEL GOLF BALLS

ST. MUNGO MFG. CO. OF AMERICA
121-123 SYLVAN AVE. NEWARK, N. J.

CUT BALLS REPLACED

FERGUSSON MUSIC COMPANY

ESTABLISHED 1893

EVERYTHING MUSICAL

PHONE 566

2909-11 Washington Ave. NEWPORT NEWS, VA.

OFFICE PHOND, 138-J RESIDENCE PHONE, 138-W

R. HAYDEN SMITH

Funeral Director and Florist

207 MELLEN STREET *Member F. T. D.* PHOEBUS, VA.

HOPPE'S
Nitro Powder Solvent
№9

Keeps Your Gun Clean

For cleaning High Power Rifles, Revolvers, Machine Guns and Firearms of all kinds, use Hoppe's Nitro Powder Solvent No. 9.

Removes primer and powder residue, leading and metal fouling. Quick-sure prevention of after corrosion. Prevents rust.

Recommended by Uncle Sam

For Sale at Post Exchanges

FRANK A. HOPPE, Inc.

2314 N. Eighth St., Philadelphia, Pa.

BOOKS

THE BOOKSHOP can secure for you any book on any subject, no matter where it is published. The price will never be more, and usually will be less than list price

THE BOOKSHOP

COAST ARTILLERY JOURNAL

FORT MONROE, VA.

NACHMAN'S DEPARTMENT STORE

Extends to all Army and Navy men the convenience of a charge account

Washington Ave. at 30th St. NEWPORT NEWS, VA.

BRITTON - ROWELL HARDWARE COMPANY

HARDWARE, PAINTS, OILS, PUTTY AND CROCKERY

Window Glass and House Furnishings

GOODYEAR TIRES AND TUBES

19-21 MELLEN ST., PHOEBUS, VA. PHONE 559

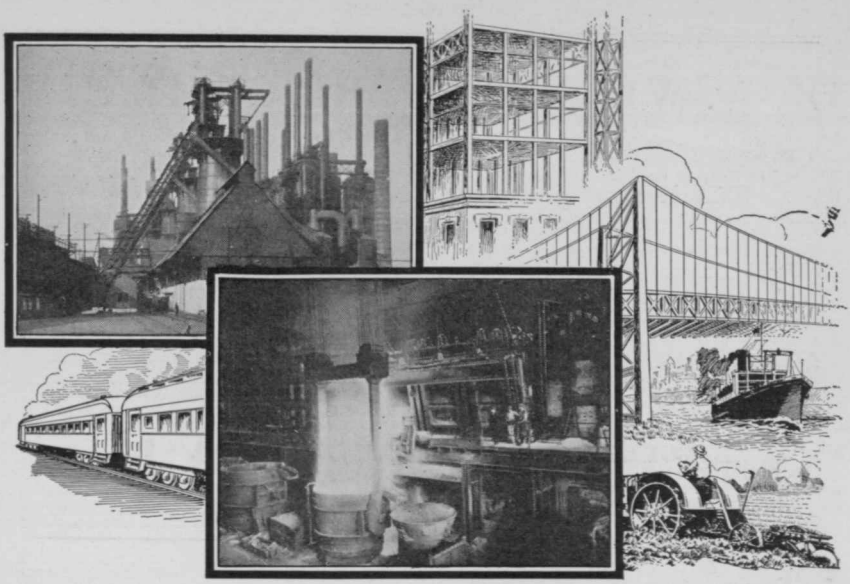

STEEL — FOR EVERY PURPOSE — IN ANY QUANTITY

STEEL is used in some form in practically every industry.

In the railroad industry, in the automotive industry, in the shipbuilding industry—steel is essential.

In the manufacture of machinery, in the erection of bridges and buildings, in the manufacture of agricultural implements—steel is a first requirement.

In the manufacture of ordnance material, in the equipment for practically every military and naval purpose—steel is indispensable.

The raw materials that go into the making of Bethlehem steel are extracted from Bethlehem-owned and -operated mines and quarries. Bethlehem-owned vessels and cars transport these raw materials to Bethlehem Plants, and complete control of every process in the manufacture—from ore to finished product — insures consistent quality. Extensive manufacturing facilities enable Bethlehem to supply steel for every purpose in any quantity.

For many years Bethlehem has shared in supplying the nation's demand for commercial steel, manufactured steel products and ordnance material.

BETHLEHEM STEEL COMPANY

GENERAL OFFICES: BETHLEHEM, PA.

PLANTS AT

Bethlehem, Pa. Steelton, Pa. Johnstown, Pa. Lebanon, Pa. Reading, Pa. Coatesville, Pa. Lackawanna, N. Y. Sparrow's Point, Md.

BETHLEHEM

B. W. WILSON PAPER COMPANY

RICHMOND, VIRGINIA

Distributors of WARREN'S STANDARD PRINTING PAPERS *and* STRATHMORE QUALITY PAPERS

also all kinds of PRINTING PAPERS, CARDBOARDS *and* ENVELOPES *for the Printer*

SALASKY OPTICAL CO.

2608 Jefferson Avenue
NEWPORT NEWS, VIRGINIA

EYEGLASSES, SPECTACLES, ARTIFICIAL EYES

OCULISTS · PRESCRIPTIONS FILLED

"You Can't Be Optimistic with Misty Optics"

PHONE 53

CLEANING and PRESSING

HAMPTON STEAM LAUNDRY

187 W. QUEEN STREET — HAMPTON, VIRGINIA

HOP'S PLACE

AUTOMOBILE ACCESSORIES
Kelly-Springfield Tires

GASOLINE *and* OIL — GLASS CUT FOR ANY MAKE CAR

PHONE 183 — 17 ARMISTEAD AVE. — HAMPTON, VA.

"Say It With Flowers"

J. C. BLOXOM AND SON

FOX HILL
VIRGINIA

CUT FLOWERS AND POTTED PLANTS

PHONES: 299-J—299-W — R. F. D. Box 31, HAMPTON, VA.

Ford — WE SELL ANYWHERE — Ford

SHACKELFORD AUTO COMPANY

HAMPTON, VIRGINIA

Ford — *Lincoln-Ford-Fordson* — Ford

HOUSTON

PRINTERS
PUBLISHERS
ENGRAVERS

De Luxe Printing at a Fair Price

HOUSTON BUILDING HAMPTON, VIRGINIA

THE MEISTER TAILORING COMPANY

Military and Civilian Tailor

Telephone 242 P. O. Box 452 Phoebus, Va.

FINE ENGRAVING MAGAZINE SUBSCRIPTIONS

The Bookshop, Coast Artillery Journal

SERVICE PRINTING HIGH GRADE STATIONERY

The

HIGH INTENSITY SEARCHLIGHT

has been used exclusively by the U. S. Army and U. S. Coast Artillery for the past eight years. This fact alone proves the Sperry Searchlight as Supreme in *quality* and *efficiency*.

THE
SPERRY GYROSCOPE CO.

LONDON NEW YORK TOKYO

Everything in Season *Tables for Ladies*

SHERRILL'S RESTAURANT

THE PLACE FOR MEN AWAY FROM HOME

120 Mellen Street *Home-made Pies a Specialty* PHOEBUS, VA.

Post Exchange Market

FORT MONROE, VIRGINIA
TELEPHONE 315

Fresh Fruits and Vegetables. Everything in Season. Fresh Killed Chicken a Specialty. Deliveries: Morning and Afternoon

M. CARLI, *Proprietor*

The

Army

Souvenir

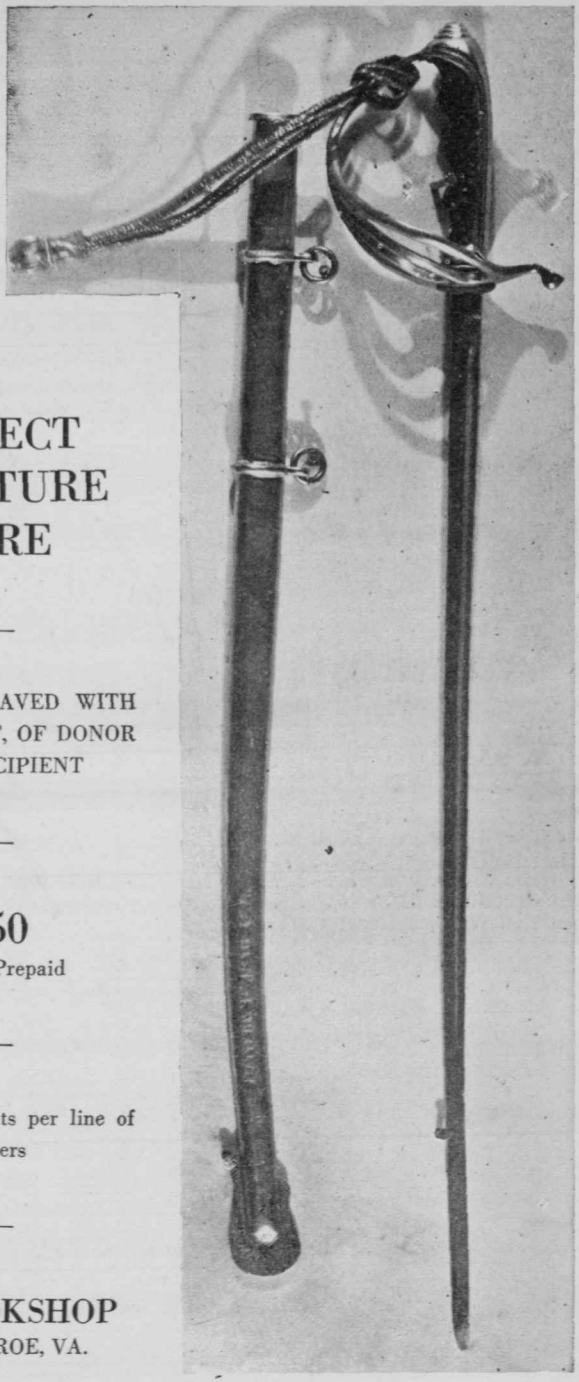

A PERFECT MINIATURE SABRE

CAN BE ENGRAVED WITH NAME OF POST, OF DONOR OR OF RECIPIENT

$1.50

Carriage Prepaid

Engraving 25 cents per line of 16 letters

THE BOOKSHOP

FORT MONROE, VA.

Fiction at Bargain Prices

These slightly used books from our circulating library are as good as new

At 75c

Elaine at the Gates	*Maxwell*
The Law of Destiny	*Wiles*
The World Outside	*McGrath*
The Safety Pin	*Fletcher*
The Secret Power	*Correlli*
The Callahans and the Murphys	*Norris*
Real Diary of a Real Boy	*Shute*
Jim Hanvey, Detective	*Cohen*
The Home Maker	*Canfield*
The Street of Seven Stars	*Rinehart*
More Tish	*Rinehart*

At $1.00

False Scent	*Fletcher*
Rose of the World	*Norris*
Numerous Treasures	*Robert Keable*
The Kenworthys	*Wilson*
Old Youth	*Dawson*
Drums	*Boyd*
The Black Arrow	*Stevenson*

At $1.25

The Vanishing American	*Grey*
The Thundering Herd	*Grey*
The Silent Voice	*Dell*
The Glory Hole	*White*
Mrs. William Horton Speaking	*Kilbourne*
The Old Ladies	*Walpole*
The Power and the Glory	*Parker*
Coral	*Mackenzie*
The House Without a Key	*Beggers*
The Carolinian	*Sabatini*
The Little French Girl	*Sedgwick*
Lorenzo the Magnificent	*Coolidge*
The Grub Street Nights Entertainment	*Squire*
Knights at Arms	*Bailey*
The Death of a Millionaire	*Cole*
The Rector of the Maliseet	*Reid*
Fingerprints	*Stinson*
The Sungazers	*Knibbs*

THE BOOKSHOP

FORT MONROE, VA.

F. W. Darling, *President* H. H. Holt, *Vice-President*
W. H. Face, *Cashier* G. B. Bradford, *Asst. Cashier*

The
Bank of Hampton, Virginia

Hampton, Virginia

Located Near Fort Monroe, Virginia

"A FRIEND TO THE ARMY"

Capital, Surplus and Profits - over $550,000.00
Resources - - - - over 3,000,000.00

The OLDEST BANK on the PENINSULA

You can, and a great many officers do, bank with us as easily by mail as in person. Write to us about it. Special attention given to all Army Accounts and we will be pleased to serve or advise in all financial or business matters.

4% Interest Paid on Savings Deposits