THE COAST ARTILLERY JOURNAL

Published as the Journal U. S. Artillery from 1892 to 1922

MAJOR ROBERT ARTHUR, C. A. C. . . . . *Editor and Manager*
FIRST LIEUT. JAMES L. WHELCHEL, C. A. C. . . . . *Assistant Editor*

Volume 68 MARCH, 1928 Number 3

CONTENTS

U. S. S. WYOMING . . . . . *Frontispiece*

ANTIAIRCRAFT SPOTTING . . . . . *By* CAPT. C. E. BRAND 199

THE ANTIETAM CAMPAIGN 209
By MAJORS WELSHMER, MOORE, WILDRICK, AND SEYDEL

OUR MERCHANT MARINE . . . . . *By* MAJ. F. L. HOSKINS 229

THE MILITARY SITUATION OF CANADA . . *By* LIEUT. P. W. GEORGE 239

GENERAL SCOTT'S LANDING AT VERA CRUZ 244
By MAJ. H. W. T. EGLIN

COAST FORTS OF COLONIAL RHODE ISLAND 248

PROFESSIONAL NOTES 257
The 59th Coast Artillery (TrDr)—Private Frank G. Peterson—Battery Officers Shoot Down Sleeve Target—The Disarmament Question—Conquering the World Before Thirty—Brigadiers—Face Powder and Gun Powder—New Antiaircraft Gun—40th Division Reunion—Officers on Detached Service.

COAST ARTILLERY BOARD NOTES 271

BOOK REVIEWS 272
Peace or War—All the World's Airships—Taschen buch der kriegs flotten—The Conquest of the Air—The Outline of Man's Knowledge—Photography, Its Principles and Practice—The Silent Force—The Thundrer.

Authors alone are responsible for statements in contributed articles

Published monthly under the supervision of the Commandant, Coast Artillery School, by direction of the Chief of Coast Artillery, for the information of the Coast Artillery personnel of the Regular Army, National Guard, and Organized Reserves.

Terms: United States, $3.00 a year; single copies, 50 cents. Canada, $3.25 a year; single copies, 55 cents. Foreign, $3.50 a year; single copies, 60 cents.

Entered as second class matter at the Post Office at Fortress Monroe, Va. Acceptance for mailing at special rate of postage provided for in Section 1103, Act of October 3, 1917, authorized May 8, 1920.

Copyright, 1927, by the COAST ARTILLERY JOURNAL.

Address: The COAST ARTILLERY JOURNAL, Fort Monroe, Va.

Printed by HOUSTON PRINTING AND PUBLISHING HOUSE, *Hampton, Va.*

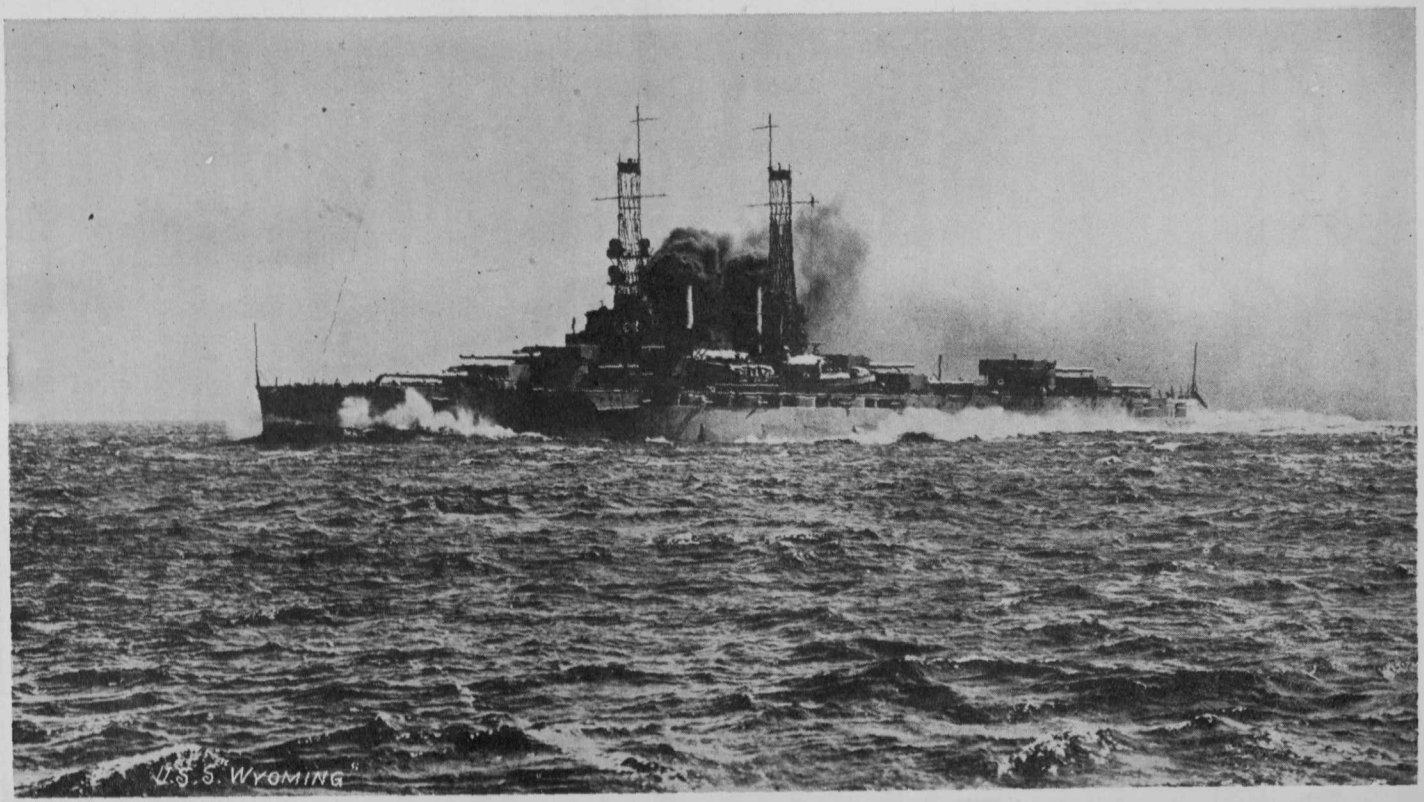

U. S. S. WYOMING

Length overall, 562 feet. Beam, 93 feet 2½ inches. Draft, maximum 29 feet 7 inches. Displacement, full load, 27,243 tons. Guns: twelve 12-inch, sixteen 5-inch, eight 3-inch AA, four 6-pounders (saluting), two 1-pounders, two machine, two landing. Armor: belt 11-9 inches, turret 12-9 inches. Horsepower, 28,000. Speed, 20 knots.

THE COAST ARTILLERY JOURNAL

Volume 68 MARCH, 1928 Number 3

Antiaircraft Spotting

By CAPTAIN C. E. BRAND, C. A. C.

First Prize, Annual Prize Essay Contest

THE comparatively recent experimental determination of the effective danger space of the antiaircraft shell burst in flight has placed the determination of "hits" for antiaircraft gun fire upon a sound basis of fact which is very comforting to battery commanders and reassuring to the entire service. The hypothetical target-area based upon this experimentally determined danger space has, moreover, a symmetry with regard to the line of fire which should greatly simplify the determination of hits and the observations therefor. Although the system of observation and computation of hits contemplated by the regulations were devised for the former semi-cubical target-area, and are therefore somewhat antiquated, the commendable latitude in training methods allowed organizations in this development stage af antiaircraft artillery has permitted the development and adaptation to the problem of a greatly simplified system of spotting. This system, which it is the purpose of this paper to describe, utilizes the symmetry of the hypothetical target to reduce the number of observations to be made and matched in determining hits, from three for each shot to two for each shot. In doing this it greatly simplifies the two remaining observations and removes the *necessity* for matching observations at all, which is the greatest single source of error.

The great difficulties which attend the spotting of antiaircraft fire are well known to everyone in the antiaircraft service. They may be divided into two classes: (1) inaccuracies of measurements of deviations, and (2) difficulty of matching observed deviations. Whereas the former permit wide variations as to the number of hits reported in a given shoot, according to the skill and care of the observers, the latter, degenerating into a juggling contest among the several batteries, permits such wide and questionable latitude of choice that many battery commanders have come to consider the highest score as evidence of "the biggest liar," as it is sometimes rather inelegantly expressed in

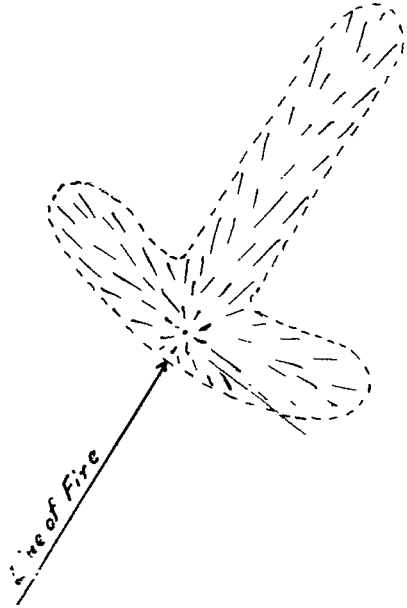

FIG. 1

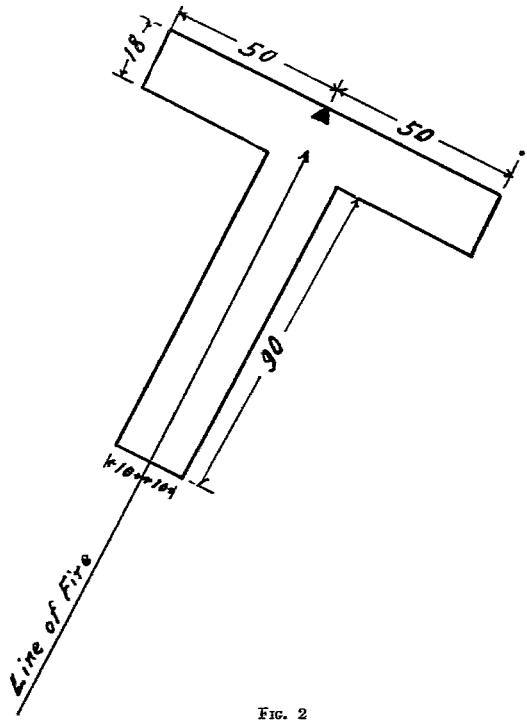

FIG. 2

private conversation, rather than of the best shooting. This condition has for several years cried aloud for a remedy, and some remedial measures have been taken. The excellent progress made with synchronized motion photography toward this end perhaps warrants the conclusion that the problem of proving-ground spotting has been

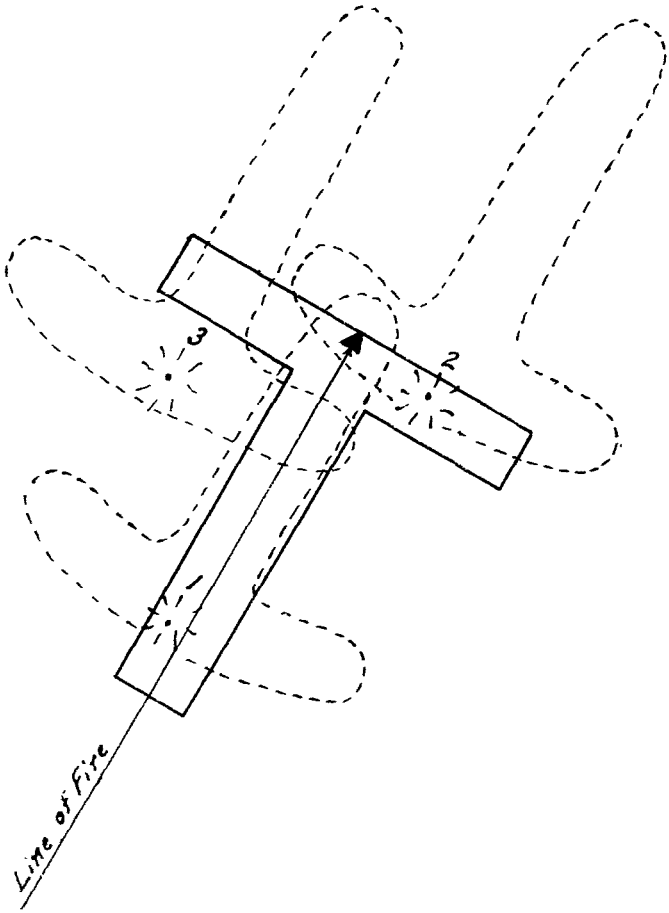

FIG. 3

satisfactorily solved. At the present time, however, this solution is not available to the service, nor will it become available for a number of years if the future is to be judged by the past—even if it is adopted at once. Moreover, it will likely always require supplementing by nonphotographic means.

The system of spotting described below may be adopted and used at once—as it was used by one battery recently. The necessary equip-

ment may be constructed locally and with great ease. The difficulties of inaccurate measurements are greatly reduced by utilizing the axial symmetry of the hypothetical target to eliminate entirely one set of observations, as already noted, and by so organizing the remaining observations that exact readings are taken only where exact readings are required, which is the case in only a small fraction of the shots. The work of the observers is thereby made amazingly simple, and should be correspondingly accurate. The heretofore almost insuperable difficulty of matching observations is wholly removed, and without an effort, by the method of "computing" hits.

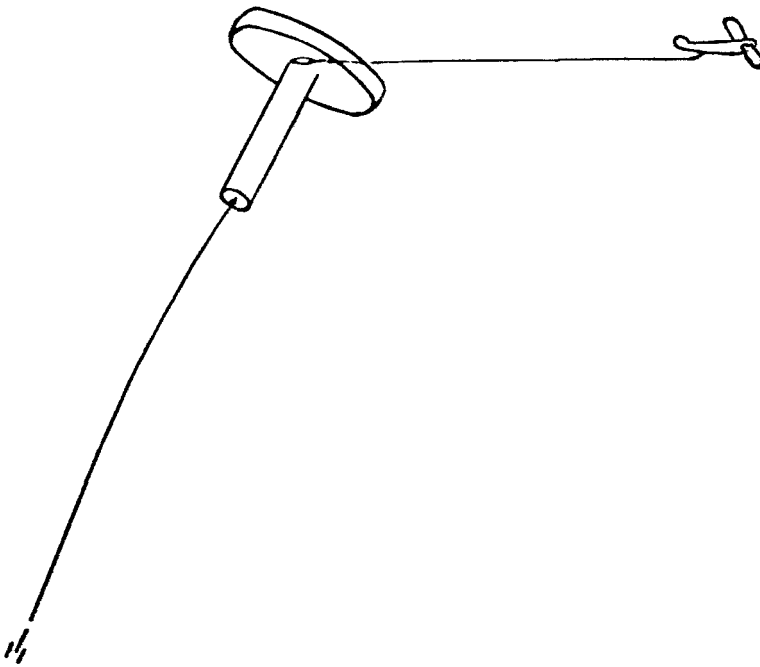

Fig. 4

Since this system of spotting has its chief merits in utilizing to its fullest value the shape and symmetry of the hypothetical target, it is desired that this target be clearly visualized and kept in mind throughout the discussion. Fig. 1 shows schematically a longitudinal section (along the line of fire) of a shell burst. This danger area covered by the burst is, as seen, mushroom shaped, the nose spray of the shell forming the stem of the mushroom, the side spray forming the top. The hypothetical target shown in Fig. 2 is this same danger area reversed. It is also reduced to an exact geometric figure which coin-

cides, for all practical purposes, with the mushroom; the stem of the mushroom becoming an elongated cylinder or column, the top of the mushroom a flattened cylinder or, continuing the architectural figure, the plinth supporting the column. Fig. 3 illustrates the obvious fact that any burst occurring anywhere in the hypothetical target area will include the actual target point T in its danger area. It will be seen that T is in the nose spray of Burst 1, and that it is in the side spray of Burst 2. Although Burst 3 is closer to T than either of the other bursts, none of its danger area includes T. In other words Burst 3 is without the hypothetical target-area and is a miss.

Figure 4 is a schematic space represenation of the hypothetical target towed by the airplane, showing (4b) what the observer at the battery sees and (4a) what the flank observer (either in the plane or on the ground) sees. It is believed that these figures should give the reader, even though technically unfamiliar with antiaircraft firing, a rather exact picture of the hypothetical target and a concise idea of what constitutes a hit on it. For, in order to be a hit, a burst must obviously be observed by both observers as either in the elongated "column" of the hypothetical target, or in the flattened "plinth" or head of the mushroom. In order that this may be done the observations made independently from each viewpoint are divided into three classes: (a) within the "column" or stem of the mushroom, (b) within the "plinth" or head of the mushroom, and (c) without the mushroom altogether. From the viewpoint of the battery, or the *radial* observer, as this observer will hereafter be called, within the stem of the mushroom means within the smaller circle (Fig. 4b); within the head of the mushroom means within the larger circle; and without the mushroom altogether means without both circles. From the viewpoint of the observer in the plane (or a flank observer on the ground) who will now be called the *range* observer, within the stem of the mushroom means within the range zone (Fig. 4a) shown by the dotted lines to extend 108 yards short of the target; within the head of the mushroom, as within the smaller zone shown as extending 18 yards short of the target; and without the mushroom altogether, as without these two zones, either over or short. It may be noted that the range observer need pay no attention to whether a given burst falls within the limits of the hypothetical target as he sees it other than in range, since if it is high or low this fact will be observed by the radial observer. It is this fact which so greatly simplifies his observations. It is also a fact that if hits are to be *computed*, as described below, the range observer *must* regard *only* range deviations and ignore all else.

The instruments with which these observations are made are very

simply constructed or modified. The AA telescope is satisfactory for the radial observer. The modification consists in the introduction of

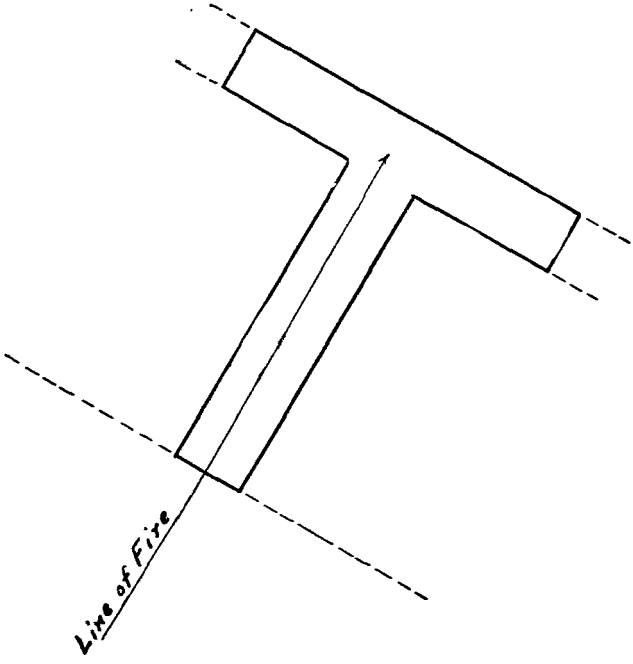

FIG. 4a

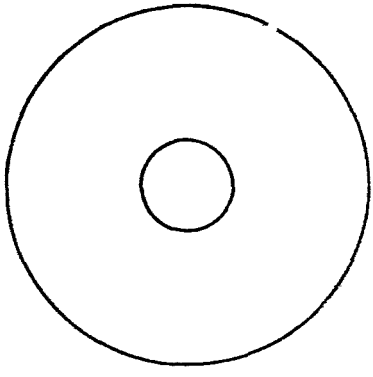

FIG. 4b

a circular mil scale of special construction in the plane of the cross wires. It is shown in Fig. 5. It includes only the 2, 4, 10, 15, and 20-mil rings. This scale would be better etched with fine lines upon

glass, but it is entirely practicable to make it upon clear celluloid with a pair of dividers. On this scale the inner circle of Fig. 4*b*, which defines the stem of the mushroom, is somewhere between the 2 and 4-mil graduations, depending upon the slant range, and similarly the outer circle is between the 10 and 20-mil graduations. The radial observer records all possible "stem" shots (*s*'s) as 2's (which are certainly good), 3's, or 4's (which may or may not be good, depending upon the range). All beyond the 4-ring are recorded as 10's up to and including the 10-ring. These are certainly "head" shots, or *h*'s. Shots between the 10 and 20-mil graduations are recorded to the nearest

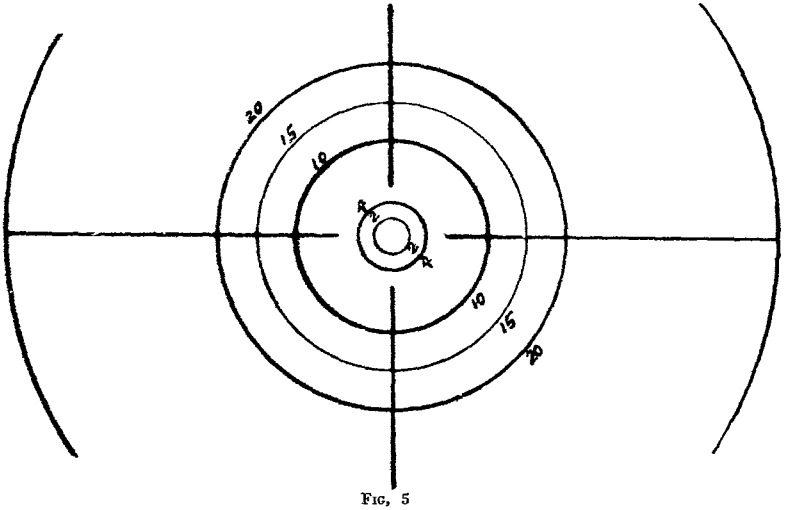

Fig. 5

mil, and shots without the 20-mil ring are recorded as "outs". Afterwards, when the slant ranges have been computed, the 3's and 4's are divided definitely into *s*'s and *h*'s, and the 10—20's definitely into *h*'s and outs. It need not be fancied that each of these readings will be correct to the nearest mil, since the target cannot be tracked with that accuracy. But they should average correct as read, the errors in tracking being such as would compensate one against the other.

The device for measuring range deviations is shown in Fig. 6. It is simply three vertical wires with horizontal wires at top and bottom to hold them in place and with a handle by which the grid may be held at the required distance from the eye (which is 18 inches at the scale shown). The vertical wire T is held on the target and perpendicular to the line of fire. The next vertical wire H, about ½ inch from the first, marks the zone of the head of the mushroom, extending 18 yards short of the target. The third vertical wire S, about 3¼ inches

from the first, marks the range zone of the stem of the mushroom, extending 108 yards short of the target. The range spotter divides his shots into three groups, *h*'s, *s*'s, and outs, as the radial spotter does, except that there are from the first no doubtful shots if the range observer is in the airplane, since in this case the range at which he observes is constant (the length of the tow-line, which is assumed above

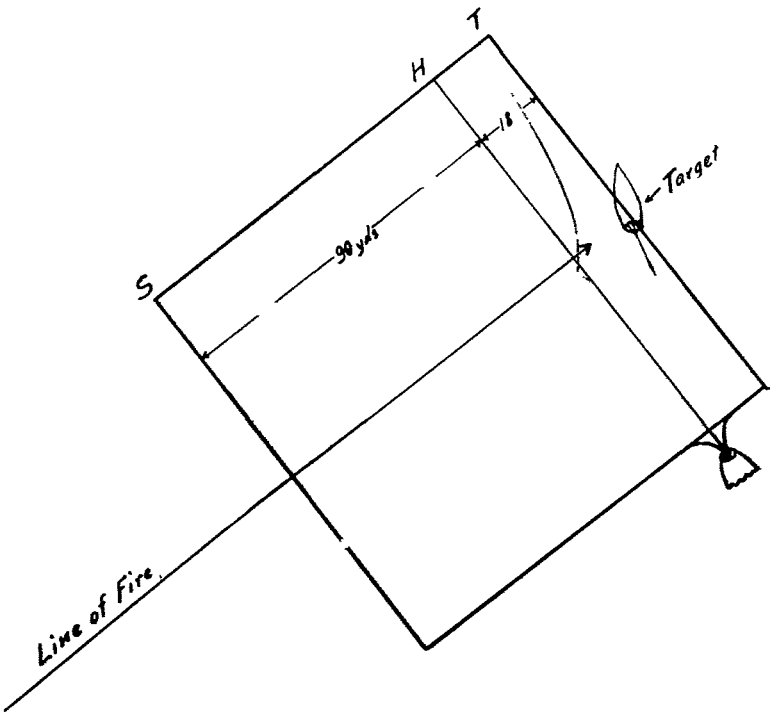

FIG. 6

to be 1800 feet). The range observer must do his own recording, however. He does this by writing down on a pad, securely and conveniently fastened, *h*, *s*, or *o* as he sees each burst and *without taking his eye off the target.* If the number of bursts at near the same time is unusually great he may simply count the total number of *h*'s and *s*'s without reference to their order. Pace tallies may profitably be used to assist in keeping the count, though the number of *h*'s in any given course is usually so small that it may be remembered long enough to write it down after the course. In this case only the *s*'s need actually be counted. It would be difficult to make an error in simply counting these.

The range spotter in the plane should be supplemented by a ground spotter stationed near the vertical plane of flight of the target if practicable. He should have a range rake similar to the airplane observer's grid, or field glasses with such a scale made according to the principles described above for the radial observer. This scale is easily substituted for the mil scale with which the field glasses are equipped. This scale, or the range rake, must, like the radial observer's scale, bear detailed graduations on the border lines of zones to vary with the ranges. This scale is shown in Fig. 7. The system of recording is similar to that used by the radial observer.

From the above it is obvious that any shot which is either in the stem on both records or in the head on both records is a hit. Also shots which are *s*'s radially and *h*'s in range are hits, this small area being common to both head and stem. Shots which are *h*'s radially and *s*'s in range are *not* hits. A shot which is "out" on either record is also necessarily a miss.

FIG. 7

If the range and radial observations for each shot are to be matched in order to determine whether or not that individual shot was a hit it is clear that *all* spots, both range and radial, must be recorded serially, including the "outs". This can easily be done for one gun firing alone. With two or more guns firing together, however, the matching deteriorates from inaccurate to impossible. Accurate matching for two or more guns could doubtless be done through the use of different colored bursts (it appears practicable to make such shells) and duplicate sets of observers for each gun. Range observers in this case would necessarily be on the ground.

A more practicable method of *computing* hits for two or more guns firing at a time, however, is described following. This system is immediately available without added aquipment. It simplifies observing to its lowest terms, for observers need but to count the bursts occurring in the two inner zones of their instruments without regard to their order. The tendency to juggle the spots in order to get favorable combinations for hits is entirely removed, for hits are computed as the number of such combinations that, according to the laws of probability, *should* occur with the given independent observations.

The method of computation, which is indeed simple, is best shown

by example. Suppose that in a shoot of 100 shots the following observations are made—the "outs" being the difference between the total number of shots fired and the numbers counted in the two zones including the stem and head of the mushroom.

	Stem	*Head*	*Out*	*Total*
Radial Observations	20	60	20	100
Range Observations	40	10	50	100

It appears that 80% of the shots are at least within the head of the mushroom radially, and that 50% are at least within the range zone including the stem. (It is considered here that the center of the head is also the base of the stem, this small cylindrical portion being common to both head and stem—or to both plinth and column, expressed in the architectural terms). Of the 20 shots observed as within the stem radially, therefore, 50%, or 10 should, according to the range observations, be within the proper range zone to be hits. And similarly of the 10 bursts observed to be in the head in range, 80%, or 8 should be within the radial area of the head, and should therefore be hits. However, due to the small cylindrical portion mentioned above which is common to both stem and head of the mushroom, the number of hits in this area have been counted twice. According to the tabulated observations it appears that the number of hits in this area is 20% of 10 (of 10% of 20, which is the same thing) or 2. The total number of hits to be counted is therefore 10+8—2 or 16 hits.

This computation is not only easy. It is as logically correct as it is simple. The entire system has been put through the test of actual use in record antiaircraft firing, and found to sustain the claims made for it above. Its more extended use is recommended in the interests of better spotting which will ultimately result in better shooting.

MAXIM XIII

The distances permitted between corps of an army upon the march must be governed by the localities, by circumstances, and by the object in view.—Napoleon's Maxims of War.

The Antietam Campaign

By MAJORS R. R. WELSHMER, G. A. MOORE, M. WILDRICK AND F. SEYDEL

INTRODUCTION

POPE'S campaign in Virginia[1] ended with the withdrawal of the Union forces then consisting of the Army of Virginia and the Army of the Potomac within the defenses of Washington on September 3, 1862.[2]

On September 2, 1862, the Confederate Army of Northern Virginia was concentrated in the vicinity of Chantilly. At this time the Administration was concerned as to the safety of Washington. On September 5, Pope was relieved from command of the Army of Virginia by an informal order which merged that army with the Army of the Potomac. McClellan was placed in command of the combined forces.

Lee felt that he must take the offensive[3] in order to reap the fruits of the victory at Bull Run. He never contemplated, with an army of 55,000 men, any serious threat against Washington. However, he knew that if he remained idle the Federals would reorganize and launch another serious offensive movement into some part of Virginia. He therefore determined upon an invasion of Maryland at this time, preventing such a movement by the Federals, and if successful he hoped to accomplish the following results.

a. Destroy the Baltimore and Ohio Railroad.
b. Push on into Pennsylvania and destroy the Pennsylvania Railroad.
c. Alarm the Federal Government, causing the withdrawal of forces from other quarters for the defense of the Capitol.
d. Relieve the Confederacy of pressure from exhaustion due to invasion.
e. Relieve Virginia from military operations.
f. Support the Confederate Army in Federal territory from a region not yet drained of supplies.
g. To cause Maryland to join the Confederacy, and to obtain recognition of the Confederacy by foreign governments.

For these reasons Lee crossed the Potomac, and his action opened the Antietam Campaign which culminated in the Battle of Antietam on September 17, 1862.

(1) Steele; Palfrey.
(2) RR S 28, p. 590.
(3) RR S 28, p. 590.
(4) RR S 28, pp. 590, 598.

Geography and Terrain[5]

The general course of the Potomac above Washington is from northwest to southeast. Harper's Ferry, at the junction of the Shenandoah with the Potomac, is nearly fifty miles northwest of Washington. Loudoun Heights, the hills at the north edge of the Blue Ridge Mountains, and the Shenandoah River are between Leesburg and Harper's Ferry. Frederick City is in Maryland, forty miles from Washington and a little west of north from it. Baltimore is thirty-five miles northeast of Washington, and Philadelphia is about ninety miles northeast of Baltimore. Thus, McClellan's field of possible operations was, or was likely to be, the quadrant of a circle of which the radius must be thirty miles, and might be four times that.

There are a few difficult fords in the Potomac between Great Falls and Conrad's Ferry, but the river can be forded at many places above Conrad's Ferry in the summer and early fall. The Chesapeake and Ohio Canal runs parallel to the Potomac across the entire theater of the Antietam Campaign. This canal was considered by General George B. Davis to be a more difficult military obstacle than the Potomac River. The only important tributaries of the Potomac on the north side are the Monocacy River and the Catoctin and Antietam Creeks.

The Blue Ridge Mountains cross Maryland in two distinct ranges running north and south. There is a fertile valley between them, six to eight miles in width. The ranges are known as Catoctin and South Mountains. South Mountain is the more difficult obstacle and can be crossed only at its passes, the most important of which are, from north to south, Turner's Gap, Crampton's Gap, and the pass through which the Potomac breaks. South Mountains are a continuous range of hills, and not detached heights.

About three miles west of South Mountain and at its southern end is another short ridge called Elk Ridge which terminates in Maryland Heights. The Heights overlook the Potomac and Harper's Ferry and Command Loudoun and Bolivar Heights on the south side of the Potomac and on opposite sides of the Shenandoah River. Pleasant Valley lies between Elk Ridge and South Mountain.

Martinsburg is on the Baltimore and Ohio Railroad in the Shenandoah Valley about 12 miles from Harper's Ferry—and on Lee's proposed line of communications.

The Baltimore and Ohio Railroad passes through Martinsburg, crosses to the north side of the Potomac at Harper's Ferry, follows the river until it passes through the Catoctin Mountains, then turns north-

(5) Steele pp. 261, 262; Palfrey, pp. 11, 12.

east and, crossing the Monocacy River at Frederick Junction, leads on to Baltimore. In 1862 there were no other railroads within this field of operations.

There were several improved roads in the area. The best known of these was the old National Road running west through Frederick City and crossing South Mountain at Turner's Gap. Ordinary dirt roads, in good condition during September, were available in all directions.

The area contained a good many small towns and villages, of which Frederick was the largest. Generally, the theater of operations was a comparatively thickly settled farming country. When there were mountains, both the heights and valleys were covered with woods, except where cleared for cultivation.

Turner's Gap. The main road from Frederick crosses South Mountain at Turner's Gap. At this point the mountain is one thousand feet high but the gap is only some four hundred feet. On the north side of the road a valley divides the mountain into two crests. The valley is deep where it touches the road but not so much so a mile north. At Bolivar, roads branch to right and left. The right-hand road is Old Hagerstown Road, which passes up a ravine, then to the left along the crest until it enters the Turnpike at Mountain House near the summit. The left-hand road is the Old Sharpsburg Road, which follows a circuitous route to Fox's Gap at the top of the mountain and, about one mile south of Mountain House, descends to the west. Two or three wood roads lead south from this road to the west of Mountain House. The mountains are steep, rugged, thickly wooded, and very hard to climb because of many ledges and loose rocks. There were a good many stone fences, which afforded considerable protection to the defending troops.

Antietam. Between Mercersville on the north and the confluence of the Antietam with the Potomac on the south, a distance of about six miles in a straight line, the Potomac follows a series of remarkable curves. Nevertheless, its general course permitted a line of battle less than six miles long from a point near Mercersville to a point somewhat above the mouth of the Antietam, so that both flanks rested upon the Potomac. This line covered Shephardstown Ford, and the town of Sharpsburg and had its front covered by the Antietam. The Antietam is crossed by four bridges. The one nearest the mouth of the Potomac during the battle was used only by A. P. Hill coming from Harper's Ferry to reinforce Lee. The next was Burnside's Bridge, and is the one by which the Sharpsburg-Rohrersville road crosses the stream. The next is on the Sharpsburg-Boonsboro road, and the last, two and one-half miles further up, is on the Keedysville-Williamsport road. The

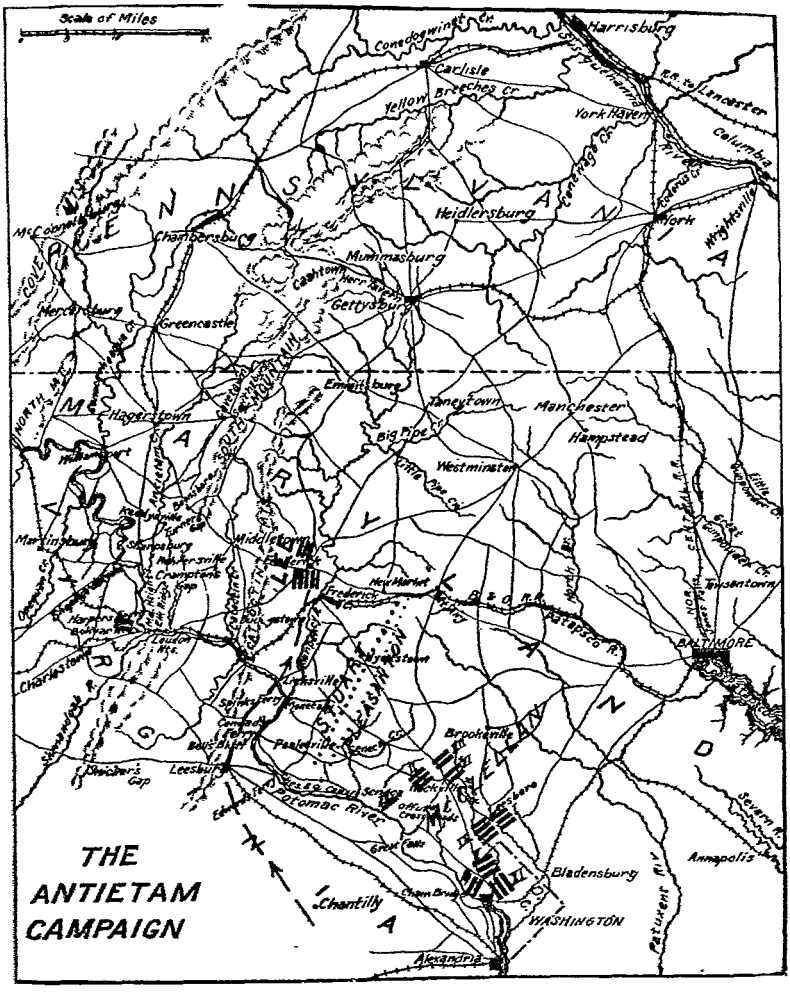
Scale of Miles
Harrisburg
Carlisle
Yellow Breeches Cr.
York Haven
Lancaster
Columbia
Heidlersburg
York
Wrightsville
Chambersburg
McConnellsburg
Mummasburg
Cashtown
Gettysburg
Mercersburg
Greencastle
Emmitsburg
Taneytown
Manchester
Hampstead
Hagerstown
Big Pipe Cr.
Westminster
Little Pipe Cr.
Hancock
Martinsburg
Middletown
Frederick
New Market
Ellicott's Mills
BALTIMORE
Charlestown
Harpers Ferry
Leesburg
Sharpsburg
Boonsboro
Brookeville
Potomac River
Great Falls
Chantilly
Bladensburg
WASHINGTON
Alexandria
Annapolis
Patuxent Riv.
Severn R.
THE
ANTIETAM
CAMPAIGN

Fig. 1

Antietam is sluggish and winding. It had several difficult fords. In rear of Sharpsburg a good road led to the Shepardstown Ford of the Potomac. An important turnpike leads from Sharpsburg to Hagerstown. On the western side of the Antietam the ground rises in a slope of woods and fields to a somewhat bold crest and then falls away to the Potomac. To the east of the Antietam, especially in the center, there was high ground such that, standing among the guns located there, one could look down upon nearly the whole field of battle.

Operations Prior to Battle of Antietam

The Army of Northern Virginia, moving from Leesburg on September 6, went into camp two miles from Frederick, Maryland, on September 7.[6] Here Lee decided that his right flank was too exposed to attack by the Union troops near Washington and accordingly undertook to remove certain Union troops, totaling 12,000, that were then at Harper's Ferry where they would be on his line of communications as he continued his northward movement up the Cumberland Valley with the Catoctin and South Mountains between him and the Washington Union troops.

On September 9, he issued an order directing his army's march on Hagerstown, via Middletown and Boonsboro.[7] Part of General T. J. Jackson's command was to move to the west of Harper's Ferry.[8] Two divisions under General McLaws were to operate against Harper's Ferry from the northeast.[9] One division under General Walker was to operate against Harper's Ferry from the east.[10] After accomplishing their missions, the detached forces were to rejoin the main army at Boonsboro or Hagerstown. This order led to a rather wide dispersion of forces, causing some anxiety to Lee at Hagerstown on September 13.[11] To protect his detached forces in the vicinity of Harper's Ferry, Lee disposed General Stuart's cavalry in the Middleton Valley,[12] and Hampton's and Mumford's cavalry brigades at Crampton's Gap near Burkettsville. He ordered McLaws, upon the completion of his operations, to move north to Sharpsburg.[13]

Lee moved his army on September 15 to Centerville.[14] On this date he sent orders to McLaws to withdraw at once from Harper's Ferry and proceed to Centerville.[15] He likewise provided for the safe move-

(6) RR S 28, pp. 196, 596, 599.
(7) RR S 28, p. 03.
(8) RR S 28, p. 603.
(9) RR S 28, pp. 603, 207.
(10) RR S 28, p. 604.
(11) RR S 28, p. 606.
(12) RR S 28, pp. 606, 608.
(13) RR S 28, p. 607.
(14) RR S 28, p. 610.
(15) RR S 28, p. 610.

ment of his forces to the west and south by establishing guards at the crossings of the Potomac at Williamsport, Falling Waters, and Shepardstown.[16] Union forces on the Frederick-Hagerstown road caused him to engage in the battle of South Mountain all day during the fifteenth of September.[17] Learning that Crampton's Gap had been

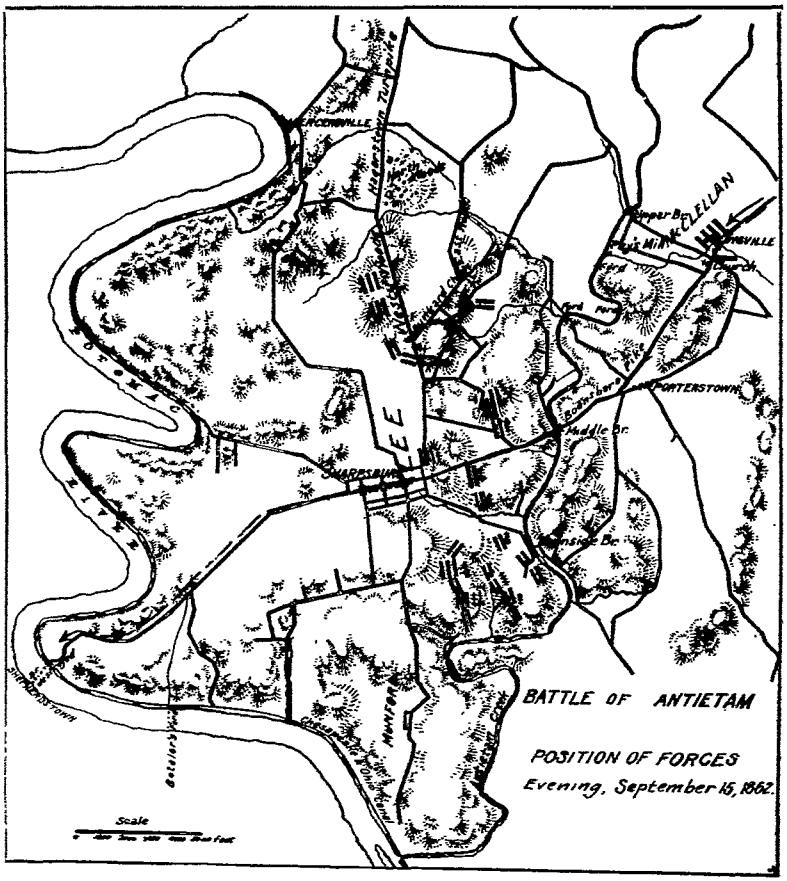

FIG. 2

forced, Lee withdrew during the night to a position at Antietam (Sharpsburg).[18] On September 16, he received word from General Jackson that Harper's Ferry had surrendered.[19] Thus, on the morning of September 17, we find Lee in position at Antietam, weakened by the

(16) RR S 28, p. 610.
(17) RR S 27, p. 140.
(18) RR S 27, p. 140.
(19) RR S 27, p. 140.

absence of the forces detached to capture Harper's Ferry, except Jackson's division which had joined him on the sixteenth.[20]

Pleasonton's cavalry and various detachments at points along the Potomac reported the northward movement of Lee's army covered by Stuart's cavalry.[21] The Army of the Potomac, formed by merging the old Army of the Potomac with the Army of Virginia, was in the vicinity of Washington.[22] On September 5, Halleck, general-in-chief, directed McClellan, now in command of the Army of the Potomac, to move against Lee's army then crossing the Potomac.[23]

McClellan advanced slowly, obeying Halleck's cautions and his own instincts, both men being in doubt of Lee's intentions.[24] On September 9, McClellan was in camp at Rockville, Maryland,[25] while his troops, which had advanced in three columns, occupied positions as follows:

Burnside with the I and IX Corps at Cracklinton;
Sumner with the II and XII Corps at Middlebrook;
Franklin with the VI Corps and a division of the IV Corps at Davestown;
The remainder of the IV Corps under Couch was at the mouth of the Seneca Creek;
Sigel with the XI Corps was opposite Chain Bridge on the South of the Potomac.[26]

McClellan, reassured as to the strength and locations of Lee's army, on September 10 ordered a general advance.[27] On September 11, the advance continued. During the advance, information was continually being received that Lee had departed from the vicinity of Frederick.[28] On September 12, the Union forces entered Frederick[29] and held the line of the Monocacy.[30]

After entering Frederick on September 13, McClellan was given Lee's order, issued September 9, wherein Lee ordered the wide dispersion of his forces, part to capture Harper's Ferry.[31] Accordingly, McClellan moved westward and on September 14 occupied Middletown and Jefferson.[32] On this date, Franklin, in command of the left of the three columns, attacked the two cavalry brigades at Crampton's

(20) RR S 27, p. 141.
(21) RR S 28, pp. 172, 173, 200.
(22) Steele, p. 260.
(23) RR S 28, p. 182.
(24) RR S 28, pp. 169, 201, 212.
(25) RR S 28, p. 219.
(26) RR S 28, p. 220.
(27) RR S 28, pp. 234, 238, 239.
(28) RR S 28, p. 263 *et seq.*
(29) RR S 28, p. 271.
(30) RR S 28, p. 272.
(31) RR S 28, p. 281; Steele p. 264.
(32) RR S 28, p. 288.

Gap.[33] The right column captured the ridge commanding the Hagerstown road (Battle of South Mountain).[34]

On the night of September 14-15, Lee retreated on Sharpsburg,[35] with McClellan in close pursuit. McClellan believed that the Confederate forces were in "a perfect panic."[36] However, on the evening of that day (September 15) he again gained contact with Lee's forces holding a position in front of Sharpsburg. During the morning of September 16, a heavy fog prevented acquisition of knowledge of enemy dispositions.[37]

The Battle of Antietam

To quote from McClellan's own report of the Battle of Antietam, his plan was as follows:[38]

> The design was to create a diversion in favor of the main attack upon the enemy's left—at least to create a diversion in favor of the main attack, with the hope of something more by assailing the enemy's right—and, as soon as one or both of the flank movements were fully successful, to attack their center with any reserve I might then have in hand.

This may be accepted as the plan he probably had in mind and we will see how he carried it through.

The battle was an uncoordinated attack that may be divided into five separate phases. First, there was Hooker's attack on the afternoon of the sixteenth; secondly, Hooker's attack on the morning of the seventeenth; thirdly, Williams' attack with the XIIth Corps after Hooker's repulse on the seventeenth; fourthly, Sumner's attack after Williams, and the attack of French and Richardson about the same time at another part of the line; and, fifthly, Burnside's attack on the Confederate right flank.

The disposition of the forces by nightfall of the fifteenth was as follows: The divisions of Hood, D. H. Hill, and D. R. Jones were in position for battle. Stuart's cavalry covered the left and Munford's cavalry covered the right. McLaws had not yet joined from Harper's Ferry.

The right and center wings of the Federal army had moved forward as far as Keedysville. Franklin with the left wing was at Rohrersville, watching for McLaws.

On the morning of the sixteenth, Jackson had arrived with Walker's division and two of his own. A. P. Hill's division had been left at

(33) RR S 28, pp. 289, 296.
(34) RR S 28, pp. 289, 295.
(35) RR S 28, p. 296.
(36) RR S 28, p. 307.
(37) RR S 28 p. 312.
(38) RR S 27, p. 30.

Harper's Ferry. McLaws, with his division and Anderson's did not rejoin until the morning of the seventeenth.

Battle positions were as follows: Stuart's cavalry covered the extreme left. Jackson's two divisions were on the left of the line. Next were the divisions of Hood and D. H. Hill along the Hagerstown Pike. Longstreet, with D. R. Jones' division and Evans' brigade, prolonged the line to Burnside's Bridge on the right. Walker's division was in reserve behind the right flank and Munford's cavalry covered the right flank.

On the afternoon of the sixteenth, Hooker's corps crossed the creek at the Upper Bridge and a ford near by in an effort to locate the Confederate left. The movement was seen by the Confederates, and Hood's division[39] was pushed forward into the East Woods to meet it. Some fighting took place here, and during the night Hood withdrew while Hooker deployed his corps for an attack the following morning. At daylight on the seventeenth, the attack was launched with two divisions in line (Doubleday's on the right and Rickett's on the left) and one (Meade's) in reserve closely following.[40] Almost immediately, the left of the attacking forces became engaged with a part of Jackson's command that had deployed in a cornfield from the Hagerstown Turnpike across to the East Woods, and Doubleday's division very shortly encountered the Confederate left in the West Woods.[41] Hooker's reserve division was quickly thrown in and the Confederates in the cornfield driven back. Hood[42] promptly came to the relief of the Confederate right; Early's brigade in the West Woods attacked the Union left; and Stuart[43] enfiladed the Northern lines with his artillery from his position on the flank. Hooker's line[44] was forced back after more than an hour of hard fighting. Mansfield's Union corps, which had crossed the creek and bivouacked for the night, started to support Hooker at daybreak, but it was 7:30 A. M. before any part of his force got into battle.

Mansfield was killed early in the action and General Williams, the senior division commander, took command of the corps.[45] Williams deployed his own division on the right and, with Greene's on the left, advanced across the cornfield in the direction of the West Woods. It struck Hood's division, which was supported on its right by three of D. H. Hill's brigades and on its left by Walker's division and another brigade that by this time had come up from the Confederate right.

(39) RR S 27, pp. 216, 223, 923.
(40) RR S 27, p. 269.
(41) RR S 27, p. 270.
(42) RR S 27, p. 923.
(43) RR S 27, p. 819.
(44) RR S 27, pp. 225, 820.
(45) RR S 27, p. 425.

Fig. 3—Battle Positions, Afternoon of September Sixteenth

After two hours of fighting,[46] Williams succeeded in forcing the Confederates back and opened the gap, made by Hooker in the Confederate lines, somewhat wider. Greene's division was in possession of Dunkard's Church and part of the woods near it, but the entire corps was exhausted. Greene's division remained where it was and William's division[47] had to be withdrawn to rest and replenish ammunition. Firing ceased altogether for a time.

About this time, Sumner's corps, consisting of Sedgwick's, Richardson's and French's divisions, was approaching.[48] Sumner succeeded in getting McClellan's permission at 7:20 A. M. to get into the battle, and at 9:00 A. M. he arrived at the head of Sedgwick's division and judging the situation to call for instant action on his part led[49] Sedgwick's division forward in close column without waiting for the other two divisions to come up. He advanced to the assault in close column with a brigade front, with less than thirty yards between his lines of brigades. In this formation he passed out of the East Woods across the cornfield into the West Woods with no security or reconnoitering forces thrown out. Without being aware of it he passed within close range of Early's brigade[50] and Walker's division on his left and was just emerging from the west side of the woods when Early's brigade, which had changed front under cover of the woods, opened fire on the flank of his close column. At the same time the remnants[51] of Walker's two brigades lined up against the left flank of the column and[52] McLaw's division from a position at the left front of the column opened fire at close range. McLaw's division had arrived on the field after a night's march from Harper's Ferry and had been given an hour's rest and then rushed into the Confederate line. The column had not quite finished its deployment when the left front of Sumner's column came before it. Anderson's division, which had come up with McLaws, went to the support of D. H. Hill.[53] Sumner's men, caught between converging fires, fell back to the shelter of their artillery in front of the North Woods, having lost 2200 officers and men in a few minutes. Greene's troops about Dunkard Church were also driven back, leaving the Confederate line practically the same that it had been in the morning, although now held by only scattered groups practically without artillery.

(46) RR S 27, p. 923.
(47) RR S 27, p. 476.
(48) RR S 27, p. 275.
(49) RR S 27, p. 275.
(50) RR S 27, pp. 970, 971.
(51) RR S 27, p. 914.
(52) RR S 27, p. 923.
(53) RR S 27, p. 956.

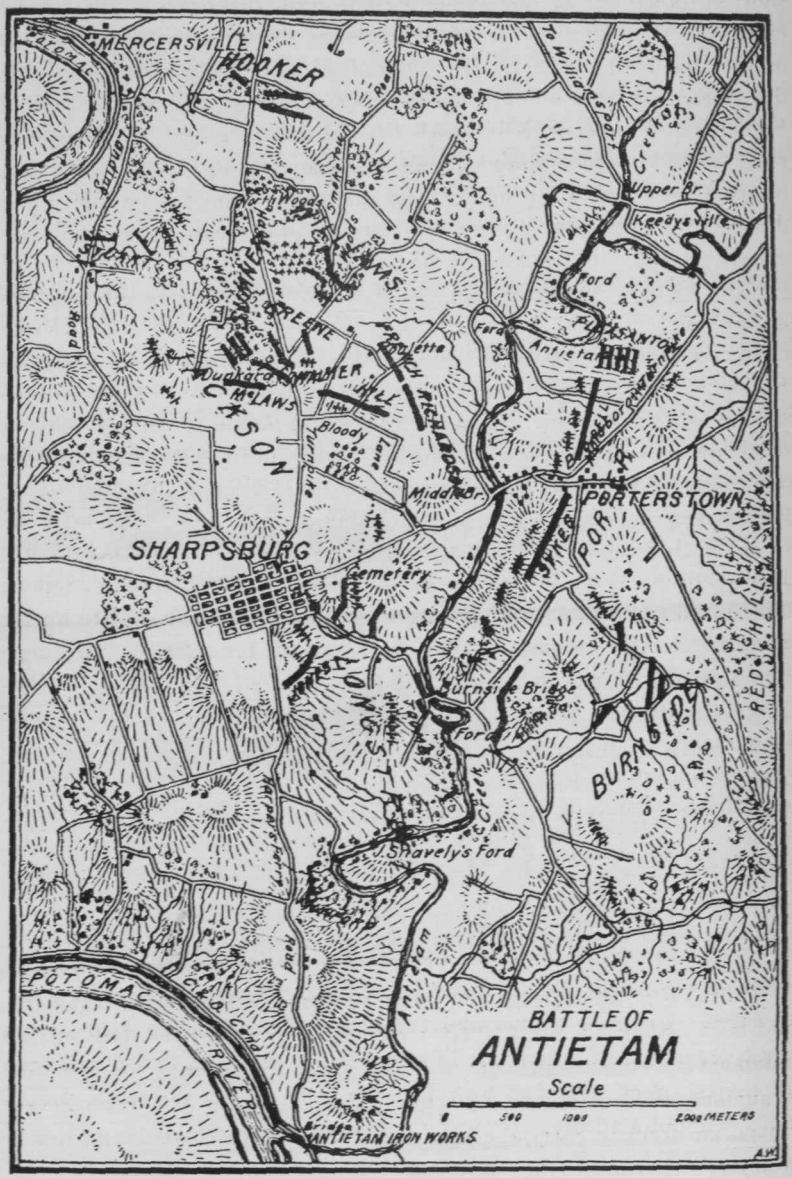

Fig. 4—Battle Positions, Morning of September Seventeenth

Meanwhile, French's division[54] crossed the Antietam by a ford a short distance below the Upper Bridge and, diverging to the south, came into the battle to the left of Greene's division, striking that part of the line held by D. H. Hill near Roulette. Richardson's division, the remaining division of Sumner's corps, came up on the left of French's and together they forced the Confederates back to the sunken road, since known as Bloody Lane.[55] According to Ropes, "The combat that here took place was beyond question the most sanguinary and desperate in the whole war; the carnage was awful; the road was speedily filled with dead and wounded."

The Federal line, extending to the left, reached a position where it enfiladed Bloody Lane and seriously threatened the Confederate right, and the troops at the end of the Confederate line, the 6th Alabama, were ordered back out of the road. When these troops started to withdraw, the whole line broke and fled in confusion, leaving the Federals in possession of Bloody Lane[56] and the adjacent lines to the south of it. The two Union divisions lost some 2900 men, but their losses were fewer than those of the Confederates. Although the Confederate artillery kept up a vigorous fire, the battle was practically at an end on all the left of Lee's line. There were no reserves left in this quarter nor any troops that could have resisted a determined assault. At this moment aggressive action on the part of the Union forces would have won a victory, but no advance was made.

At this time,[57] Franklin's corps, a body of fresh troops, was now in that part of the field.[58] Porter's corps, which formed the general reserve was intact, and Hooker's, Sumner's, and Mansfield's Corps, in spite of hard fighting, were able to do more. Pleasonton's cavalry, since 9 o'clock in the morning, had been idle and was now on the high ground west of the Middle Bridge, and with it were several battalions from Sykes' infantry division.[59] Franklin wished to attack with his fresh troops but Sumner opposed it. McClellan agreed with Sumner.

On the Confederate right Burnside, at 7:00 A. M. on the seventeenth, had been ordered to prepare for the attack. The Burnside Bridge was defended by Toombs' brigade of D. R. Jones' Confederate division and a number of Confederate batteries. About 9:00 A. M., Burnside received an order to carry the bridge and assault the Confederate line.[60] Rodman's division, with one brigade of Cox's division, was given the

(54) RR S 27, p. 323.
(55) RR S 27, p. 1022.
(56) RR S 27, p. 1022.
(57) RR S 27, p. 377.
(58) RR S 27, p. 333.
(59) RR S 27, p. 377.
(60) RR S 27, p. 419.

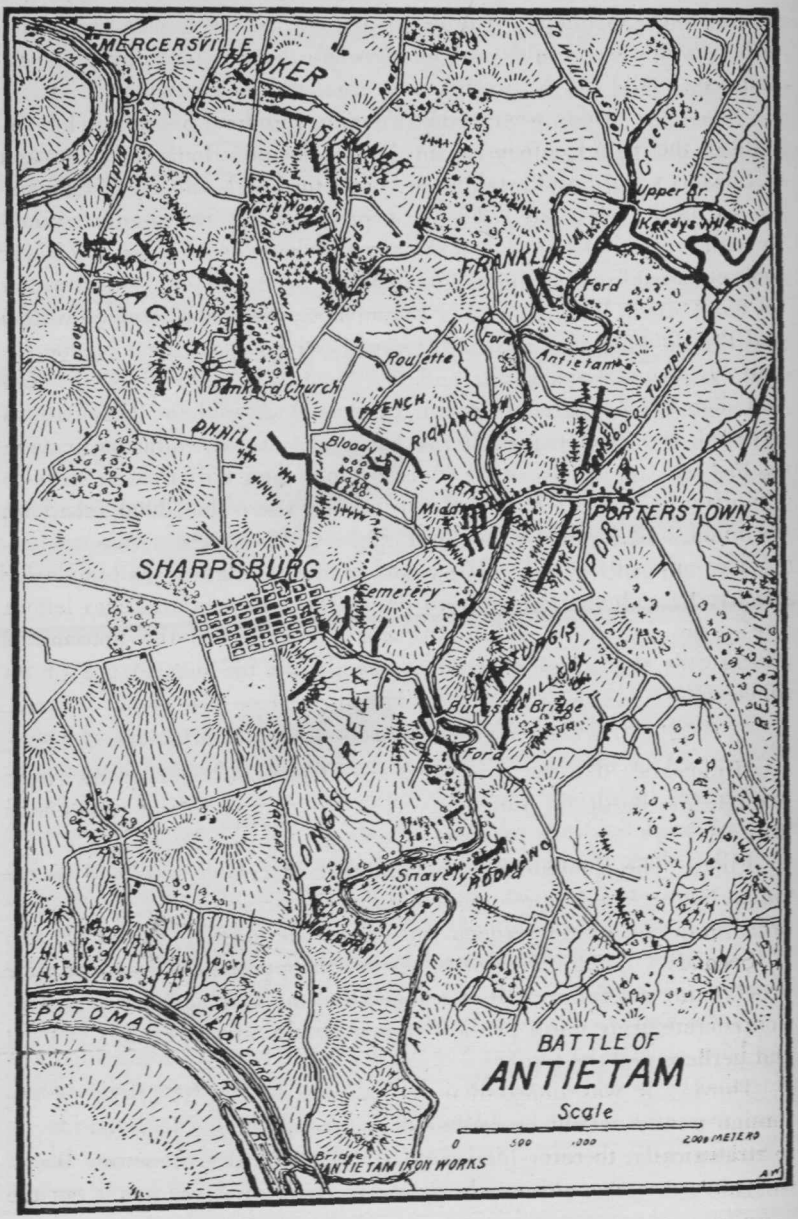

Fig. 5—Battle Positions, Afternoon of September Seventeenth

mission of carrying the Stone Bridge, and Wilcox's division was held in reserve. No attempt was made to ford the creek near the bridge although it was fordable almost anywhere, and it took three assaults and was 1:00 P. M. before the bridge was finally carried.[61]

When the bridge was carried Toombs withdrew his brigade to the right of the main Confederate line.[62] Meanwhile, Rodman had crossed at Snavely's Ford and established connection with the left of Sturgis's troops on the west bank. On the plea of fatigue Sturgis was allowed to withdraw his division, and Wilcox's division took its place. Cox[63] took command of the Union forces on the west side of the stream and set out to form for the attack. The advance was begun at 4:00 o'clock and the Confederates, only 2000 strong, were forced back up the hill into the edge of Sharpsburg.[64] At this time A. P. Hill's division, which had marched out from Harper's Ferry and crossed the Potomac unopposed, arrived unexpectedly on the field and, launching its brigades against the Union left, drove the victorious troops of Cox in more-or-less disorder to the vicinity of the bridge where they bivouacked for the night, and the battle was over.[65]

The opposing armies bivouacked on the battlefield and remained inactive[66] watching each other all day on the eighteenth. That evening, Lee's army began its withdrawal and had recrossed the Potomac at Blockford's Ford, undiscovered by the enemy, by the morning of the nineteenth.

Comments

It appears[67] that the object of General Lee's invasion of the North prior to the Battle of Antietam was in the main political rather than military.

First: The Confederates thought that Maryland was held in the Union by force and intimidation and that the presence of a Confederate army on its soil would perhaps cause that State to join the Confederacy.

Second: A large element in the North opposed the war and were proclaiming it a failure. It was hoped that the presence of a victorious Confederate army north of the Potomac would strengthen this element and perhaps end the war.

Third: It was hoped that recognition of the Confederacy by foreign powers would be furthered as a result of the invasion.

Strategically, therefore, the campaign was offensive in nature. Tactically, however, it could only be defensive, as Lee was not strong enough

(61) RR S 27, p. 419.
(62) RR S 27, p. 420.
(63) RR S 27, p. 420.
(64) RR S 27, pp. 420, 141.
(65) RR S 27, p. 420.
(66) RR S 27, pp. 421. 339, 281.
(67) Steele.

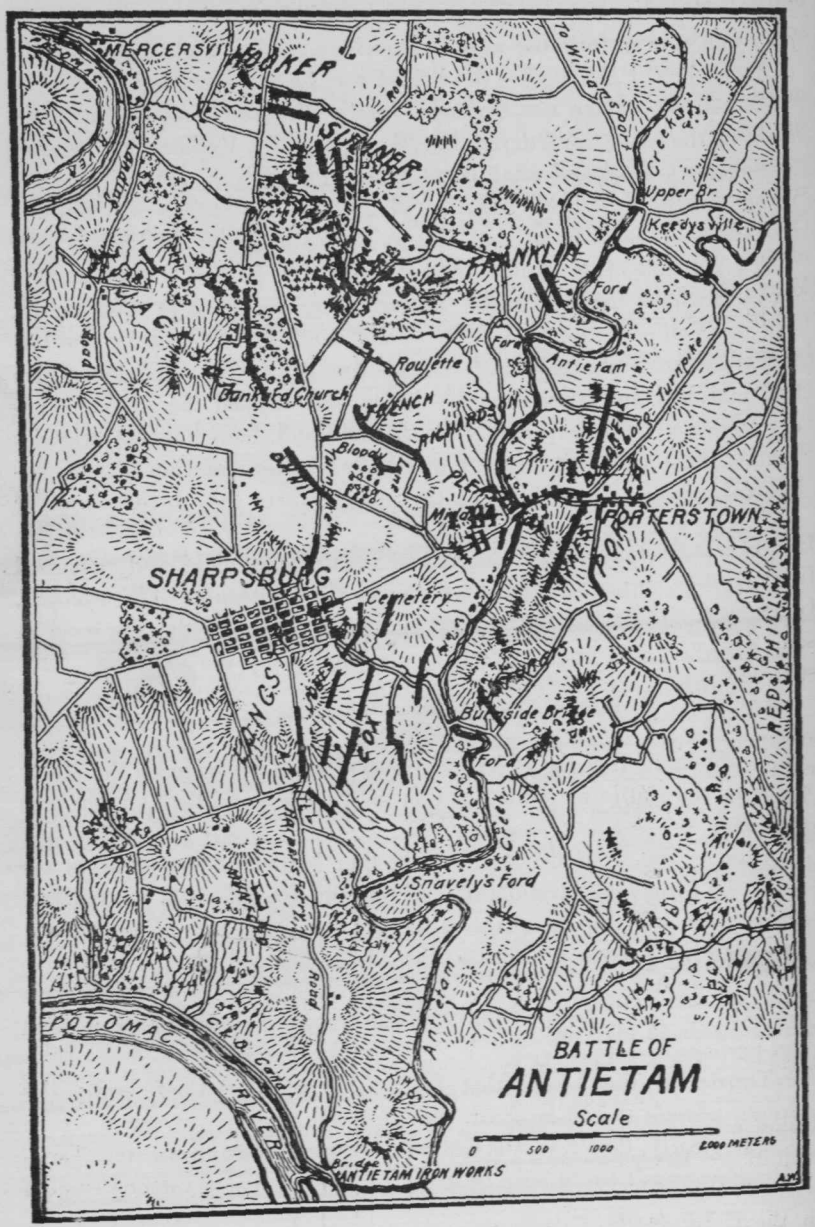

Fig. 6—Battle Positions, About 6:00 P. M. September Seventeenth

to attack the Union forces. His only chance to fight an offensive battle would be if General McClellan should divide his army or commit some other fatal mistake.

It is difficult to say whether Lee was right or wrong in detaching more than half his command to capture Harper's Ferry prior to changing his line of communications to the Shenandoah Valley. It certainly was contrary to one of the fundamental principles of war and had a serious effect on the campaign. Lee says in his report that it was "necessary to dislodge the enemy before concentrating his army west of the mountains," as the Union garrison at Harper's Ferry and Martinsburg were directly on his new line of communications. It would appear to have been safer for the Confederates to keep their forces intact and to live off the country, as General Grant did later in the Vicksburg campaign, than to separate their army in two parts by rivers and mountains, so that neither part could go to the assistance of the other in case the Union army attacked one part with all its strength.

While the Union garrison at Harper's Ferry would interfere with the line of communications, it was not strong enough to jeopardize the line of retreat by that route. It is interesting to note that later, in the Gettysburg campaign, Lee's communication and retreat ran by this same route through the Shenandoah Valley while Harper's Ferry was still held by a Union garrison.

Accepting the theory that Harper's Ferry had to be captured before advancing north, it would appear to be a safer plan to have marched via Crampton's Gap instead of Turner's Gap, thus keeping the two parts of the Confederate army within supporting distance of each other and leaving no road open by which the Union army could get between the divided forces.

It is hard to speculate what might have happened if Lee had not detached the expedition against Harper's Ferry. Even with that garrison out of the way, it cannot be seen how the Confederates could penetrate far into Pennsylvania.[68] Staunton, 150 miles in rear, was the nearest railhead, and such a large army could not be supplied over so great a distance by wagon trains alone.

Lee had 55,000 men with little chance of reinforcements, while the Union army numbered 90,000 with strong reinforcements on the way to join it. McClellan was marching straight at the Confederate line of retreat[69] and if Lee had remained at Hagerstown or gone farther north in the Cumberland Valley, the Union army could easily have been thrown across his rear and cut off his retreat.

(68) Alexander.
(69) Steele.

The truth of the whole matter appears to be that Lee was emboldened to divide his forces on account of the leisurely way McClellan was following him and the belief that he could reunite his army before the arrival of the Union forces. This probably would have been possible had not McClellan come into possession of a copy of the order for the whole operation, which clearly showed him the dispositions of the Confederate columns.

McClellan, however, was not altogether to blame for his slow and cautious pursuit. True, he believed the Confederates had 120,000 men and was correspondingly careful. But the telegrams he was receiving hourly from General Halleck in Washington would have held him back even if he had been inclined to move faster. Halleck says General Franklin "could not divest himself of the notion that Lee was about to play the Union army some slippery trick by turning its left, getting between it and Washington and Baltimore, and then taking each city by a coup de main." There were, however, in Washington, enough troops to hold that city against Lee's army, even if McClellan's forces had been removed from the matter altogether.

Fortunately for McClellan, a Union soldier found a copy of Lee's order for the operations against Harper's Ferry at Frederick on September 13. It was wrapped around three cigars and was picked up on ground where the Confederates had camped. The signature was recognized as genuine, and it checked with the reported location of the Confederate forces. Seldom in war has a commander been so favored by luck, yet McClellan was slow to take advantage of his good fortune.

Now was the time for extra exertion, as the march so far had been easy. If, instead of resting the night of the thirteenth, the Union army had been pressed forward, it would have reached Turner's Gap by daylight, brushed away Stuart's small cavalry forces and D. H. Hill's two brigades, and have been in possession of the pass long before the arrival of General Longstreet's command, and well before D. H. Hill could have brought back his advanced troops from Boonsboro. If there had been any battle at all at South Mountain, it would have been a small affair.

Similarly, Franklin's corps did not reach Crampton's Gap[70] until noon of the fourteenth and did not succeed getting through it much before dark, although it was only defended by Munford's cavalry brigade and some troops from McLaws' command. Had Franklin reached here earlier and attacked with more vigor he might have saved

(70) Ropes.

Harper's Ferry and should have handled McLaws' command, much smaller than his own, very roughly.

Instead of these possible successes, Harper's Ferry surrendered on the fifteenth, and General McLaws, without molestation, withdrew across the river to that town. Franklin, having failed to save Harper's Ferry and having allowed McLaws to escape, should have been ordered to rejoin McClellan at once. It was not, however, until the night of the sixteenth that he received the order and then was directed to leave Couch's division to hold Maryland Heights, for what reason is not apparent.

If General McClellan had pushed his entire army through the mountains promptly, he would have had his whole command united on interior lines between the separated parts of the Confederate army.

After the Battle of South Mountain,[71] Lee was allowed to escape, and by the afternoon of the fifteenth was behind Antietam Creek. The distance from Turner's Gap to Antietam Creek is not ten miles, yet it was not until the afternoon of the sixteenth that Hooker's Corps moved against the Confederate left flank. What was the reason for the piecemeal attack it is hard to say, unless it was intended as a reconnaissance in force to locate the Confederate left. What it did, however, was to show Lee where the Union army proposed to make its main effort and enabled him to place his forces accordingly.

The Confederate position behind the Antietam was bad due to the fact that scarcely two miles behind it lay an impassable canal and river, while the only line of retreat ran by the right flank to a difficult ford three miles away. Lee could probably have crossed the Potomac without serious opposition. Politically the invasion had been a failure, but Lee apparently thought that public sentiment in the South required that he should win a victory north of the Potomac.

Tactically, the field of Antietam was suited for a defensive battle, except that the right flank was in the air and could have been turned or enveloped. There were woods, ledges, stone walls, uneven ground, and sunken roads, all of which were used by the Confederates to good advantage for cover. Sharpsburg contained many brick buildings which increased its defensive strength. The Antietam, although bridged at four places and fordable nearly everywhere, was nevertheless a considerable obstacle.

The Confederates had a comparatively clear field of fire for their infantry, although it was generally narrow and was obstructed in some quarters by high corn and woods. The artillery positions were fairly good, but were commanded by Federal batteries along most of the

(71) Steele.

line. The position could have been greatly strengthened by intrenchments and there was ample time to dig them. The ground was not suitable for cavalry charges on account of walls, fences, and ledges of rocks.

Ropes remarks, "Of General Lee's management of the battle there is nothing but praise to be said." He might have added, says Steele, "of General McClellan's management there is nothing but censure." In the first place, no adequate reconnaissance was made to find out the position occupied by the Confederates, where the creek could be forded, etc. When the attack was made it was made piecemeal. In fact there were five separate and distinct attacks by detachments, instead of one single attack by the whole army with a general reserve held back to throw in at the critical moment. If all the corps engaged in these attacks had assaulted Lee's line at the same time it would not seem possible for him to escape defeat. By the time Franklin's corps marched to the field from Pleasant Valley on the seventeenth, the Confederates were well nigh exhausted. Ropes states that McClellan had some 24,000 men who had not been seriously engaged. If these troops had been led across Antietam Creek by the fords near its mouth and hurled against the Confederate right, Lee's line of retreat by the way of Boteler's Ford would have been cut. Steele states "that the main Union attack should have been made against this flank of the Confederate position."

General George B. Davis, in his review of the campaign, says, "The management of the Army of the Potomac was halting, dilatory, wanting in firm direction, and to a degree irresolute and unskilful." On the other hand, Steele says, "From beginning to the end of the campaign, the Confederate commander's conduct was characterized by boldness, resolution, and quickness."

MAXIM X

When an army is inferior in number, inferior in cavalry, and in artillery, it is essential to avoid a general action. The first deficiency should be supplied by rapidity of movement; the want of artillery, by the nature of the maneuvers; and the inferiority in cavalry, by the choice of positions. In such circumstances the morale *of the soldier does much.—Napoleon's* Maxims of War.

Our Merchant Marine

By MAJOR F. L. HOSKINS, C. A. C.

THE use of waterways for transportation is as old as the human race. Water routes have exercised an ever-increasing influence on the progress of civilization. They are the only ready-built highways provided by nature. The earliest civilizations were developed near navigable waters; the water provided the best means, and frequently the only means, of rapid and easy movement from one place to another. In our own day, the number of large American cities which do not have ready access to navigable waters may be counted on the fingers of one hand.

It has been said that the progress of civilization goes hand in hand with the progress of transportation. Until the building of steam railroads was begun in the last century, all large-scale transportation had been confined to the water. The greater part of the commerce of the world has always been water-borne; all signs indicate that it will remain so in the future.

The merchant marine is the shipping engaged in commercial transportation. The term "deep-water," as commonly used to describe shipping bound to or from foreign ports, is not well chosen. Ships sailing between New York and San Francisco or between the latter port and Honolulu pass over much deep water, yet their voyages are called coastwise.

In any general discussion of the American Merchant Marine, the historical background is bound to occupy an important place. The history of our merchant marine covers a period of time as long as that of the nation itself and adds to the national history many of its most illustrious pages. It is a history in which all Americans can take pride.

The Pilgrims found in New England a rigorous climate, a barren soil, and no readily accessible mineral wealth. The land was bountifully supplied with timber suitable for ship-building, and the off-shore waters teemed with edible fish. Under these conditions, the construction and operation of ships soon became the two foremost industries in the colonies of New England. In the colonies of the South a more favorable climate and a rich soil led to the development of agriculture as the leading industry.

The ships of New England were generally built and operated as a community adventure. Fishing voyages were soon followed by trading

voyages on which the salt and dried fish were exchanged for the products of the other colonies. As larger ships were built, the New Englanders ventured to the West Indies, to Europe, and to the western coast of Africa. Before the close of the Seventeenth Century, the shipping of New England was the cause of apprehension in the shipping circles of Old England. Trade was no longer confined to the products of the forest, plantation, and sea; new sources of profit had been found in the transportation of rum and negroes.

The wars of the Seventeenth and Eighteenth Centuries, between England on the one hand, and France and Spain on the other filled the middle Atlantic with French and Spanish privateers. Their numbers were augmented by other ships of prey carrying no flag at all. The line of demarcation between privateer and pirate was sometimes hard to find. All of them were a menace to the colonial ships out of sight of port. In those days merchant ships carried defensive armament as a necessary part of their equipment. The innumerable engagements between merchant ships and privateers or pirates were not always decided in favor of the latter.

Despite the difficulties encountered, the New England shipping increased rapidly. Just before the outbreak of the Revolution, the fleet consisted of more than 600 ships. Nantucket, alone, sent out 125 whalers in 1770. Nearly every creek and cove along the settled portions of the New England coast had its ways for the construction of ships.

The Americans were therefore well prepared to harass English shipping on the Atlantic during the Revolution. The American navy did not amount to much during the war, for it sustained many losses and experienced great difficulties in obtaining new ships and crews. Privately owned ships were armed and commissioned as privateers. Since the prizes they took belonged to the captors and not to the Government, service on the privateers was eagerly sought. By the close of the year 1777, American privateers had captured 733 English merchant ships and had made prisoners of war the more than ten thousand English seamen composing their crews. The loss of the crews was a more serious handicap to the English than the loss of the ships, for the personnel of their merchant marine was a reservoir from which was drawn replacements for their navy. It is only fair to add that during the same period about nine hundred American merchant ships were captured by the English.

At the end of the war, the New England shipping had been greatly reduced, even though much new construction had been carried on during the war. The English were determined to prevent the resur-

rection of American competition in the ocean carrying trade, and, to this end, closed the ports of England and of the English-owned islands of the West Indies to all ships not registered under the English flag. Before the war, about a third of all English ships had been built in the colonies on account of the cheapness of timber. After the war, the English prohibited the registry of any American-built ship under the English flag. These measures fell with great severity on the merchant marine of the new nation, and hit hard blows at the West Indies as well. The islands of the West Indies had become the distributing center of the slave trade. The importers in the islands depended largely on corn and dried fish brought from the colonies of the mainland to feed the large numbers of slaves always on hand. With the West Indian ports closed to American ships, some fifteen thousand slaves were lost through starvation. Retaliatory measures undertaken by the American Confederation were futile, for the colonies were jealous of one another and of the central government and would not cooperate in any scheme proposed or undertaken. Each was eager to trade with English ships and to prevent the other colonies from doing so. The English ships were able to do a thriving trade in all American ports, while American ships were not allowed to enter English ports. The Confederation was moribund and the American merchant marine was in a desperate plight.

The adoption of the Constitution in 1789 gave new life to the nation by providing a strong central government with full control of foreign commerce. The New England traders undertook with great zeal and energy the task of regaining lost ground. While before that time trading voyages had been confined to the Atlantic and the waters adjacent thereto, voyages were now made to the Orient and to the islands of the Pacific. Larger ships, better suited to the longer voyages were built. In 1789 the *Massachusetts*, a ship of 600 tons, was launched at Quincy. She was the largest ship ever built in America up to that time.

The war of 1812 caused a temporary set-back to the expansion of our merchant marine. This was fought by America with the popular slogan of "Free trade and sailors' rights." Trade was not free to us because the ports of England and the European mainland were closed to American ships. Napoleon had proclaimed a blockade of the British Isles, and while it was a paper blockade, the French seized any American ship which was known or suspected to have entered a British port. The English countered by blockading the remainder of Europe, and did their best to make their blockade effective. The American trade with Europe was caught between the millstones and

ground very fine. That part of the slogan referring to sailors' rights was a cry for relief from the English practice of forcibly removing sailors from American ships for service in the English Navy. The English at that time did not permit their nationals to transfer allegiance to a foreign flag, and they claimed that the persons removed from American ships were English citizens. They were not particular, however, in the exercise of their claims, and hundreds of Americans had been forcibly abducted. At the same time press-gangs worked openly in the English coast towns securing recruits for the royal navy by similar methods. As sailors in the navy were seldom paid or granted shore leave, and received the most wretched food, accommodations, and treatment on the ships, voluntary recruits were seldom obtained. Such service, under whatever name, was slavery, and Americans, as well as the English, were not willing to be slaves. By such radical means England managed to maintain its navy and, with it, to preserve its existence as a nation in the face of the Napoleonic menace. With the disappearance of Napoleon from the European stage in 1814, the impressment of sailors was discontinued. It is hardly necessary to add that this policy had aroused strong opposition throughout England, as well as in America, and had been the object of heated denunciation in Parliament.

The close of the war of 1812 was followed by a great expansion of American shipping. New England was no longer to hold a monopoly of our carrying trade; New York, Philadelphia, and Baltimore became busy centers of ship building. As the trade with the West Indies was still forbidden to American ships, and remained closed until 1849, new trade routes with the Orient were developed.

Shortly after the war the first transatlantic liners were built. These were the famous packet ships, designed to carry on in the most severe weather. They left port on scheduled time, and for more than a generation carried the cream of the passenger and freight trade with a regularity that was not surpassed by steam vessels until the middle of the century. Their average time of crossing the Atlantic was about sixteen days. The fastest packet crossing on record was made in thirteen days by the *Dreadnaught* in 1859.

It is a matter of interest that this period which saw the American merchant marine at its zenith saw also the beginning of its decline to oblivion. One of the reasons for the decline was the increasing reluctance of Americans to ship as sailors. Before the war of 1812 nearly every boy living on the coast looked forward to a voyage or two almost as a matter of course; this attitude changed after the war. The packet service had much to do with this change; the service in the

North Atlantic was disagreeable because of the cold and stormy weather encountered and because the ships were driven night and day during the passage. Another reason for the change of attitude was to be found in the growing industrialization of the country, especially in the North. Again, the westward migration had begun. All tended to make the population of the coastal regions look away from the sea. As a result, the packet ships carried crews of Dutchmen, Swedes, and Liverpool packet-rats. The ships' officers were always Americans. Their experiences with the foreign crews, who were generally of a lower grade of intelligence than American sailors, and the exigencies of the service required leadership of a driving sort that obtained the desired results but in doing so became famous, or rather infamous. A good mate on a packet ship might not be a good navigator but he had to be ready and willing to use his fists or a belaying pin to maintain the strict discipline then in fashion. Sailors came to be considered little better than animals and to be treated accordingly. Under such conditions, the average American preferred not to be a sailor.

While the packet ships continued their dominance of the transatlantic service, the beginning of steamship service was made by England in 1840 when Samuel Cunard began operations with a fleet of four vessels. He was able to compete with the packet ships by securing valuable mail contracts from his government and with the aid of subsidy of $425,000 a year. An attempt to meet this challenge in steam was made in 1850 by one of the packet ship owners, who built four fine steamers, faster than any of the Cunarders then afloat. This line was given a subsidy by Congress at first, but for political reasons the subsidy was withdrawn in 1855. The loss at sea of two of the steamers and the withdrawal of the subsidy caused the bankruptcy of the company. With its failure, the dominance of the Atlantic, so long held by the packet ships, passed definitely to the British steam lines.

The era of the clipper ships began at the close of the war of 1812, as did that of the packet ships. The clippers were the outgrowth of efforts to build very fast ships for use as privateers in that war. They were designed with very fine lines, resembling racing yachts more than the usual merchant ship. In them, cargo space was sacrificed to the demand for speed. Despite their fineness of line, they were seaworthy ships, and they carried the American flag proudly on the seven oceans. The clipper ships were never used to any great extent on the transatlantic trade routes; they were employed principally in the trade with India, China, and the East Indies. With their superior speed they commanded the highest freight rates and were in such great demand that the English carrying trade with the Orient was quite eclipsed.

The discovery of gold in California was followed by a rush of gold-seekers, not all of whom intended to use pick, shovel, and washing pan. The rush lasted several years, part of the people going overland and part by water, either around Cape Horn or trans-shipping at Panama. Most of the trade between California and the Atlantic coast was carried in clipper ships. Fevered competition was the order of the day and great profits accrued to the faster ships. An excellent picture of this trade is given in Stewart Edward White's *The Grey Dawn,* one of his trilogy on the life in California in the early days.

While American clipper ships were skimming the cream of the world's carrying trade outside the Atlantic and carrying the flag into every port in the world, the English were attempting to build clipper ships that would outsail the American ships. This they succeeded in doing before 1860. The arguments about the relative merits of American and English clippers have not been ended yet; the protagonists of each still write many letters to the newspapers in support of their contentions.

The increasing use of steam vessels and the panic of 1857 combined in sounding the death-knell of our sailing ships. Freight rates dropped to an unprofitable level, and the American sailing fleet had difficulty in surviving the three or four years preceding the Civil War. America had not yet been converted to the advantages of steam, and it was about to lose its high place in the carrying trade of the world.

The Civil War marked the dividing line between two eras in the annals of our merchant marine. Before the war the American flag was a common sight wherever cargoes could be procured or delivered. After the war, the flag was seldom seen in foreign ports except on an occasional warship.

The change from sail to steam was marked in the 60's. The English, having unlimited quantities of steam coal mined close to deep water, and with superior facilities for iron-working, were not slow to seize the advantage offered by American reluctance to use steam. Their mastery of the sea was not to be challenged again until a full generation later, when the Germans began pressing them hard.

The American sailing fleet was swept from the sea during the Civil War by the Confederate commerce raiders and by the fear which they inspired. Most of our deep water ships were transferred to foreign registry to get the protection they could not get from the Federal navy. The disappearance proved to be permanent, for there was no tendency to build up the merchant marine after the war. Perhaps the deciding factor in this was the vast westward migration which followed the war. Horace Greely was advising young men to go West, and they went, with

their families and relatives, their live stock, poultry, and farming implements. The transcontinental railroads were being built, and a new empire was in process of development. Capital was needed everywhere, and high rates of interest were offered. With such unlimited markets for investment, capital no longer turned to the sea for an outlet. The old pioneering and adventurous spirit of the nation looked to the western frontier, where formerly it had looked to the sea. The prairie schooner had supplanted the square-rigged ship as a symbol of national aspiration and growth.

This period of eclipse of the merchant marine lasted until 1918. Its extent can best be illustrated by recalling that it was necessary to charter foreign ships to move our troops to Cuba and the Philippines in 1898, and that the battleship fleet which made the cruise around the world in 1907 depended on ships of foreign registry to keep it supplied with coal during the cruise. As a nation we were not interested in having American ships to carry American goods; we were quite satisfied if George would do it for us. George, in this case, was England and Germany.

The German submarine campaign carried a threat of starvation to the population of the British Isles and of defeat to the allied armies in France. A contribution asked of America soon after our entrance in the war was the building of the greatest possible amount of cargo tonnage. We started with little in the way of shipyards or skilled labor, but made up for the lack of both by our determination to produce ships regardless of cost. Under governmental supervision, shipbuilding became, in the course of a few months, one of the major industries of the country. Fabricated steel ships, wooden ships, even concrete ships —all were turned out at a rate previously thought impossible to serve as spans in the "Bridge to France." The interned German ships were seized, repaired, and altered for use as troop transports. A number of neutral ships, kept in American ports to escape the German submarines, were taken over also.

The Armistice found us with a vast amount of ocean tonnage in operation and a large number of ships still under construction, many of which were later completed. These war-built ships were designed for ease of mass production and not for economy in operation. This should be remembered. The cost to the nation of its great fleet of merchant ships was roughly three and a half billion dollars.

In the last five years we have laid down or contracted for some two hundred thousand tons of ships of two thousand gross tons or over, practically all of which are for use in the coastwise trade. During the same period, the figures for Great Britain and Germany are 4,600,000

tons and 1,350,000 tons, respectively. It is worth noting that Germany has about the same amount of ocean tonnage now that she had in 1914, and that at least seventy per cent of her tonnage is in ships built since the war on designs especially prepared to meet the keenest competition in the carrying trade. Our ships are generally uneconomical, of high first cost, and otherwise unsuited for such competition. Our passenger ships are as fine as any in the world, but are handicapped by having to operate under prohibition rules and regulations. Our freight lines, using war-built ships, are being crowded out by foreign lines using modern, efficient ships. Our government-owned fleet consists of 280 ships engaged in foreign trade and 500 ships laid up. We have 170 privately owned ships engaged in foreign trade, many of them of the tanker type.

Registration, inspection, clearances, and general supervision over all shipping are functions of the Department of Commerce, which has a wide spread and efficient organization for handling matters under its jurisdiction. The United States Shipping Board, a separate bureau of the Government, was created by the act of September 7, 1916, as an agency through which the problems of shipping were to be handled and the war powers of the United States in the field of water transportation were to be administered. The Emergency Fleet Corporation was organized during the war by the Shipping Board, with capital provided from the Treasury, to build or buy and operate ocean shipping. It built the Hog Island yard where many of our ships were constructed during the war, and has operated lines to all parts of the world. It is now called the Merchant Fleet Corporation, and its functions are to administer the government-owned fleet. Operation of the government-owned ships is turned over to privately owned companies as far as possible. Generally, the terms of lease or sale of the ships include the provisos that the lines on which the ships were operating must be maintained for a period of five years and that the ships must be kept under the American flag. Government ownership and operation have not gone uncriticized; even the President, in his last message to Congress, made uncomplimentary references to the activities of the Shipping Board.

The effect of legislation on our merchant marine has always been the subject of bitter controversy. Of late years, the focus of attack has been the LaFollette Seaman's Act. It is a common statement in shipping circles that the requirements imposed by this Act have made it impossible for our ships to compete on even terms with foreign ships. Without going into the details of this act and other legislation drawn along similar lines, it may be said that the purpose of the legislation is

to provide for the safety of the ships, their passengers, crews, and cargoes, and to provide for the crews a standard of living in harmony with American ideals. It may be questioned whether the raising of the standard of living alone will result in such increased efficiency as will compensate for the additional cost of operation; a business so decentralized may not be able to furnish the expert management required under such conditions. If this is the case, then our shipping, under present laws, is in a situation similar to that of the English coal mines, where too conservative management can find no way to cut costs of operation except by reducing wages. The large industrial organizations of this country, such as the Ford Motor Company and the United States Steel Corporation should be better examples to follow.

It may be asked why we need a merchant marine at all. We are becoming more and more dependent on foreign trade, on broadening the markets for our manufactured goods, and on obtaining the raw materials necessary to our well-being and vital to our national defense. Our exports of farm and forest products, of oil and other minerals, and of manufactured articles amount in value to approximately five billion dollars a year, and we import goods valued at about the same amount. The cost of carrying our foreign trade is roughly seven hundred fifty millions a year. When our exports are carried in foreign bottoms, they do not always receive the preferential treatment accorded the goods of the nation whose flag the ship flies. If we are dependent on foreign shipping, any dislocation of that shipping affects our foreign trade, and we are thus dependent on factors over which we exercise no control. It is estimated that a nation should carry at least sixty per cent of its foreign trade in its own ships, if it desires to be on the safe side. We are now carrying about thirty-two per cent of our foreign trade in American ships, and the percentage is decreasing yearly.

Our merchant marine, in time of war, would be a reservoir of personnel for the Navy, and would furnish the supply ships needed for both the Navy and the Army. Merchant ships, if suitable as to speed, could be used as commerce raiders; many of the fast British ships would undoubtedly be so used in any war between Great Britain and a maritime power. We would have very few ships that could be spared for this purpose.

The question may be answered more concisely by quoting from the Act of June 5, 1920, the announced policy of the United States: "It is necessary for the national defense and for the proper growth of its foreign and domestic commerce that the United States shall have a merchant marine of the best equipped and most suitable types of

vessels sufficient to carry the greater part of its commerce and serve as a naval and military auxiliary in time of war or national emergency . . . . It is declared to be the policy of the United States to do whatever may be necessary to develop and encourage the maintenance of such a Merchant Marine." The Shipping Board was directed by this Act to keep this purpose and object in view as the primary end to be attained.

The future of the American Merchant Marine is problematical. We have more capital than any other nation, but our capital finds more profitable investments than in the shipping game. We are not yet committed to governmental ownership and operation, and the tendency at present is away from rather than towards putting the government into the business permanently. We have shuddered at the mention of ship subsidies since Civil War days, although the shudders are not so violent now as they were before the World War. Many schemes which are, in effect, only sugar-coated subsidies are being advocated, but are believed to have small chance of adoption. When capital turns to the sea of its own accord, we shall once more have a merchant marine worthy of America's place among the nations of the world.

MAXIM XV

The first consideration with a general who offers battle should be the glory and honor of his arms; the safety and preservation of his men is only the second; but it is in the enterprise and courage resulting from the former that the latter will most assuredly be found. In a retreat, besides the honor of the army, the loss of life is often greater than in two battles. For this reason, we should never despair while brave men are to be found with their colors. It is by this means we obtain victory, and deserve to obtain it.—Napoleon's Maxims of War.

The Military Situation of Canada

By LIEUTENANT PAUL W. GEORGE, C. A. C.

THE military forces of the Dominions of the British Empire owe their existence to the South African War. This war proved to the world generally, and what was more important, to the Dominions themselves, the fact that the various military forces maintained in the Empire have one ultimate object—Imperial defense. Local defense is but a part of the whole problem of Imperial defense. In the event of an enemy attack on any portion of the Empire, it is hardly conceivable that the defense of that part will ever be left to local forces alone. A threat against any part is a threat against the whole, and against such a threat the whole resources of the Empire must act together.

The military problem before each Dominion is that their military forces must be able to take their place in the Imperial Army as easily and efficiently as the Regular or Territorial Armies of Great Britain. To attain this object there are three general essentials: first, identity of organization and equipment; second, identity of doctrine and training, and third, mutual understanding and confidence.

Two important stepping stones in the development of the military forces of the Empire were the Imperial Conferences of 1907 and 1909. As a result of these conferences, the necessity was put forward, and in principle generally accepted, of the uniformity of organization and training throughout the Empire, and for similarity in military stores and equipment. At the same time Canadian officers were sent to England to attend the Staff Colleges, and also an exchange between British and Canadian officers was commenced.

In 1910 Canada requested Great Britain to inspect her military resources and recommend the manner these resources could best be applied under the principles which had been agreed upon at the Conferences. This inspection was carried out by the late Lord French. The recommendations contained in the subsequent report were generally accepted by Canada, and on them were prepared the military organizations which were put to the supreme test in 1914.

If the Imperial Military preparedness of 1914 is compared with the situation of 1899, vast progress must be noted. This advance is still more striking when it is realized that the great proportion of the measures undertaken to insure this coordination of military effort was in the five years immediately preceding the Great War. As one item for

comparison, in the South African War, the First Canadian Contingent, consisting of one battalion of infantry, embarked at Halifax one month after war was declared. In 1914, the First Canadian Division with reinforcements, total strength 30,500, including in higher command and staff a number of Canadian officers trained in England, embarked at Quebec seven weeks after the declaration of war.

In 1905 Canada had a definite and clearly defined military policy, which policy is in force today. The military forces consisted of the Permanent Corps and the Canadian Militia.

The Permanent Corps maintained the Headquarters, Command and District Staff, acted as instructors to the militia, maintained the standard of military knowledge in the country, and furnished permanent garrisons for the two Imperial Naval Bases in Canada, at Halifax and Esquimalt, and the garrison for Quebec. It consisted of 250 officers and 2500 men.

The Canadian Militia was divided into the Active Militia and the Reserve Militia. The Active Militia, in case of emergency, was to provide the first line of defense of 100,000 men to be immediately available. The Reserve Militia, to consist of the male population of the Dominion between the ages of 18 and 60, would form the second line of defense. Provisions were made for raising and organizing this Reserve Militia, which was to consist of another 100,000 men.

The Peace Establishment of the Active Militia was to consist of 60 per cent of the War Establishment, or about 60,000 men, and was to be trained for a period of twelve days each year. In 1913 it consisted of 3500 officers and 40,500 men.

The units to make up this first line were allotted among the various provinces according to: first, the proportion of population in the different provinces; second, their characteristics and aptitude for mounted or dismounted services; and third, the general line of preliminary mobilization. Canada was divided into Military Districts for this purpose.

In 1911, following the inspection by the late Lord French, the Militia was reorganized on a divisional basis of six divisions, and Divisional Areas replaced the Military Districts. At the same time the duties of the militia were agreed upon as three: the maintenance of civil order, the defense of the frontier from aggression, and the organization of an expeditionary force for other parts of the Empire in event the Dominion Government decided to follow the example of the South African War.

From 1911 to 1914 the Canadian General Staff gave a great deal of attention to the plans for the organization and the dispatch of an

expeditionary force if such should be necessary. It was apparent to the British Government, who had kept the Canadian Government informed, that the European situation was likely to reach a climax at any time. Regulations for the general mobilization of the Canadian Militia were worked out and issued to all concerned in 1913. The preparation for the expeditionary force consisted in the selection of certain units and sub-units of the militia to form an expeditionary force of one division and a cavalry brigade.

Years of thought and preparation were thrown away by Sir Sam Hughes, who took hold of the mobilization in August, 1914. Orders were sent out from Ottawa to officers commanding units and sub-units, and even to individuals, to mobilize and to proceed to Valcartier. The Divisional Areas were not consulted and they had no knowledge of the military movements that were taking place except what they could gain by hearsay. The militia units were not used. Canadian militiamen, ex-militiamen, veterans of other wars, and ex-professionals of the Permanent Force responded. As a body they had no discipline, but were gradually formed into the First Canadian Division.

At the end of the war the Canadian Expeditionary Force units, particularly those that served at the front, commenced to inquire about what their future would be in the new peace establishment. Would they be incorporated into the Canadian Militia preserving their traditions or would they have a final funeral?

Pressure from the Canadian Expeditionary Force decided the government to take steps to investigate how the units of this force could be perpetuated to preserve their identity and traditions within the militia. Their incorporation in the militia was to be in such a way as not to increase the size of the militia to any great extent. A committee was appointed which drew up a war organization for Canada, including units of the Expeditionary Force, which was approved by the Government.

Some of the outstanding units of this new organized militia were—

123 Battalions of infantry,
34 Regiments of cavalry and mounted rifles,
62 Batteries of light field artillery,
16 Batteries of heavy and siege artillery, and

also Engineer, Signal, Ordnance, Army Service, and Medical Services. It was to have a peace establishment of 127,514 men. On June 30, 1926, its actual strength was 49,000 and, owing to the shortage of funds, only 27,000 were trained for nine days for the year 1926-1927.

In addition to these, the Permanent Force was reconstructed and some new units added, namely, the Princess Patricia's Canadian Light Infantry, the Royal 22d Regiment, and the Royal Canadian Machine Gun Brigade.

The Union Government went out of power in 1921, and the present government has been so faced with the necessity of economy that it has not considered the question of military policy to any great extent. However, it has formed the Department of National Defense, and the Royal Canadian Air Force has been put on a permanent basis.

The air service has a director and three assistant directors charged with: first, air staff and personnel; second, supply and research; and third, civil operations. The air service consists of four squadrons, one wing, and one photographic section, each of these units being stationed in different parts of Canada. At present, the work of the Air Force is almost exclusively devoted to civil operations, such as photography in connection with the preparation of maps, and forest fire patrols.

Canada has a General Staff consisting of a Chief of Staff, a Deputy Chief of the General Staff, Director of Military Operations and Intelligence, Director of Military Training, Director of Physical Training and Cadet Service, Director of Historical Section, and a Staff Officer Artillery.

The Branch of the Adjutant General consists of an Adjutant General, Director General of Medical Services, Director of Organization and Personal Services, Director of Pay Services, and Director of Records.

The Branch of the Quartermaster General consists of a Quartermaster General, Director of Engineer Services, Director of Supplies and Transport, and Director of Equipment and Ordnance Services.

Canada has been divided into seven Military Districts which replace the Divisional Areas of 1911. Each military district has one officer as District Commander, a General Staff officer, and an officer as Assistant Adjutant and Quartermaster General.

The officers for all branches of the Permanent Force and the Royal Canadian Air Force are educated at the Royal Military College of Canada at Kingston. Vacancies are allotted, according to population, to the respective Provinces, and are filled in order of merit obtained by candidates, between 16 and 19 years of age, in yearly examinations. The length of the course is four years, in four terms of about ten months each. The total cost of the course, including accommodations, board, uniforms, and instructional materials is about $1500.

In practically every university and college there is now in existence or under organization a contingent of the Canadian Officers' Training

Corps, having a strength of about 112,000. The purpose of this Corps is the training of leaders to occupy places in the militia.

Canada now maintains a Royal Canadian Navy consisting of two depot ships, two destroyers, and four mine sweepers. Half of this force, that is, one depot ship, one destroyer, and two mine sweepers, is kept at the naval base at Halifax and the other half at the naval base at Esquimalt. A naval reserve force of 1500 officers and men is maintained and trained in and by Canada.

The total appropriations made by Canada for the Defense Forces, which include all three services, for the period April 1, 1927, to March 31, 1928, was $15,900,000. Of this amount, the Active Militia receives $2,500,000, the Permanent Force $5,500,000, the Air Force $4,500,000, and the Naval Service $2,500,000.

In closing, a few of the present needs of the Canadian Military Forces should be considered.

First, a definite policy is needed concerning the Permanent Force with respect to its duties and distribution so as to provide proper barracks accomodations. At present a large part of this force reside in very delapidated quarters.

Second, a policy to form a well-balanced force. They are short in the aggregate of many of the different branches of the service, particularly artillery, engineers, and signal.

Third, a definite policy regarding armament, ammunition, and arsenals. They are short of small arms, machine guns, guns and howitzers. A greater production of ammunition should be adopted, as the reserve is inadequate.

Fourth, the Reserve Militia is practically unorganized. Schemes for the organization of this militia should be considered and an efficient one adopted.

MAXIM XII

An army ought to have only one line of operation. This should be preserved with care, and never abandoned but in the last extremity.—Napoleon's Maxims of War.

General Scott's Landing at Vera Cruz March 9, 1847

By Major H. W. T. Eglin, C. A. C.

General Situation

FOLLOWING the admission of Texas into the Union in December, 1845, General Taylor was ordered to advance to the Rio Grande sometime in January, 1846. It was late in March when he reached the Rio Grande. Mexico looked upon this as an invasion of Mexican territory by an armed force of the United States and regarded it as an act of war. This led to the war with Mexico at that time.

During 1846, General Taylor was in constant contact with Mexican forces, always with success, but the general result did not point toward a decisive victory which was necessary to end the war. It became quite evident then that the proper way to effect the conquest of Mexico was not to seize the capital by marching down from the Rio Grande but to take the most practicable route to the interior, which was along the line from Vera Cruz to the City of Mexico. The advance along this line might be more fiercely contested, but the line was much shorter and, in spite of the mountains, much more practicable.

Following out this plan General Winfield Scott, who was the senior officer of the United States Army was placed in command of the expeditionary force and given the mission to seize the capital of Mexico, by way of Vera Cruz.

Operations

On January 1, 1847, General Scott arrived at the Brazos and began to collect the troops destined for the invasion. He had authority to draw 4000 regulars from General Taylor's army, and ten new regiments of volunteers were to be raised and sent to him with all possible dispatch. He communicated with Comodore Connor, in command of the United States Fleet stationed at Anton Lizardo, a few miles down the coast from Vera Cruz, and informed him that the transports would rendezvous at the island of Lobos, 120 miles up the coast from Vera Cruz. Commodore Connor was requested to provide for handling and berthing the transports on arrival, to conduct them when assembled to Anton Lizardo, to look out for the vessels arriving direct from New York and other ports with boats, artillery, and provisions, and to select a suitable place for the landing.

There was some delay while waiting for the transports, but in February they began to arrive at the Brazos and Tampico. The ships were loaded as they arrived and sent to the rendezvous at Lobos Island. On the second of March, although all the troops had not reached the rendezvous, the fleet sailed for Anton Lizardo. The whole force amounted to about 12,000 men, and was organized while at the rendezvous into two divisions, under Generals Twiggs and Patterson, the former composed of regular, the latter of volunteer troops. The fleet reached Anton Lizardo on March 6.

In the meantime other ships had arrived from the United States bringing a supply of surf-boats, siege material, provisions, and means of transportation.

For this landing the government had ordered 300 surf boats built on a design furnished by Mr. Charles Cramp of Philadelphia. Only 186 of these boats were delivered and of these but 67 were actually used in the landing. The boats were fashioned after the model of those used by the New England fishermen and were built in three sizes so that they would nest together by removing the thwarts. They carried from seventy to eighty men each and were shipped to Mexico on the decks of schooners. Prior to the landing they were launched and calked and provided with oars and gears by the Navy.

On the seventh of March, General Scott and Commodore Connor reconnoitered the shore, the city, the fortress of San Juan d'Ulloa in a small steamer. The landing place selected by Commodore Connor, a smooth sand beach abreast the island of Sacrificio about two miles below the city, was approved by the military commander. This reconnaissance drew fire from the guns of San Juan d'Ulloa.

The anchorage at Sacrificios being too small to accomodate all the transports, it was decided to transfer as many as possible of the troops to the larger Navy ships. This was done, and on the morning of the ninth, between eleven and twelve o'clock, the fleet weighed anchor at Anton Lizardo. Two hours later the ships anchored in close order at Sacrificios. The weather was perfect and the breeze favorable. The surf boats, sixty-seven in number, were hauled alongside the ships and the men were passed into them. As each boat received its complement, it shoved off and was held at a little distance by the sailors at the oars until the formation was complete. General Worth's regular brigade was selected for the first line, in number about 4000 men.

Two Navy gunboats and five gun schooners were anchored abreast of the beach to cover the landing. Shortly before sunset the flotilla pulled for the beach, which was reached without opposition and without

loss. By 10:00 P. M. the whole force, about 12,000 men, was safely landed.

Conclusions

The landing at Vera Cruz is an example of the value of hearty co-operation between the Army and the Navy, in which full use was made of the assistance of the latter. The management of the transport fleet after rendezvous was entirely entrusted to the naval commander, as was also the handling of the landing boats, which were rowed by sailors.

Although preliminary orders for the landing were issued by General Scott at the rendezvous at Lobos Island, practically all the preparations were made under the eyes of the enemy at Anton Lizardo. Had the

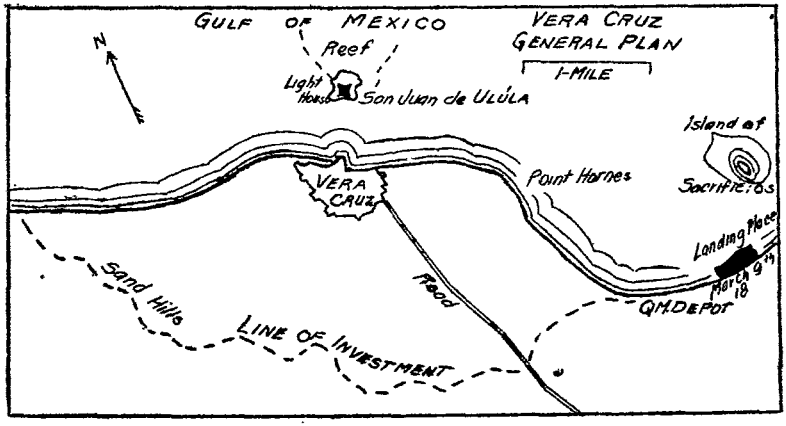

Fig. 1—Sketch Showing Landing Position

enemy been active, advantage would have been taken of this as well as the reconnaissance in broad daylight on the seventh and the deliberate preparations for the landing on the ninth. Most landings have been accomplished with more dispatch, at least so far as the first line is concerned, and at an earlier hour of the day.

It was fortunate for our forces that the enemy was inactive, for there was ample time after the arrival of the fleet at Sacrificios to have moved a superior force to the point of landing.

The weather encountered evidently did not call into play the peculiar qualities of the surf boats.

Another point forcibly illustrated is that, although this operation resulted in a simple debarkation, it was planned and carried out as a forced landing, and as such it conformed to the general and established rule of ships to avoid permanent works and fixed fortifications. At

the conference on the plan of attack, some of General Scott's younger and more spectacular officers urged that the fort, San Juan d'Ulloa, be stormed by direct assault, but his wisdom was proven by his landing on the beach in the rear of the left flank.

Furthermore, it establishes the fact that the methods employed in landing operations have changed very little since 1847. Troops landing on a beach must leave the boats in water not deeper than waist high. To accomplish this the boats must be of shallow draft, small enough to be maneuvered by oarsmen if necessary and conveniently carried by transports.

Captain Henderson, U. S. N., in a recent discussion on this subject, gives the description of the approved design of a boat whose construction has been authorized. It is called the Navy Beetleboat. It has a flat bottom with double keels which act as runners when the boat is rammed upon the beach. It is motor-propelled and protected with special bullet steel which costs one dollar a pound, but since the boat weighs over 5000 pounds ordinary steel will be used.

It is not believed, however, that such boats can be expected in sufficient quantities to meet the requirements of a quick mobilization and a prompt dispatch of an expeditionary force, so it might be well for us to visualize the utilization of the present-day equipment, which has changed so little since General Scott's successful landing at Vera Cruz.

MAXIM VII

An army should be ready every day, every night, and at all times of the day and night, to oppose all the resistance of which it is capable. With this view, the soldier should always be furnished completely with arms and ammunition; the infantry should never be without its artillery, its cavalry, and its generals; and the different divisions of the army should be constantly in a state to support, to be supported, and to protect itself.

The troops, whether halted, or encamped, or on the march, should be always in favorable positions, possessing the essentials required for a field of battle; for example, the flanks should be well covered, and all the artillery so placed as to have free range, and to play with the greatest advantage. When an army is in column of march, it should have advanced guards and flanking parties, to examine well the country in front, to the right, and to the left, and always at such distance as to enable the main body to deploy into position.—Napoleon's Maxims of War.

Coast Forts of Colonial Rhode Island

ROGER WILLIAMS, an ardent young minister at Salem, was banished from Massachusetts toward the close of 1635; and in the following January he and five others proceeded to the head of Narragansett Bay, where he purchased the site of Providence from Canonicus, chief Sachem of the Narragansett Indians. Here he laid the foundation of the present State of Rhode Island. The community became one of religious toleration and prospered wonderfully, being rapidly settled by emigration from Massachusetts. Portsmouth was founded in 1638, Newport in 1639, and Warwick in 1643. Serving under the motto *Amor vincit omnia,* Williams and his followers lived in almost perfect amity with the Indians; and during all the early years of its existence, the colony was but little disturbed. Military organizations and coast defenses were at first considered unnecessary, and it was many years before attention was turned to the construction of coast forts, although Williams maintained a fortified trading-house, mounting two guns, on Goat Island. This house was purchased by Richard Smith in 1651.

With the close of the seventeenth century, rumors of war in Europe induced military activity throughout the colony, for, unlike most of the American colonies, Rhode Island was prone to take the European wars seriously. When news of the declaration of war by England against France and Spain finally reached this country, hostilities were proclaimed in each town, and defensive action was taken.

In 1701, the General Assembly for the Colony of Rhode Island and Providence Plantations authorized the appointment, at a "reasonable salary," of an officer to take charge of the fortifications and to enforce the shipping laws. The slight defenses existing at the time were deemed inadequate to the defense of the harbor, so, in May, 1702, the General Assembly enacted "That . . . there shall be a fortification or battery built at the charge of this Collony, in some convenient place near the harbor of Newport, aforesaid, sufficient to mount therein twelve pieces of ordnance, or cannon."

Goat Island was selected as the site of the new fort, which was called Fort Anne until the death of Queen Anne, when it became Fort George. To support and repair the fort, the Governor and Councils were authorized to use all money, goods or wares forfeited to the general treasury, particularly gold plate and money taken from con-

victed pirates. In Newport, a battery was erected close to the water's edge in front of the house of Benedict Arnold, who had been governor in 1677-78.

In 1705, one hundred pounds were appropriated "towards the finishing of her Majesty's fort, viz: Fort Ann, with the citadel therein, &c." The following year, four hundred pounds were appropriated "for the further building, repairing and rectifying and finishing her Majesty's Fort at Goat Island, alias Fort Island, in the township of Newport, and £100 for a magazine for said fort."

In 1706, extraordinary precautions against invasion were taken and practically every man in the colony became a soldier or participated in some capacity in the defensive arrangements. A strong French fleet was at that time operating in the West Indies, and was expected all along the Atlantic freeboard. Fort Anne was completed and well garrisoned, scouts were scattered along the coast line of Rhode Island, and a permanent garrison was maintained on Block Island.

As time passed without event, precautions were relaxed, and Fort Anne was allowed to deteriorate. In 1714, following the treaty of peace, the garrison at the fort was reduced, and the military expenses were materially curtailed. By 1715 it was reported that the fort had "gone much to Decay and almost every thing therein out of Repair and that all sorts of Ammunition and Stores are wanting, to furnish the same for Defence; especially at a time when War seems to threaten us."

Small appropriations made in 1719 and 1721 for the repair of the fort helped but little, and a new structure was found necessary. An address to the King, made in 1727, recited that "a regular and beautiful fortification of stone, with a battery" capable of mounting fifty cannon, had been built at Newport; and a petition, inclosed with the address, requested thirty 18-pounders and ten 12-pounders with which to arm the fort, the colony undertaking to provide the ammunition.

The General Assembly appears to have drawn upon its imagination or upon its hopes in describing the new fort, for in 1728 we find Fort Anne "requiring a considerable Sum for the finishing thereof," and in 1729 we find an appropriation of five hundred pounds with which "To lay the platform, make the gates, and work up what lime and stone and other materials there are now procured." The work, however, progressed under the annual appropriation acts of the colony; and by 1735 the fort was finished, although not fully armed, at a cost of ten thousand pounds. A second petition for cannon, forwarded to England, was, as usual, referred to the Board of Trade. In this petition, the fort is called Fort George, a name which appears in the colonial

records first in an act passed in 1732 for keeping in order and preserving the works of the fort and disposing of material remaining after the completion of the work.

The threat of hostilities with Spain in 1732 undoubtedly had much to do with hastening the completion of Fort George, for the colony, unquestionably excited over the possibilities of conflict, appropriated four thousand pounds in 1733 for repairs, "Fort George lately built by this Colony for its defence being now in a weak and defenceless condition by not having sufficient Cannon and Ammunition suitable for such a fort, and for Want thereof said Fort is rendered entirely useless."

The change in name would indicate the construction of an entirely new fort, but Fort George was really the old Fort Anne, enlarged, strengthened and renamed. When completed it was a regular work of stone and mortar, much larger than its predecessor, and in which additional guns were from time to time mounted. By 1740, "Our fort is now provided with thirty six cannon, well mounted and furnished with a suitable quantity of military stores."

When news of the outbreak of war with Spain reached the Colony in 1740, the General Assembly met in special session for the purpose of putting the Province on a war footing. Fort George was given a garrison of fifty-two men under Colonel George Cranston; stores were provided; and the works were prepared for defense. Troops were sent to New Shoreham and Block Island, the latter place having a battery of six heavy pieces. Along the coast were erected seven watch towers from which the several towns were required to maintain a constant watch over the avenues of approach. To complete the preparations for coast defense and to convey intelligence of the approach of any hostile vessels, five beacons were established upon commanding heights from Block Island on the south to Portsmouth on the north. In 1741, Fort George was enlarged sufficiently to mount ten more pieces of artillery, and a new powder magazine of brick was constructed.

The entry of France into the war in 1744, by declaration of war upon England, was viewed with alarm in Rhode Island, and additional activities were undertaken for the purpose of making the defenses of the colony more secure. The garrisons at Fort George and on Block Island were augmented, and a company of artillery was raised in Gloucester. A battery under Fort George was ordered enlarged so as better to mount two pieces. Military stores were procured, and eighty barrels of powder and fifteen hundred pounds of musket balls were ordered. An old tonnage duty of six-pence a ton upon all arriving vessels (three-pence only for vessels engaged solely in coastwise traffic) was revived for the support and maintenance of Fort George during the

continuance of war. The watch tower and beacon at Point Judith and Beaver Tail were reoccupied. Finally, a petition was sent to the King requesting artillery and stores. The garrison kept at Fort George varied in strength from time to time, and appears to have been reduced to about eight men; but it was increased to thirty in 1745, a strength which it kept until 1848 when it was again reduced to eight.

In September, 1746, news of the great armada of France reached America, and great alarm was felt in all the colonies. In Rhode Island, the General Assembly voted more than two thousand pounds "towards the completing the new works, and the alteration of the old battery adjoining to Fort George, at Goat Island, and already begun." Stephen Hopkins, George Brown, Job Randall, and Walter Phettiplace signed a minority report objecting to this appropriation on the ground that the works were already sufficiently strong to resist privateers, and that no new works that could be added would suffice for defense against a strong hostile fleet. At this time, Fort George mounted thirty-seven heavy guns—twenty-five 24-pounders and twelve 18-pounders.

In 1747, Walter Chaloner was appointed captain of the fort, but in 1748, when news of the armistice reached the colony, the garrison at the fort was reduced. Captain William Munford relieved Chaloner in command of Fort George in 1754, and in accordance with custom inventoried the contents of the fort and receipted for: "Within the battery, viz: twenty-four cannon and twenty-four carriages, chiefly broken; eight hundred and sixty-eight cannon shot.

"Within the fort walls, viz: twelve cannon and twelve carriages; . . . twenty-eight pistoles; seventeen small arms; . . . four cutlasses."

It was unfortunate that the fort was not in better condition, for the warlike aspect of the times called for action, while the currency of the colony had been greatly depreciated in value because of large issues of paper money. Five thousand pounds, later increased to ten thousand, were appropriated for repairs to Fort George. In 1755, the garrison at the fort was increased to fifty men, and a powder magazine was constructed in Newport. Again a petition to the King requested additional cannon.

The following year, five thousand pounds were appropriated for Fort George, and Captain Munford and Lieutenant Caleb Carr were given a garrison of twenty men with which to man the works. It was difficult for the colony to raise the money necessary to place the fort in a satisfactory condition, and it was doubly difficult to make the depreciated currency of the colony effect much in the way of repairs. Hence we find that the General Assembly "do vote and resolve, and it

is voted and resolved, that a public lottery be set up by this colony, for raising the sum of £10,000, to carry on the building of Fort George." This expedient for raising money was used in several of the colonies, and is still popular in some of the Latin countries. Ten thousand pounds were appropriated for the fort in 1758, and ten thousand additional were granted in 1759.

In 1761, William Read was appointed to the command of Fort George and, as was usual at each change in commanding officers, he made a full report of its condition and armament. His report shows that there were in the fort at this time, twenty-six mounted cannon in the battery and fourteen cannon intended for the colony sloop-of-war, besides a few old guns and a large amount of ammunition and small arms.

At the close of the last inter-colonial war, the colony settled down to await the greater struggle of the Revolution. The gathering of war clouds caused the colonists in 1773 to repair the platforms and to make carriages for the guns formerly mounted on the colony sloop-of-war. The closer approach of the break between England and her colonies showed the futility of attempting to hold the city of Newport against England, so, in December, 1774, all the cannon and ammunition, except three guns, were ordered removed from Fort George.

Colonel Nightengale successfully carried more than forty guns and a large quantity of powder and shot to a place of safety at Providence. When Captain Wallace, of the English frigate *Rose,* stationed at Newport, demanded an explanation of the removal of the guns and stores from the fort, Governor Wanton distinctly told him that it was done to prevent him from seizing them, and that they would be used against any enemy of the colony.

In June, 1775, the garrison at Fort George was discharged, the few remaining guns removed, and the fort abandoned. At Tower Hill a signal station was set up so that the approach of an enemy could be quickly signaled to the people. The entrance to the harbor at Providence was fortified between Field and Sasafras Points, and a battery of six 18-pounders was erected at Fox Point. This latter battery had a permanent garrison of seven men, with Esek Hopkins commanding.

In August, the British fleet threatened an attack upon Providence and the Americans manned all the redoubts and batteries in the vicinity in preparation for an engagement. The British, however, advanced only to Conanicut Point, and then withdrew. The Americans went on with their defensive preparations around Providence. In October, a floating battery was constructed, fire ships were built, and a boom and chain, so popular in coast defenses of the day, was stretched across

the channel. Batteries were erected at Pawtuxet and other places, and the troops on Conanicut and Block Islands were reinforced. In March, 1776, fortifications were built at Howland's and Bristol ferries, and in April, a battery was set up on Brenton's Point. Shortly afterwards, another battery was raised on Conanicut Island, and the ring around the harbor was drawn so closely that the British ships were unable to remain in port.

The British warship *Glasgow,* twenty-nine guns, put into Newport Harbor in April, and anchored near Goat Island; but such a heavy fire was brought to bear from Brenton's Point that the ship slipped its cable and put to sea. A few days later the *Scarborough* and the *Scymetar* were also badly damaged and driven from the harbor by fire from these batteries; and the harbor, for the first time in many months, was entirely free of enemy vessels.

Thirteen cannon were mounted in a new fort, built on the point at Newport; old Fort George was reconstructed; and another work was erected on Brenton's Point. In December, a British fleet of seven ships-of-the-line and four frigates, under Sir Peter Parker, joined a fleet of seventy transports carrying about six thousand men, and appeared off Newport. After several feints, the British troops were landed. They occupied Newport and took possession of Goat Island and Aquidneck Island, putting troops in the American works and building barracks on Brenton's Point.

For many months the British were undisturbed in their occupancy of Newport, but in the summer of 1778, Count d'Estaing, with twelve ships-of-the-line and four frigates, arrived off Newport and blockaded the British forces. In the succeeding days, the British vessels in the vicinity were destroyed, but in August, Lord Howe arrived with thirteen ships-of-the-line, seven frigates, and sixteen smaller vessels. D'Estaing put to sea to give battle, but a storm dispersed both fleets. D'Estaing, although he captured two British cruisers, was obliged to put in at Boston for repairs.

In the meantime, General Sullivan had occupied the forts on the northern part of Conanicut Island. Without the assistance of the French fleet, Sullivan began applying pressure upon the British, who, by the end of August, abandoned all their outworks except one. Sullivan was unable to proceed further. The fleet failed to return and the land forces became weakened by desertions, so Sullivan found it necessary to fall back upon the fortifications of the hills to the north. This he accomplished successfully after repulsing a severe attack by the British.

Learning of the approach of British reinforcements, Sullivan withdrew from Rhode Island, and the British remained in undisturbed possession of Newport until October, 1779, when they withdrew upon orders from their commander-in-chief.

In August, 1780, a French fleet under Admiral de Ternay, entered the harbor at Newport, and landed General Rochambeau and his army. Rochambeau built a line of earthworks north of Newport, completely cutting off all approach from other parts of the island. At Brenton's Point he threw up temporary works, and on all the islands of the harbor he placed guns. On the northern water-front of Newport, almost directly opposite the lighthouse end of Goat Island, he built a strong redoubt which received the name of Fort Greene. Fort George, since become Fort Wolcott, on Goat Island, was reoccupied.

The French occupation of Rhode Island was not disturbed by the British. In 1781, the troops were recalled from Newport to join General Washington and Admiral de Grasse in the campaign around Yorktown. With the departure of the French, the story of coast defense in colonial Rhode Island comes to an end, although the State legislature, unlike the legislative bodies of other states, felt the necessity of providing for its defenses until the Federal Government was in a position to undertake the provision of coast forts.

Fort Wolcott, on Goat Island, had been dismantled, but in 1784 some ordnance stores were provided. In 1785, the General Assembly appointed a committee "to draught a bill for manning of the fort on Goat Island, which is hereby named Fort Washington, and for putting the same in a situation sufficiently respectable to enforce the regulations of trade." A garrison of one gunner and four boatmen was retained in Fort Washington until 1791 or 1792, at which time the fort mounted three 24-pounders, five 18-pounders, and two 6-pounders. This tiny fort represented the coast defenses of Rhode Island when the government of the United States started its first project for the defense of its long shore line and its many fine harbors.

References

Arnold, Samuel G. HISTORY OF THE STATE OF RHODE ISLAND AND PROVIDENCE PLANTATIONS, VOLUME II. (New York, 1860.)

Avery, Elroy M. A HISTORY OF THE UNITED STATES AND ITS PEOPLE, VOLUME VI. (Cleveland, 1910.)

Bacon, Edgar M. NARRAGANSETT BAY. (New York, 1904.)

Bartlett, John R. HISTORY OF THE WANTON FAMILY OF NEWPORT, RHODE ISLAND. Published in *Rhode Island Historical Tracts No. 3.*

Bartlett, John R. RECORDS OF THE COLONY OF RHODE ISLAND AND PROVIDENCE PLANTATIONS IN NEW ENGLAND, VOLUMES III, IV, V, VI, and X. (Providence, 1858-65.)

Dix, John R. A HAND-BOOK OF NEWPORT AND RHODE ISLAND. (Newport, 1852.)

Foster, William E. STEPHEN HOPKINS, A RHODE ISLAND STATESMAN. Published in *Rhode Island Historical Tracts No. 19.*

Hammond, John M. QUAINT AND HISTORIC FORTS OF NORTH AMERICA. (Philadelphia, 1915.)

Newport Historical Magazine, The. Vol. I, No. 2. (Providence, 1835.)

Peterson, Edward. HISTORY OF RHODE ISLAND. (New York, 1853.)

Potter, Elisha R. THE EARLY HISTORY OF NARRAGANSETT. Published in *Collections of the Rhode Island Historical Society, Vol. III.*

Potter, Elisha R., and Rider, Sidney S. SOME ACCOUNT OF THE BILLS OF CREDIT OR PAPER MONEY OF RHODE ISLAND FROM THE FIRST ISSUE IN 1710 TO THE FINAL ISSUE, 1786. Published in *Rhode Island Historical Tracts, No. 8.*

Rhode Island. HISTORICAL TRACTS, NUMBERS 3, 8, and 19. (Providence, 1878-84.)

Rhode Island Historical Society. COLLECTIONS OF, VOLUME III. (Providence, 1835.)

MAXIM XVI

It is an approved maxim in war, never to do what the enemy wishes you to do, for this reason alone, that he desires it. A field of battle, therefore, which he has previously studied and reconnoitered, should be avoided, and double care should be taken where he has had time to fortify and entrench. One consequence deducible from this principle is, never to attack a position in front which you can gain by turning.—Napoleon's Maxims of War.

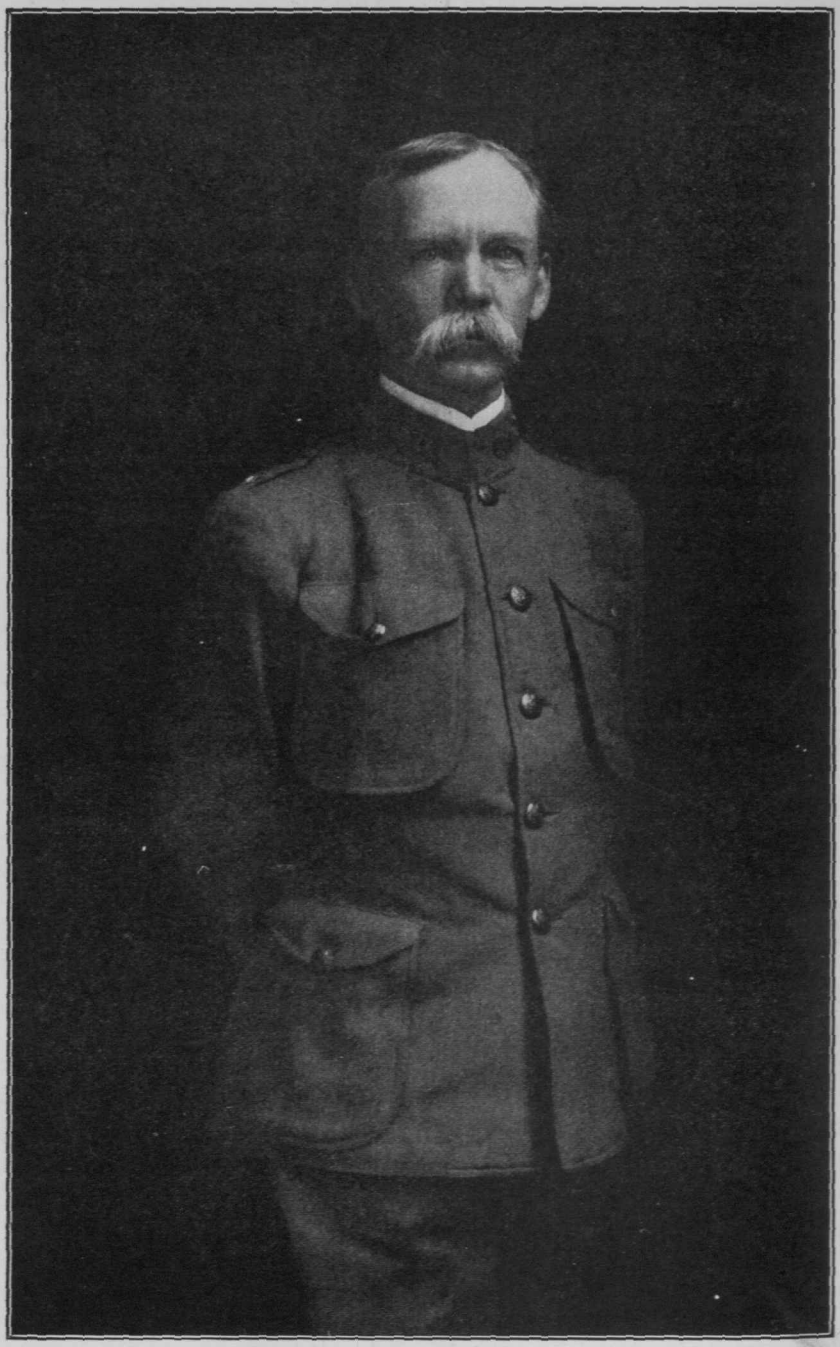

Colonel John A. Lundeen,

Commandant, Coast Artillery School, August 23, 1917—March 30, 1918

PROFESSIONAL NOTES

The 59th Coast Artillery (Tractor Drawn)

Coat of Arms for the 59th Artillery, C. A. C.:

Shield: Per fess *vair* and *argent*, in base a thistle proper.

Crest: On a wreath of the colors a demi-lion rampant *gules* armed and langued *azure* grasping in dexter claw a sword *or*.

Motto: Defendamus.

The 59th Artillery was organized January 1, 1918 in the Coast Defenses of Southern New York, four of the batteries and the Supply Company being formerly companies of the 13th New York National Guard. The first engagement was at St. Mihiel in Lorraine, and it also supported the 77th and 28th Divisions in the Meuse-Argonne, from positions near Ste. Menehould. The vair on the shield is from the arms of the Coast Defenses of Southern New York; the thistle is one of the emblems of Lorraine and is borne on the arms of Nancy, not far from St. Mihiel. The crest is taken from the arms of Ste. Menehould in red for artillery.

Private Frank G. Peterson

HEADQUARTERS FORT MONROE, VIRGINIA
Fort Monroe, Virginia

January 27, 1928.

SUBJECT: COMMENDATION.

To: Private FRANK G. PETERSON, Battery "A," 12th C. A., (thru C. O. 12th C. A.).

1. Official report has been made of the following incident. On January 17, 1928, Private William B. Silcox, Battery "A," 12th Coast Artillery, who cannot swim, fell overboard at the Pig Point Ordnance Depot and floated under the dock. He was apparently panic srticken and unable to help himself or make use of the aid extended by the Master of the tug "Reno" and other witnesses. When Private Silcox called for help, disregarding any danger to yourself and the possibility of striking the broken piling or other obstacles hidden under the surface of the water, you dived, brought Private Silcox to a place of safety and doubtless saved his life.

2. The courage you showed at this time and in disregard of your own personal safety reflects greatly to your credit, and it is with pleasure that official recognition is shown by your Commanding General.

R. E. CALLAN,
Brigadier-General, U. S. A.,
Commanding.

201—Peterson, Frank G. 1st Ind. GWC/amb

HQ 12TH CA FT MONROE VA, January 27, 1928—To: Private FRANK G. PETERSON, Battery "A," 12th C. A., (thru C. O. Battery "A," 12th C. A.).

It is very gratifying to the Regimental Commander to have a soldier of this command receive such well earned commendation.

G. W. COCHEU,
Lieut-Colonel, 12th C. A.,
Commanding.

Battery Officers Shoot Down Sleeve Target

The Second Section, Battery Officers' Class, Coast Artillery School, pursuing the course of instruction under the Department of Artillery in "Antiaircraft Materiel and Gunnery," on January 12, 1928, held the first antiaircraft target practice by student officers against a towed sleeve target. This practice, held at Crisp Park, Fort Monroe, Virginia, was preceded by a demonstration practice in which complete manning details were furnished by the 61st Coast Artillery (AA).

In the school practice the twenty-four student officers were assigned duties as battery commander, range officer, members of range section, gun commanders, and data setters at the guns. The twelfth shot of the last course brought down the sleeve target, much to the delight of the student officers and the battery personnel.

An interesting critique of this practice was held, during which student officers actively engaged in the discussion. The adjustment of fire was thoroughly analyzed and discussed. A flank observation post was used during this practice and the range sensings obtained from this station were compared with the results given by the height finder and horizontal base line plot of deviations. For safety reasons, the courses were too short to allow adjustment corrections to be applied during a course as a result of observations of bursts on that same course. It was clearly shown that adjustment of fire, especially based on observations from the flank observation post, materially increased the accuracy of the practice.

The Disarmament Question

From the Point of View of an Officer of the Swiss Military Establishment.

In the May, 1927, issue of the monthly *Journal Militair Suisse*, the editor, Colonel K. Von der Mühl, publishes an article in the nature of comments on and a summary review of items discussing essays that have appeared from time to time in recent numbers of his journal on the subject of the recent disarmament conference at Geneva. The logical reasoning of this writer is so forcible and convincing a presentation of the questions at issue that his writing is well worthy of the serious and thoughful attention of all readers. He says:

"The world—at least the world of parliaments and of the press—has been resonant with lamentations over the miscarriage of the disarmament conference at Geneva. The antagonisms of elements involving land forces, sea power, general defensive measures, professional armies, league of nations control, state sovereignty, so effectively and lucidly presented by Colonel Zublin of our military forces in his article published in the March number of this journal, could not be adjusted at the green tables and now there is a vigorous dispute over the question: whose fault was it? Each wanted only that the other should disarm; no one was willing to submit himself to any control because naturally he never intended, from the very first, to observe the restrictions that would be imposed upon him.

"We find only one point of view that failed to be given intelligent prominence and yet it was actually the only one that could have been really decisive: *the fact that the conditions of the international administration of law, order, and justice of the separate states does not permit individual states to dispense with military equipments.*

"It is sheer demagoguery and in its mildest forms utopian self-deception, to assert that a prohibition of military equipment can prevent war as long as this prohibition is not supported and enforced by an inner and superior neutral power. No one earnestly believes that respect for right and law can be maintained within the boundary of any separate state otherwise than by police authority. Each one of us would not hesitate to do, quite conscientiously, many things that are forbidden to him in the interests of the community except for the Damocles sword of police authority suspended over him, even though we set aside for the time being, purely ethical considerations; there will always be individuals unwilling to submit to restrictions; only superior power applied in the sense of law and justice can prevail in such cases. Nor is it otherwise in the international life of separate states. There is not in history a single instance where a really independent state has been successfully brought to observe a law that did not suit it except by force. Even the federal states in existence today (Switzerland, Germany, the American Union) have succeeded in attaining their present status only by force against disruptive antagonisms and since there have prevailed in them *superior federal forces* that forbade the component members from taking individual action, and they maintain this power in case of necessity and have thus prevented wars between the individual states. It is not the prevailing conviction of the immorality and repulsiveness of war as a means of adjustment of controversies among states that has 'abolished' war among these federated states, but the perception that a superior federal power furnishes a better means of settling disputes between them than individual self help. It is the same series of development that the single individual has experienced when he could see that the state offered him better protection of his rights and could protect him more efficiently as an individual than he could by his own power. Self-protection by force has become unnecessary and without purpose for the separate man and for the separate component state of a federation of states because such protection is assured only when the federal state has and is ready to use the power to enforce the rights of its individual citizens and of its individual members against disorderly elements from within and aggressions from without.

"The league of nations—from which very important states are yet absent—is an initiative toward this most desirable condition, but the end is still far away and ahead of us. We will not enter here into a discussion of the value of the league of nations and of its capacity for maintaining and developing itself but set forth only that its most convinced adherents can see in it only a beginning. It has not yet the power to pass judgment on the infringement of law and order by independent states without any participation on the part of the states affected or to prevent and punish such transgressions. It still accepts the untoward conception of '*the great powers*' the preponderance of those whose military means are the most powerful. Politics, that is the interests of power and not of pure justice, still guide its decisions. As long as that is the case no sovereign state can dispense with its warlike equipment any more than it can dispense with its police and fire protection forces.

"Not disarmament but only a new organization of international adjustment of law and order can make the beginning. It is only when a superior power in the association of the states takes over and establishes security of right and order that an individual state can dispense with self help and preparation for it. There may be differences of opinion in regard to the distance that we are still from such a condition; we believe that it is yet far, very, very, far away. No one can yet certainly point out the time when it may be attained.

"For this very reason descent has been made from the thought of complete disarmament to that of the reduction of armaments. We look upon that also as indeterminate. Reduced to its simplest form it may be formulated about as follows:

"States are succumbing under the burden of expenditures for military equipments that are growing from year to year by competition; it is therefore of common interest to reduce them. Assuming the relative size or power of the military equipment of certain states to be in the ratio of:

1000 : 500 : 100 : 50 : 10

and reducing them to the ratio of:

100 : 50 : 10 : 5 : 1

we have them still of the same *relative* strength as they were before the reduction. A state that has 100 divisions is twice as strong militarily as one that has only 50, and so on. The reduction has been made and still no one has suffered in *relative* strength. Is there any less liability for war between them than there was before the reduction?

"Simple as the arithmetical example of reduction may appear, its application is still most difficult. Even computation and estimate of the conditions of today is simply an impossibility because things of different kinds cannot be added, subtracted, multiplied, nor divided. In order to accomplish the work of proportionate reduction of armaments the elements composing them will first have to be assimilated and their relative values determinated in order that they may be equitably divided. This would in itself be a task whose accomplishment cannot be foreseen, and, assuming that it could be attained, one will be immediately confronted with the second and equally hopeless problem: establishing satisfactorily and to a certainty that the reductions arrived at are so exact and just that they will appear as a foundation for acceptance of a new order and can be converted from an existing proposition into an established permanent condition of right and justice. How will a solution of this problem be brought about without a peremptory authoritative decision? Would not each state in the meantime strive to prepare itself most completely for the time when this decision is to take effect, that is, make the greatest possible effort to enlarge its equipment before the decision is promulgated? It therefore appears to us that it would be theoretically and practically more expedient to skip altogether the reduction of armament issue and thus avoid the enormous task that will be required for its accomplishment and devote our efforts in the first place to creation of the foundation of a new world order that will make war unnecessary and impossible; then disarmament will come automatically as is the case today with the federated cantons of Switzerland which, although each of them still enjoys the traditional privilege of having and maintaining a regular armed force of 300 men, none of them has any such force because it would not know what to do with it.

"In our capacity of soldiers we have—without detriment to our outstanding participations as citizens—less occasion to concern ourselves with the ways in which the problems under discussion may be solved eventually, but we are decidedly opposed that sickly demagoguery shall make use of the agitation of a question today to undermine our means and measures of defense before even the most necessary preliminary foundations have been laid for a project that may require tens of years and even a century for its intelligent development. It is certainly too early to count on results now.

"Meanwhile the wise old Roman slogan '*si vis pacem para bellum*' still remains in force. Many generations will be born and wander to their graves before this key word of the experience of thousands of years ceases to lose its validity.

"This is not the first time we have taken occasion to make known our opinion and it will not be the last time. In face of the ever active propaganda of sincerely honest as well as of malicious elements for the reduction of military equipments it is necessary constantly to beat into their heads the incontrovertible truth that abolition of war is one of the most difficult problems that has ever confronted the human race, that its solution is probably in reality impossible and will demand, under most favorable conditions, strenuous and continuous exertions and that as far as concerns us there can be no question of neglecting or weakening our country's defensive measures until we have absolute assurance that they are no longer necessary."—G. R.

Conquering the World Before Thirty

One trouble with most young men is that they lack faith in themselves. Possibly the fault is with the schools and colleges. Youth is so often bewildered. Effort toward definite achievement is postponed too long. Few of us realize how much of the world's best work has been done by young men.

My friend, Clinton DeWitt, in preparing a paper for the club of which he is a member, gave this subject thorough study, and produced an amazing list, a copy of which I have before me.

Martin Luther at twenty-nine wrote the manfesto that led to the Reformation.

John Calvin was twenty-six when he wrote "The Institute of Theology."

Patrick Henry was twenty-seven when he made his speech against the Stamp Act.

Thomas Jefferson was thirty-three when he drafted the Declaration of Independence.

Alexander Hamilton was aid-de-camp of Washington at twenty, and at thirty-two—first Secretary of the Treasury.

Danton, probably the greatest figure in the French Revolution, was thirty when it began and thirty-five when he was beheaded.

Napoleon was twenty-seven when he was appointed to the command of the Army of Italy, and thirty-five when he crowned himself Emperor of the French.

Alexander had conquered the known world and was dead at thirty.

Charlemange was master of France and Germany at thirty.

James Fox was Lord of the Admirality and a thorn in the side of George III at twenty-one.

William Pitt became Chancellor of the Exchequer at twenty-three, and Prime Minister at twenty-four.

Charles Dickens was twenty-four when he began "Pickwick Papers" and twenty-five when he wrote "Oliver Twist."

Poe was doing some of his best work at twenty-five.

Balzac wrote seventy-nine novels between the ages of thirty and forty-three.

James Bryce had written "The Holy Roman Empire" at twenty-six.

Benjamin Franklin had written "Poor Richard's Almanac" at the same age.

Spinoza was a notable person at twenty-four, and was a great philosopher at thirty-three.

David Hume at twenty-six had shocked all Christendom with his highly heretical "Treatise on Human Nature."

Ruskin wrote "Modern Painters" at twenty-four.

Stevenson had completed "Treasure Island" at twenty-three.

William Lecky had completed the exhaustive "History of European Morals" at thirty-one.

Keats, Shelley, and Byron, as everyone knows, were dead at twenty-five, thirty, and thirty-six, respectively.

Sheridan wrote "The School for Scandal" at twenty-seven.

Shakespeare had completed ten of his greatest plays at thirty-two.

Newton formulated the law of gravitation at twenty-four.

McCormick and Westinghouse were twenty-three when they invented the reaper and airbrake.

Michelangelo did his statue of David at twenty-six.

The list could be made much longer. It is also interesting to know that an imposing list can be made of men who did not achieve distinction or find their proper work until they had passed forty.

Their is no deadline on achievement, but it pays to start young.—*The Imperial Type Metal Magazine.*

Brigadiers

On December 13 it was announced in the House of Commons that the rank of Brigadier would be substituted for that of Colonel-Commandant and Colonel of the Staff when the necessary statutory provisions had been made in the Army Act by means of next year's Army and Air Force (Annual) Act. There will be general approval of the change. After the war the number of general officers had increased so greatly that it was felt desirable that the temporary appointment of Brigadier-General should vanish and that some attempt should be made to give real standing to the rank of Colonel. Therefore officers commanding brigades were in future to be known as Colonels-Commandant and Brigadier-Generals, General Staff, by the old style of Colonels on the Staff. Both of the new styles were cumbrous, and few will regret their passing. Brigadier as a title has the advantage of freedom from confusion with other ranks. It has the disadvantage—a not very great disadvantage—of similarity with a non-commissioned rank in the French Army, a similarity which prevented its adoption in a past generation. No details were given in the House of Commons as to the rules governing the bestowal of the new rank, but it may be presumed that, as in the case of Brigadier-General and Colonel-Commandant, it will be granted for the term of an appointment, and that when the term is completed the officer holding the appointment will revert to his former substantive rank. There will, it may

be presumed, be no seniority for the rank of Brigadier other than that given by substantive rank already held.

In former years the style of Brigadier was used, not always officially, by officers commanding infantry and cavalry brigades, but in the 'eighties the title vanished. During the South African War officers commanding small detached forces were, if their substantive rank was below that of Major-General, given the temporary rank of Brigadier-General, and after the reforms consequent on the Esher Committee the style became general for many appointments and commands in the Service. The new style indicates the status of an appointment and cannot be confused with other ranks, however carelessly a written message or a spoken phrase may be constructed.—*The Army, Navy and Air Force Gazette.*

Face Powder and Gun Powder

Beauty costs the women of America an estimated $1,825,000,000 a year, that is their annual bill for the whole works—powder and creams, lip-sticks and perfumes, facial massages and those paradoxical permanent waves guaranteed for three months. It does not include clothing.

National defense costs the taxpayers of America, according to the budget, $680,537,642 a year. Of this sum $366,722,142 goes to the Army, and of this latter sum $281,616,286 is for purely military activities. The Navy's share of the total is $313,815,500.

National defense costs the nation 37.29 per cent of what it takes for the nation's womanhood to look its best.

What powder and paint are to woman, powder and projectiles are to the National Defense. The army ordnance department budget calls for $9,678,912, of which $4,499,528 is for munitions. The Navy ordnance department budget calls for $13,230,000. A total for both ordnance departments of $22,908,912, or one-eightieth of the annual beauty bill.

Face powder is an easy winner over gun powder in the American scheme of life. If looks could kill, we would be the best prepared nation on earth.—*Chicago Tribune.*

New Antiaircraft Gun

Official adoption of the 105-mm. antiaircraft gun, the longest snouted shooting iron of that size ever built in America, was announced today by the war department. The weapon will be the standard equipment for fixed antiaircraft defenses, supplementing the 75-mm. and 50 and 30 caliber machine gun batteries.

The 105-mm. which means a gun of approximately 4.1-inch bore, is a 60 caliber, or 60 times 4.1 inches in length, a little more than 20 feet. It fires a 33-pound projectile to a straight up altitude of more than 12,000 yards, almost eight miles and has a horizontal range of 20,000 yards. Shells leave the muzzle at a speed of 3000 feet per second, much faster than a military rifle bullet travels, and using fixed ammunition, that is prepared cartridges like rifle cartridge, and a compressed air rammer and semi-automatic breech block, the gun can be fired 15 times a minute.

A feature of this new gun, in common with other postwar light gun developments, is ability to replace worn out rifling in the field. It is of the loose liner type and a new liner can be put in by the gun's crew.

The nearest approach in caliber, which means length in relation to bore, to the new 105 in the navy post naval treaty 8-inch guns which are 55 caliber. Naval experts have indicated that increase range over the 55 caliber guns is to be expected, which may indicate an intention to go to a 60 caliber in future; but for the present the army 105 is in a class by itself in that regard for no other army or navy weapons except the 55 caliber navy eights exceeds 50 caliber.—*Daily Press* (Newport News).

40th Division Reunion

As a result of repeated suggestions from former members of the 40th Division, Major General Frederick S. Strong, war-time commander of the 40th, has called a reunion of all members of the famous division for Armistice Day of 1928 at Camp Kearny, San Diego, where the division was mobilized, trained, and demobilized after service in France.

General Strong has been receiving many requests from men of the 40th from all sections of the United States for a reunion of the forces which have not been called together since the war. In response to these requests he is issuing a reunion call, and it is meeting with an enthusiastic response. It is estimated that 5000 men from the Sunshine division will come to San Diego for the celebration November 10, 11, and 12.

Since Armistice Day falls on Sunday this year, Monday will be celebrated. The reunion will probably open Saturday with a Spanish fiesta in the evening. On Sunday there will be memorial exercises at the old camp site with sports in the afternoon, and on Monday morning there will be a general pow-wow with a parade by units in the afternoon, in conjunction with the Legion and the Naval units stationed at San Diego.

General Strong has established reunion headquarters at the San Diego Chamber of Commerce, which, with the American Legion, Disabled Veterans of the World War, Society of World War Officers, and the Reserve Officers Association of San Diego, are cooperating in planning the reunion.

The 40th Division, which received its name "Sunshine" because of the sunny southland where it was trained, was a National Guard division composed from the states of California, Arizona, Utah, New Mexico, and Colorado.

Officers on Detached Service

OFFICE CHIEF OF COAST ARTILLERY

Major General Andrew Hero, Jr.
Col. Charles E. Kilbourne (Executive)
Lt. Col. William S. Bowen (Organization & Training)
Major Henry T. Burgin (Personnel)
Major Joseph F. Cottrell (Plans, Finance & Materiel) (To be relieved 6-23-28)
Major Sanderford Jarman (Organization & Training)
Major Ellery W. Niles (Plans, Finance & Materiel)
Major Oliver L. Spiller (Plans, Finance & Materiel)
Major Clesen H. Tenney (Plans, Finance & Materiel) (To join after present course at C. & G. S. School)
Captain Hugh N. Herrick (Personnel)

COAST ARTILLERY BOARD

Colonel William E. Cole
Major Charles R. Finley
Major Edward W. Putney (To be relieved to sail to P. I. 3-7-28)
Major James C. Ruddell

GENERAL STAFF CORPS

Col. Arthur S. Conklin (Det. effective 6-30-28)
Col. Francis N. Cooke (To be relieved 5-9-28)
Col. Stanley D. Embick
Col. George H. McManus
Col. Samuel G. Shartle
Col. Marcellus G. Spinks
Col. Robert E. Wyllie (To be relieved 8-18-28)
Lt. Col. George W. Cocheu (Det. effective 6-30-28)
Lt. Col. Avery J. Cooper (Det. effective upon completion of present F. S. tour)
Lt. Col. John M. Dunn (To be relieved 5-5-28)
Lt. Col. Franc Lecocq (To be relieved 7-2-28)
Lt. Col. Francis H. Lincoln (To be relieved 7-2-28)
Lt. Col. Robert B. McBride (Det. effective 7-1-28)
Lt. Col. Henry C. Merriam (To be relieved 7-2-28)
Lt. Col. George T. Perkins
Lt. Col. Edward D. Powers (Det. effective 6-30-28)
Lt. Col. John P. Terrell
Lt. Col. George L. Wertenbaker (Det. effective 7-1-28)
Lt. Col. Richard H. Williams
Lt. Col. Walter K. Wilson
Major Harvey C. Allen (Det. effective 7-1-28)
Major Kenneth T. Blood (Det. effective 7-9-28)
Major Arthur G. Campbell (Det. effective 6-30-28)
Major Fulton Q. C. Gardner (Det. effective 6-30-28)
Major Joseph A. Green
Major George D. Holland (To be relieved 7-2-28)
Major Howard K. Loughry (Det. effective 8-18-28)
Major Homer R. Oldfield (Det. effective upon completion of present F. S. tour)
Major John T. H. O'Rear (Det. effective 7-1-28)
Major Reuben N. Perley
Major John S. Pratt
Major William E. Shedd, Jr. (Det. effective 7-1-28)
Major Jesse L. Sinclair
Major George A. Wildrick (Det. effective 7-31-28)
Major Phillip H. Worcester

FACULTY AND STAFF, ARMY WAR COLLEGE

Colonel Samuel C. Vestal
Major Paul D. Bunker (Hist. Sect.)
Captain Enrique M. Benitez (Hist. Sect.)

STUDENTS, ARMY WAR COLLEGE 1927-28

Col. Harry L. Steele
Lt. Col. Alfred A. Maybach
Lt. Col. William H. Wilson
Major Harvey C. Allen
Major Benjamin N. Booth
Major Arthur G. Campbell
Major John T. H. O'Rear
Major William E. Shedd, Jr.
Major Rodney H. Smith

FACULTY AND STAFF, C. & G. S. SCHOOL

Col. Russell P. Reeder
Lt. Col. Howard S. Miller
Major William T. Carpenter
Major Coleman W. Jenkins
Major John B. Maynard
Major John P. Smith
Major Benjamin H. L. Williams
Major Forrest E. Williford
1st Lt. Andrew P. Sullivan (Disc. Barracks)

STUDENTS, C. & G. S. SCHOOL 1927-28

Lt. Col. Hartman L. Butler
Major Franklin Babcock
Major Joseph D. Brown
Major Edgar B. Colladay
Major Roger B. Colton
Major Cyril A. W. Dawson
Major Edward B. Dennis
Major Herbert E. Ellis
Major Chauncey L. Fenton
Major Fulton Q. C. Gardner

Major James H. Johnson
Major Clifford R. Jones
Major Harold F. Loomis
Major Albert L. Loustalot
Major George F. Moore
Major Robert M. Perkins
Major Frank C. Scofield
Major Fred Seydel
Major Edward A. Stockton, Jr.
Major LaRhett L. Stuart
Major Clesen H. Tenney
Major Robert H. Van Volkenburgh
Major Eugene B. Walker
Major Robert R. Welshmer
Major Meade Wildrick
Major Charles K. Wing
Captain Delbert Ausmus
Captain Louis D. Farnsworth
Captain Willard W. Irvine

FACULTY AND STAFF, SPECIAL SERVICE SCHOOLS, COAST ARTILLERY SCHOOL, FT. MONROE, VA.

Col. Edward Kimmel
Major Robert Arthur (Edit. Journal)
Major Matthew A. Cross
Major Edward J. Cullen
Major Bird S. DuBois
Major Avery J. French
Major Fred M. Green
Major Felix E. Gross
Major Robert E. Guthrie
Major Francis P. Hardaway
Major Thomas H. Jones
Major George R. Meyer
Major Frederick A. Mountford
Major Randolph T. Pendleton
Major Daniel N. Swan, Jr.
Major Claude M. Thiele
Captain Charles H. Ainsworth
Captain Reamer W. Argo
Captain Herbert H. Blackwell
Captain Raymond B. Bottom
Captain Homer Case
Captain Benjamin F. Harmon
Captain Ira B. Hili
Captain Kenneth McCatty
Captain Samuel L. McCroskey
Captain William Sackville
Captain Gordon B. Welch
Captain George W. Whybark
Captain Arthur V. Winton
1st Lt. James L. Whelchel

STUDENTS, SPECIAL SERVICE SCHOOLS ADVANCED COURSE

Lt. Col. Frank Geere
Lt. Col. Clifford Jones
Major Clair W. Baird
Major William P. Cherrington
Major Henry W. T. Eglin
Major Frank E. Emery, Jr.
Major William C. Foote
Major Ellicott H. Freeland
Major Richmond T. Gibson
Major Frank L. Hoskins
Major George F. Humbert
Major William C. Koenig
Major Willard K. Richards
Major Wilmer T. Scott
Major Harold E. Small
Major John S. Smylie
Major Harry W. Stark
Major Samuel T. Stewart
Major Lawrence B. Weeks
Captain Aaron Bradshaw, Jr.
Captain Clarence E. Cotter
Captain Vernon W. Hall
Captain Francis A. Hause
Captain Henry B. Holmes, Jr.
Captain Reginald J. Imperatori
Captain LeRoy Lutes
Captain Wilmer S. Phillips
Captain Dorsey J. Rutherford
Captain Carl J. Smith
Captain Robert E. Turley, Jr.
Captain Shuey E. Wolfe

BATTERY OFFICERS COURSE

Captain Ben B. Blair
Captain James D. Brown
Captain Mario Cordero
Captain Frank H. Hastings
Captain Daniel W. Hickey, Jr.
Captain Harold S. Johnson
Captain William F. Lafrenz
Captain Abraham M. Lawrence
Captain Henry Linsert
Captain Oscar D. McNeely
Captain Stanley R. Mickelsen
Captain Don R. Norris

Captain Thomas R. Parker
Captain Henry H. Slicer
Captain Robert C. Snidow
Captain Arthur W. Waldron
Captain Webster H. Warren
1st Lt. William H. Burns
1st Lt. Robert T. Chaplin
1st Lt. Thomas G. Cranford, Jr.
1st Lt. John W. Dwyer
1st Lt. Wilbur R. Ellis
1st Lt. John H. Featherston
1st Lt. Lester DeL. Flory
1st Lt. Halstead C. Fowler
1st Lt. Paul Wm. George
1st Lt. Lee E. Gray
1st Lt. Claud T. Gunn
1st Lt. Clem O. Gunn
1st Lt. Linton Y. Hartman
1st Lt. Frederic L. Hayden
1st Lt. Paul B. Kelly
1st Lt. Raymond A. Knapp
1st Lt. William J. McCarthy
1st Lt. John D. Mitchell
1st Lt. Webster F. Putnam
1st Lt. Joseph S. Robinson
1st Lt. Joe F. Simmons
1st Lt. Horace Speed, Jr.
1st Lt. Edward L. Supple
1st Lt. Gervais W. Trichel
1st Lt. Carl B. Wahle
1st Lt. John A. Weeks
1st Lt. Albert J. Wick
1st Lt. Sherman E. Willard
1st Lt. Arthur E. Wilson
2nd Lt. Felix N. Parsons.

Massachusetts Institute of Technology

Captain Harold C. Mabbott
Captain Clyde L. Walker
1st Lt. George W. MacMillan

Signal Corps School

Captain Creighton Kerr

Air Corps Tactical School

Captain Thomas R. Phillips

United States Military Academy

Major Walter K. Dunn
Major Edward L. Kelly
Major Richard M. Levy
Major Horace F. Spurgin
Major Thomas A. Terry
Captain Clare H. Armstrong
Captain James L. Hayden
Captain Edward W. Timberlake
1st Lt. William I. Allen
1st Lt. Granger Anderson
1st Lt. Laurence W. Bartlett
1st Lt. Lathrop R. Bullene
1st Lt. Edward A. Dolph
1st Lt. R. A. Ericson
1st Lt. Bonner F. Fellers
1st Lt. Edwin B. Fitzpatrick
1st Lt. Francis B. Kane
1st Lt. Lyman L. Lemnitzer
1st Lt. Isaac H. Ritchie
1st Lt. Cortland Van R. Schuyler
1st Lt. Logan O. Shutt
1st Lt. Alba C. Spalding

Organized Reserves

1st Corps Area

Col. John C. Gilmore
Col. Frank E. Harris
Col. Harrison S. Kerrick
Major Francis J. Toohey
Major Edward W. Turner (To sail to P. I. 3-7-28)

2nd Corps Area

Col. Frank K. Fergusson
Lt. Col. Earl Biscoe (To sail to P. I. 5-16-28)
Major Edward L. Dyer
Major William S. Fulton
Major Kelley B. Lemmon
Major Cedric M. S. Skene
Major James F. Walker

3d Corps Area

Col. Louis R. Burgess
Col. John P. Hains
Col. Gordon G. Heiner
Col. James B. Mitchell
Col. Hugh K. Taylor
Lt. Col. Ralph M. Mitchell
Lt. Col. James B. Taylor
Major Eli E. Bennett
Major Stewart S. Giffin

4TH CORPS AREA

Lt. Col. George A. Wieczorek
Major Gilbert Marshall
Major Reuben N. Perley

5TH CORPS AREA

Lt. Col. Myron S. Crissy
Lt. Col. John R. Musgrave
Major Hollis LeR. Muller

6TH CORPS AREA

Major Arthur H. Doig
Captain Donald M. Cole
1st Lt. Volney Wortman

7TH CORPS AREA

Col. Allen D. Raymond
Major Harry L. King (To sail to P. I. 3-29-28)
Major Louis L. Pendleton
1st Lt. Leslie W. Jefferson

8TH CORPS AREA

Captain Eugene T. Conway
Captain Benjamin H. Lowry
Captain Caesar R. Roberts
1st Lt. John Healy, Jr.

9TH CORPS AREA

Col. Percy M. Kessler
Col. Frank S. Long
Col. Elijah B. Martindale, Jr.
Lt. Col. James L. Long
Major Charles M. Wood
Captain William G. Brey (To sail to P. I. 6-8-28)

NATIONAL GUARD

Col. John W. Gulick, Militia Bureau, D. C.
Lt. Col. Louis C. Brinton, Jr., D. C., N. G.
Lt. Col. Clarence G. Bunker, Calif. N. G. (Report after May 1928)
Lt. Col. Charles C. Burt, Mass. N. G.
Lt. Col. Robert W. Collins, O. C. of M. B., D. C. (Effective 3-7-28)
Lt. Col. Albert Gilmor, Mass. N. G.
Lt. Col. John C. Ohnstad, Ill. N. G.
Lt. Col. Charles O. Schudt, O. C. of M. B., D. C.
Major Carl S. Doney, Calif. N. G.
Major John F. Kahle, N. Y. N. G.
Major Manning M. Kimmel, Jr., Va. N. G.
Major Willis C. Knight, N. Y. N. G.
Major Delmer S. Lenzner, O. C. of M. B., D. C.
Major William R. McCleary, Mo. N. G.
Major Clarence T. Marsh, N. C. N. G.
Major Otto G. Pitz, Pa. N. G. (Effective upon completion of F. S. tour)
Major Frederick A. Price, N. Y. N. G.
Major George Ruhlen, Jr., Calif. N. G.
Major Carr W. Waller, Ore. N. G.
Major Oscar C. Warner, Me. N. G.
Major James DeB. Walbach, Va. N. G.
Captain Louis J. Bowler, Wash. N. G. (To sail to P. I. 3-29-28)
Captain Robert M. Carswell, Dela. N. G.
Captain Thomas L. Cleaver, N. Y. N. G.
Captain Christian G. Foltz, Pa. N. G.
Captain Valentine P. Foster, Mass. N. G.
Captain John H. Harrington, N. H. N. G.
Captain Byron T. Ipock, Pa. N. G. (To sail to P. I. 3-7-28)
Captain Rolla V. Ladd, Ark. N. G.
Captain John G. Murphy, R. I. N. G.
Captain George A. Patrick, S. C. N. G.
Captain Joseph C. Stephens, Mo. N. G.
Captain Louis H. Thompson, Ill. N. G.
1st Lt. Arnold D. Amoroso, R. I. N. G.
1st Lt. Abraham L. Bullard, Ark. N. G.
1st Lt. Robert E. DeMerritt, Me. N. G.
1st Lt. Joseph V. deP. Dillon, Conn. N. G.
1st Lt. William H. Papenfoth, N. H. N. G.

R. O. T. C.

MASSACHUSETTS INSTITUTE OF TECHNOLOGY

Col. Harold E. Cloke
Major Robert C. Eddy
Major Sidney S. Winslow
Captain Geoffrey M. O'Connell

N. H. COLL. OF A. & M. ARTS

Major Hugo E. Pitz
Captain Arthur Gilmore

FORDHAM UNIVERSITY
Lt. Col. Clarence B. Ross
Captain Napoleon Boudreau

UNIVERSITY OF DELAWARE
Major Robert P. Glassburn

UNIVERSITY OF PITTSBURGH
Major Lloyd P. Horsfall
Captain Maurice Morgan
1st Lt. Paul L. Harter
1st Lt. Archibald L. Parmelee

VA. POLY INSTITUTE
Major Willis M. Chapin
Major William R. Nichols
Captain Oliver B. Bucher
Captain John L. Scott

UNIVERSITY OF ALABAMA
Major Austin G. Frick
Captain Paul W. Rutledge

GEORGIA SCHOOL OF TECH.
Col. Earl D'A. Pearce
Major Theodore M. Chase
Major Barrington L. Flanigen

MISS. A. & M. COLLEGE
Major James S. Dusenbury
Captain Joseph H. Gilbreth
Captain William C. Kabrich

THE CITADEL
Major Jacob A. Mack
1st Lt. George J. Loupret

UNIVERSITY OF CINCINNATI
Col. John T. Geary
1st Lt. Willis L. Claxton
1st Lt. Ephraim P. Jolls
1st Lt. Leon A. White

MICHIGAN AGRI. COLLEGE
Major Charles Thomas-Stahle
Captain Philip W. Hardie
1st Lt. Kenyon P. Flagg

UNIVERSITY OF MICHIGAN
Major Reinold Melberg
1st Lt. John H. Madison

KANSAS STATE AGRI. COLLEGE
Major Christopher D. Peirce
Captain Riley E. McGarraugh
Captain Charles H. Stewart
Captain William W. Wertz

UNIVERSITY OF KANSAS
Major Joseph R. Cygon
1st Lt. Harry F. Meyers

UNIVERSITY OF MINNESOTA
Major Willis Shippam (Effective upon completion of Foreign Service tour)
Captain Nyle L. Adams
1st Lt. John F. Cassidy

WASHINGTON UNIVERSITY
Major Ralph W. Wilson
Captain Rodney C. Jones

UNIVERSITY OF CALIFORNIA
Major Robert D. Brown
Captain Lloyd W. Goeppert
Captain Edmund H. Stillman

UNIVERSITY OF WASHINGTON
Col. Harry T. Matthews
Major Royal K. Greene
Major Otto H. Schrader
1st Lt. Dean Luce

AGRICULTURE COLLEGE OF UTAH
Major Martin J. O'Brien
1st Lt. John L. Hanley

RECRUITING
Col. Charles H. Hilton
Lt. Col. Malcolm P. Andruss
Captain Joseph M. Cole
Captain Walter J. Gilbert
Captain Albert Mossman
1st Lt. Walter H. Carlisle
1st Lt. Martin C. Casey
1st Lt. James L. Hogan
1st Lt. Harry E. Magnuson
1st Lt. Otta Marshall
1st Lt. Charles E. Neagle
1st Lt. Thomas L. Waters

MILITARY ATTACHE'S
Col. Thomas F. Dwyer, Chile
Lt. Col. Richard I. McKenney, Poland
Lt. Col. Frederic H. Smith, Constantinople
Major William W. Hicks, Vienna
Major Frederick A. Holmer, Sweden

STUDENTS FOREIGN LANGUAGES

Captain Thomas J. Betts, Chinese Language

Captain Coleman F. Driver, Japanese Language

1st Lt. E. Carl Engelhart, Japanese Language

MISCELLANEOUS

Col. Thomas Q. Ashburn, Maj. Gen. Chairman, Advisory Board, I. W. C., D. C.

Lt. Col. Jay P. Hopkins (Asst. G-3, Hq. 6th Corps Area)

Lt. Col. Harry J. Watson, General Reserve Depot, Columbus, Ohio

Major Roy S. Atwood, C. M. T. C., Atlanta, Ga.

Major Karl F. Baldwin, Office Chief of Staff, G-2 (To be relieved 6-30-28)

Major Ralph E. Haines, With Gen. Staff, 8th C. A.

Major John L. Homer, Disc. Bks., Alcatraz, Calif.

Major Howard K. Loughry, Naval War College (Member G. S. effective 8-18-28)

Major Joseph J. Teter, Detailed in A. G. D.

Captain James G. Devine, Disc. Bks., Alcatraz, Calif.

Captain Edgar W. King, Disc. Bks., Governors Island, N. Y.

Captain Marvel H. Parsons, Off. Dir. Public Bldgs. & Public Parks, D. C.

1st Lt. George R. Burgess, C. M. T. C., Boston, Mass.

MAXIM XXXIX

In the campaign of 1645, Turenne was attacked with his army before Philipsburg by a very superior force. There was no bridge here over the Rhine, but he took advtange of the ground between the river and the place to establish his camp. This should serve as a lesson to engineer officers, not merely in the construction of fortresses, but tetes de pont. *A space should always be left between the fortress and the river, where an army may form and rally without being obliged to throw itself into the place, and thereby compromise its security. An army retiring upon Mayence before a pursuing enemy, is necessarily compromised; for this reason, because it requires more than a day to pass the bridge, and because the lines of Cassel are too confined to admit an army to remain there without being blocked up. Two hundred toises should have been left between that place and the Rhine. It is essential that all* tetes de pont, *before great rivers should be constructed upon this principle; otherwise they will prove a very inefficient assistance to protect the passage of a retreating army.* Tetes de pont, *as laid down in our schools, are of use only for small rivers, the passage of which is comparatively short.—Napoleon's* Maxims of War.

COAST ARTILLERY BOARD NOTES

Communications relating to the development or improvement in methods or materiel for the Coast Artillery will be welcome from any member of the Corps or of the Service at large. These communications, with models or drawings of devices proposed, may be sent direct to the Coast Artillery Board, Fort Monroe, Virginia, and will receive careful consideration. W. E. Cole, *Colonel, Coast Artillery Corps, President, Coast Artillery Board.*

New Projects

Project No. 596, Artillery Lantern, M-1 (Use of as Tail Light for Trailed Loads).—Four of these lanterns are to be furnished: two for test by the 61st Coast Artillery (AA) and two for test by the 51st Coast Artillery (HvTr), under the supervision of the Coast Artillery Board, to determine their suitability for use as tail lights for trailed loads.

Project No. 597, Annual Survey of Adopted Types of Equipment and Armament.—The Coast Artillery Board has submitted its views and recommendations covering Ordnance, Engineer, Signal, and Air Corps equipment, and miscellaneous equipment, including motor transportation, field desks, and kitchen equipment for railway artillery.

Project No. 598, Test of Balloon Filling Sets.—The Chief of Ordnance has issued instructions covering the shipment of two types of balloon filling sets to Fort Monroe. These sets are intended for issue to antiaircraft organizations to inflate 6-inch and 9-inch balloons used in training and target practice, in lieu of the more expensive apparatus issued by the Signal Corps for a similar purpose in connection with meteorological observations. The Coast Artillery Board has been directed to arrange for comparative tests of this apparatus by the 61st Coast Artillery, and to render a report covering the relative suitability of each type for the purpose intended.

Project No. 599, Test of D. C. Comparator, M-1—The D. C. Comparator, M-1, developed by the Board on Engineer Equipment, Corps of Engineers, for use with antiaircraft sound locators and searchlights, has been received at Fort Monroe and is under test by the 61st Coast Artillery.

Project No. 600, Resume' of Development of Standard Signal Equipment for 1st Sound Ranging Battery.—The Coast Artillery Board has prepared and submitted to the Chief of Coast Artillery a resumé of the various Coast Artillery Board projects covering standard signal equipment for sound ranging batteries. The Board adheres to the recommendations made in the individual projects.

Project No. 601, Test of Experimental Outpost Wire.—Twenty (20) miles of various types of experimental wire have been received at Fort Monroe for test under the supervision of the Board. This wire will be tested to determine suitability for handling by troops from the standpoint of weight per mile; suitability by reason of pliability, freedom from springiness, and ease of making splices; durability under stress of field conditions; electrical qualities; and general excellence as compared to other light types of field wire.

Project No. 602, Power Equipment for Railway Artillery.—The Coast Artillery Board has initiated a project having as its object the determination of the power needs of Coast Artillery railway units.

BOOK REVIEWS

Peace Or War. By Lt. Commander J. M. Kenworthy. Boni and Liveright. 1928. 5½"x 8". 338 pp. Ill. $2.50.

This is not a notable book. H. G. Wells says it is, but one may suspect that his real thrill comes from having the chance to write a preface in a book by an ex-member of "that profession of ruthless insensitive mediocrities, the military." How H. G. does love us!

Commander Kenworthy is now a Member of Parliament in the Labor Party. During the war he commanded a ship and was later a member of the Admiralty War Staff. His book, pointing out the dangers, horrors, and possible preventive agencies of future wars, is more striking because of its author than by reason of its substance.

Other men have made better studies than this of the critical areas of the world, from the peace-or-war standpoint. Here is an Englishman who misses the date of the Boer War by three years, and who makes such statements as these: "The Turks show the magnanimity of final victors in chivalrously tending the British graves on Gallipoli slopes," and, "Turkey made good her claim to the province of Mosul before the League of Nations." Can a man who makes such slips on foreign affairs and recent history be taken seriously when he attempts the difficult phophesy of the cause, location, and reaction of future wars?

What he says, in a rambling way, about the horrors of future war and the devastation it may cause, has also repeatedly been said, and by military men. Like many other Europeans, he envisages utterly ruthless warfare—aerial bombing and gassing of cities, submarine attacks on merchant and even neutral shipping, etc., etc. He makes a point that aerial bombing reprisals on cities is the only answer to similar attacks of the enemy. We cannot, he says, protect our own cities from the bombs and gas of enemy aircraft. The only thing we can do is to wipe out their cities in reprisal. Perhaps. But surely this answer would be as obvious to the enemy before he embarked on his ruthless warfare as it now is to Commander Kenworthy.

He has quite a bit to say about naval warfare, and takes a hearty fall out of the British Admiralty for their stand at the Geneva Conference last summer. He thinks they should have accepted our proposals as a "gift from heaven." But even his title to speak as an expert in naval matters becomes somewhat questionable when we read his remarks on Jutland. Surely an ex-member of the Admiralty Staff should know his Jutland. And yet this is what he says, speaking of the battle as a whole: "Only one battleship in the British line was hit by a heavy shell. . . . There was no opportunity for the attack to be pressed home on either side. . . . The tactics employed at the battle of Jutland by the British Commander-in-Chief were those that had become orthodox in the British Navy since the days of the sailing ships." Shades of Nelson!

On land warfare he follows the lead of the extreme British "mechanicalization" school. "The Western Powers . . . will be able to put airplanes into the air in their thousands; and infantry, as we know them, will be swept off the field.

. . . Similarly with tanks. . . . The future lies with the one-man tank, carrying a brace of machine guns mounted in parallel. . . . The cavalryman, as we know him, will disappear."

"The key to world peace," he says, "is friendship between Great Britain and the United States of America." Nevertheless he thinks an Anglo-American war a possibility. In such a war Canada might elect to remain neutral. He makes a point of her right to do so, but doubts if she will, for sentimental reasons. Unless Britain had a strong military ally, such as Japan, she could not, he thinks, save Canada if Canada were not neutral. But he contends that the loss of Canada would not be a vital blow to the British Empire. In fact he visualizes such a war as a hopeless proposition, neither side being able to strike a decisive blow. And "civilization, as we know it, would crash."

As a preventive agent of wars, he thinks little of the League of Nations. It "has lived in a state of suspended animation," and "has never yet succeeded in checking the designs of any one of the Great Powers."

But when he comes to his own plan for suppressing war, a vague outlawry of war by Great Britain, the United States, Holland, Switzerland, and perhaps other nations, there is, in the felicitous phrase of Mr. Wells, "a certain fading in the tones of our author's voice."—S. M.

All the World's Airships. C. G. Grey and Leonard Bridgman, eds. Sampson, Low, Marston & Company, Ltd., London. 1927. 8"x 13". 474 pp. Ill. 42*s*.

It is improbable that Mr. Jane, when he founded this aircraft annual, even dimly foresaw the size to which it would be forced to expand to keep abreast of the world's development in aerostation and aviation, particularly the latter. The airplane of today is the logical and direct outcome of the glider experiments of the nineteenth century. Like all adventures into an unknown field, progress was gradual, but with each new development it advanced at a continually increasing rate. Today, improvements are being made so rapidly that it is difficult to keep track of them. Increasing speed, increasing power, and increasing radius have made yesterday's plane obsolete and today's plane of questionable value.

Public interest has been proportional to the rate of progress. Whether the popular enthusiasm has stimulated airplane developments or the developments have aroused the enthusiasm is, according to the editors, a problem much akin to the old one concerning the precedence of the hen and the egg. Be that as it may, public interest demands some such a book as that compiled by Messrs. Grey and Bridgman.

This excellent volume is divided into four parts, lettered A, B, C, and D. Part A is historical in character, consisting principally of "notes on the year's work of each nation in military, naval, and civil aviation, together with the names and addresses, when obtainable, of the aeronautical officials, departments, associations, and publications of various nations." Many illustrations of groups of officers, airdromes, and the like appear in this section and add interest to the developments of the sixty nations (including British overseas possessions) reported here.

Part B, descriptive of "all the world's airplanes," is probably of the greatest general value. Here are illustrated and described all the current types of airplanes being produced in twenty-four countries. As might be expected, France, Germany, Great Britain, Italy, and the United States occupy the greater part of the section.

France receiving its proportional share despite its well-known reluctance to give out information. Twenty-six nations are listed as "not known to build aircraft." Two pages are devoted to the helicopters.

Part C allows sixty-three pages for the illustration and description of "aero-engines," and Part D finds eight pages sufficient to account for the airships of Great Britain, France, Italy, and the United States, the only nations actively engaged in the development of this branch of air service.

Among the many interesting illustrations one may, without exhausting the list, note particularly the Belgian Sabca 2 Four-seater Monoplane, the British Armstrong Whitworth "Argosy," Beardmore-Rohrbach "Inverness" Flying-boat, Hill "Pterdactyl" Tail-less Monoplane, and D. H. "Tiger Moth," the Finnish I. V. L. A-22 Two-seat Reconnaissance monoplane mounted on skis, the French Farman "Jabiru," the German Junkers, and the American Bonney "Gull." Every Coast Artillery officer should have access to this annual, and every antiaircraft organization should possess one.

Taschenbuch der Kriegsflotten, 1928. B. Weyer, ed. J. F. Lehmanns Verlag, Munich. 1928. 4½"x 6½". 443 pp. Ill. 15 marks.

Once again this excellent little naval handbook makes its appearance in competition with the corresponding annuals of France and England. Its size, its tabular arrangement, and its free use of bold-face type makes it very convenient for use by any one interested in the silhouettes and statistical details of vessels of war.

The first section is devoted to the warships of the various nations, which are arranged alphabetically, save for Germany. In this section, 168 pages of tabulated data of the navies of the world are followed by about the same number of pages of silhouettes, photographs, and deck plans of type vessels from all countries. A few pages of comparative statistics close the section.

The second section pertains to the German navy. The third section gives ballistic information concerning naval artillery. The fourth section is political in character, discussing the Washington treaty, the Geneva conference, and the situation and naval distribution of the principal nations. The fifth and sixth sections consist of tables of miscellaneous data. A 17-page index, set in three columns, brings the book to a close.

The Conquest of the Air. By C. L. M. Brown. Oxford University Press, New York. 1927. 4"x 6". 126 pp. Ill. $1.00.

The publishers, with the assistance of a large number of distinguished writers, have been bringing out a series of introductory volumes, which are given the ambitious title, "The World's Manuals." The groups of manuals are classified as History and Geography, Art, Religion and Philosophy, Language and Literature, The History of Science, and Social Science. This volume on the conquest of the air—numbered 29 in the series—appears in the group devoted to the history of science.

In this little book, the author has managed to cover the history of aerial development in a manner sufficiently comprehensive to satisfy the layman who desires only a general outline of the development of aerial navigation, and sufficiently interesting to hold the attention of the general reader, for whom it was written.

Man's first attempt to conquer the air is lost in the myths of dim antiquity, although Daedalus and Icarus are generally credited (in legend) with the first flight. Scientific study of the problems involved probably began with Leonardo da Vinci (1452-1519), who declared that flying was a mathematical and mechanical problem entirely within the field of human endeavor.

The author quickly covers the pioneers in the field of aeronautical endeavor and marks the start of real progress with Cayley (1774-1857). Da Vinci had pronounced the problem mechanical and mathematical, Wilkins declared flight to be possible, either with wings or with a "flying chariot," and Borelli found flight after the manner of birds impossible, bringing the problem down to the "flying chariot." Cayley, however, was the first to state clearly the problem to be solved: "to make a surface support a given weight by the application of power to the resistance of the air."

From this point the author traces the inevitability of the airplane, the high lights in development being, according to the author, Hensen, who indicated the lines on which an airplane might be built (1840); Stringfellow, who produced a successful power-driven model (1848); Lilienthal, the first scientific and persistent glider (1891), "second in importance only to the Wright brothers;" Chanute, another glider (1896), who connected Lilienthal and the Wrights; Langley, who reduced the air prolems to mathematical formulae and who narrowly missed success; and the Wright brothers, who developed the first machine to fly.

The lighter-than-air development is covered more briefly, for the initial problem was simpler of solution and the balloon has made less progress since its first invention. The names of Lana, Cavendish, Montgolfier, de Rozier, Giffard, Dumont, and Zeppelin are given due prominence.

After we have followed the author through this small volume, we are more than ever impressed with the wonderful progress that airplanes have made in recent years, and we agree with the author that "In an age of wonderful inventions and discoveries the conquest of the air was perhaps the most wonderful and inspiring of the material achievements of man."

The Outline of Man's Knowledge. By Clement Wood. Lewis Copeland Company, New York. 1927. 6¼"x 9¼". 654 pp. Ill. $5.00.

The author, whose versatility is indicated by a dozen or more books in the fields of science, history, biography, religion, fiction, and poetry, attempts the ambitious task of compressing human knowledge in less than seven hundred pages. His effort is laudable, but his success is by no means certain.

In the preface, which is called an introduction, we find the following: "The book holds the latest fruits of man's researches in every important expedition after truth; together with the relationships between these facts. . . . This book is not a fragmentary outline, but a complete systematization of all man's knowledge, with a logical framework in which every fact can be promptly placed, available for immediate use in a moment of need." "What saves time saves life; this book does that."

The author appears more in the light of an editor rather than an author. He makes no claim to originality of thought; he has merely selected what he considered the best in the several fields and has coordinated and compressed them to fit the purpose of his book. Criticism may therefore be properly directed only at the selection, classification, arrangement, and presentation of material.

In its major subdivisions, man's knowledge is grouped as history, science, literature, art, religion, and philosophy, with history and science making up half the book. The sequence is apparently a matter of convenience rather than one of chronology or of relative importance, and the separation is not complete, in that history enters into all the divisions and science into most of them. In general, the history is chronological and geographical; science, historical and descriptive; literature, bibliographical; art, historical; religion, historical and descriptive; and philosophy, historical and interpretive. Much attention is paid to modern schools of thought, and such subjects as the fourth dimension, non-Euclidean geometry, Einstein's theories, evolution, and psychoanalysis receive considerable space.

Passing from the particular to the general in science, the arrangement of subjects is: mathematics, chemistry, physics, and astronomy as the sciences dealing with all matter; and biology, psychology, and sociology as the organic sciences. Mathematics ends with geometry (including trigonometry); geography is not mentioned; and geology is included in astronomy. Anthropology proper is included—without being named—in biology, with ethnology included in sociology. Sociology includes archeology, demonology, economics, ethics, ethnology, history, jurisprudence, philology, politics, and technology. A more logical arrangement would pass from the general to the particular; mathematics (as the key to science), astronomy, geology, geography, physics, chemistry, biology, anthropology, and psychology, leading to philology as the starting point in the sociological group, which in turn lead to the philosophical groups—logic, ethics, æsthetics, politics, and metaphysics.

The statement that "The youngest and highest of the sciences . . . is sociology" implies that metaphysics is not a science. By considering logic as pertaining to psychology and by placing ethics, æsthetics, and politics within sociology, the statement may be held good, but metaphysics cannot be so readily pigeon-holed.

The keynote of the whole book is found about midway between its covers. "The average mental age," the author says, "of the people of this country, psychologists have established, is about that of a 12-year-old child." The book is written for the average American, who seldom seeks knowledge for the sake of knowledge, although he is probably doing more serious reading today than he has ever done in the past. Should he read this book he will find much of interest, although the author frequently rises above the level he set for himself, but the more widely read man will feel that matters of importance have been omitted, that trivialities have been included, and that the text is not proportioned to the relative importance of the subjects discussed.

In a work of this size, inaccuracies—slips of the pen—are to be expected. This is unfortunate, since the average man either will not recognize them or, recognizing them, will be inclined to distrust the general accuracy of the book. The following examples show what may be expected. "The speed of hydrogen molecules is about 60 miles a minute, or . . . about one-fourth the speed of the fastest airplane." "An eclipse of the sun is caused by the moon passing between the earth and the sun, so that the moon's shadow darkens the sun's face temporarily." "Middle C on the piano vibrates 261 times in a second; the second C above vibrates 522 times, or exactly twice as much."

Photography, Its Principles and Practice. By C. B. Neblette. D. Van Nostrand Company. 1927. 6"x 9". 655 pp. Ill. $6.00.

This volume comes as a timely contribution to the art of photography and allied processes and is a most complete encyclopedia for the use of students and research workers in the ever widening field of photography.

Before proceeding with the exposition of modern apparatus and processes the author wisely sees fit to develop the background of modern practice by describing the most notable discoveries of Wedgwood, Davy, Niepce, Daguerre, and other pioneers. Following the history of all the important discoveries, we are brought to the study of modern photography.

A chapter devoted to the camera and the dark-room describes the modern types of photographic equipment and the arrangements of dark-rooms including the proper means for the illumination of the latter.

A rather large section of the work is devoted to optics as applied to photography, and after taking up a study of the more common physical phenomena the author devotes a great deal of space to the question of image formation with the optical aberrations incident thereto and the means employed for the correction of each aberration. The profuse illustration of this portion of the text goes far towards making a highly understandable study of a rather complex problem. In a chapter devoted to the photographic objective we find a description with drawings of each of the optical systems from the earliest achromats to the present day highly corrected anastigmats.

After a treatment of the photographic emulsion wherein the behavior of the silver halides is taken up in quite some detail, we find a most interesting chapter on orthochromatics wherein the subject of color sensitivity and the photography of colored objects is dealt with at length. In this chapter we learn of the behavior of the photographic emulsion when exposed to the action of the different wave-lengths of which daylight is composed. The treatment of the emulsion with the various sensitizing dyes is discussed and the spectrographs for each color-sensitizing agent is reproduced. This portion of the book contains an exposition of some of the most important modern researches by the Eastman Kodak laboratories and is an invaluable guide to the choice of the proper sensitizing substance for special color work. The theory of light filters and a guide to their use is contained in this portion of the work.

In the chapter devoted to the latent photographic image the leading chemical and physical theories are considered at some length and the evidence in support of each theory is submitted. After a discussion of sensitometry and the exposure of the sensitized material there follows a study of the theory of devleopment. The remainder of the work is purely technical in character and needs no comment. After a study of the action of the various organic developing agents there follows a treatment of the technique of development, fixing, washing, intensification and reduction, and the various printing processes. The work closes with a most interesting chapter on natural color photography.

Professor Neblette has compiled this work as the result of many years of personal experience in this field and after a study of an enormous mass of material from other sources and has contributed a manual that will be of inestimable value to the student of this most useful art.—A. M. J.

The Silent Force. By T. Morris Longstreth. The Century Co., 1927. 6¾"x 8¾". 383 pp. Ill. $4.00.

Mr. Longstreth has been too modest in the wording of his sub-title. *The Silent Force* does not consist of "scenes," although interesting anecdotes and dramatic moments are present on almost every page; it is a comprehensive and detailed history of the Mounted Police of Canada from its organization in 1873 to the present time, and is written in a vivid narrative style that holds the attention of the reader from the first page to the last sentence.

Mr. Longstreth has gone to original sources for his material; he has had access to the daily records and other official documents belonging to the Force; he has made use of the few available books previously written about the Mounted Police, whose authors in almost every instance were members of the Force; and much that is unusual and valuable in the book he has had at first-hand from the men of the "Mounties" themselves. Mr. Longstreth has spent many months with the men of the Force, living with them in isolated posts from Newfoundland to Vancouver Island, from the United States border to the Arctic Ocean; sharing their dangers and their hardships, understanding their spirit and their courage. Knowing in this way his subject and his men, Mr. Longstreth has written an authentic work, probably the only one of its kind in existence.

"The Force that was never to be coddled" was organized to "inexpensively preserve" that disputed region, the Canadian Northwest, for the flag of England. In 1874 this band of raw recruits made "The Great March" from Fargo, North Dakota, where the railroad ended, to the Canadian Rockies, "nineteen hundred miles of unprecedented, ceaseless, and often desperate endeavor." But the very daring of this expedition, the initial move of the Mounted Police, won the respect of the outlaw whites, the renegrade breeds, and the Indians, and formed the corner stone on which the reputation of the Mounted Police was built. Then followed more than a decade of holding hostile Indians at bay; of bringing law and civilization to the prairies, the mountains and the Arctic tundras; always without political support, without necessary financial backing, without proper equipment. The troopers were not given beds nor blankets for many years, but slept in barracks on two boards, supported on trestles and covered with buffalo hide. It was during this period—from the organization of the Force to the opening of the Canadian Pacific Railroad—that the morale and the sense of fraternity of this small unit of hand-picked men were forged so strong that "deeds from which tradition grows were precipitated like rain." This was "The Iron Age of the Force, for the day had not come when man could be saved by mail from labor or learning; and the efficacy of reliance upon one's own efforts was paramount."

Then came the age of settlement—the stirring eighties and nineties—when thousands of amateur homesteaders were invading the Northwest, and the foremost duty of the Force was to see that these newcomers were protected against red men or white; to give advice as to fire-guards and winter supplies; to find lost stock; to aid in sickness; to help in any emergency that might arise. It was a "magnificent conception," this system of patrols in gold-and-scarlet "riding to and fro across the land, stopping wherever smoke rose from the loneliness of some cabin to the scarcely greater loneliness of sky," . . . and the conception was no less magnificently carried out. . . . The Force become known wherever English was read."

The great test of the Force came in 1896, when "a hurricane of humanity

broke on Skagway, Alaska, and breached civilization there by its impact. Thirty thousand crazy men, hearing that the earth had thrown great vaults of solid gold open to the public, . . . disembarked that winter on that avarice stricken beach. . . . The stampeders, leaving chaos behind, fled, pushed, tugged, blasphemed and tottered over the Summit (Chilkoot Pass) into . . . peace, order, safety . . . for under the Union Jack stood two or three men in scarlet tunics to mark where license ended and where law began." The chapters on the Arctic patrols are filled with the most remarkable accounts of bravery and steadfastness against overwhelming odds. After the Yukon gold excitement had subsided and conditions about Dawson had become stabilized, the Force explored the Canadian Arctic; built trails and forts on the Peel river, the MacKenzie river, the Peace river, and in the country about the Hudson and Baffin Bays; and so to the most northerly post of all, Herschel Island in the Arctic Ocean, which completed the conquest of the Arctic and secured the wealth of whale oil, furs, and gold for England. The stories of Staff-Sergeant Joy of the Baffin Bay patrol; of Inspector Constantine of the Yukon; of Corporal Fitzgerald of the Arctic coast and of other heroes of the White Frontier Patrols are amazing recitals of heroism and loyalty.

In 1904 the Force was recognized by England to the extent of being "knighted by a wave of the royal wand" and became The Royal Northwest Mounted Police and the pay of a trooper was raised from fifty cents to seventy-five cents a day! For a time provincial autonomy threatened the existence of the Royal Mounted—each province considered having provincial and municipal police of its own—but the Force weathered the storm and entered on a new era. Versatility today marks the Force as much as it did in the pioneer days, and the constable is now called upon to act as the enforcing agent for federal statutes throughout Canada; to see that law and order are kept over vast areas of the Northwest Territories, the Yukon, and the National Parks; and to assist other departments of the government in countless ways—for instance, to suppress counterfeiting and narcotics, to help collect the income-tax, to do guard duty at the naval dock yards. But the days of frontier adventure are not over. "Last year a hundred thousand miles of patrolling was done in the Yukon and two hundred thousand miles in one other district alone, out of Regina; looking after Indians occupied the Force in every Province, necessitating a thousand-mile patrol in the God's Lake country; and all the varieties of ruffian and buccaneer encountered in the eighties were coped with by the border detachments."

The character of the Force is splendidly summed up in the last chapter of Mr. Longstreths able history. "The Force is greater than its men, greater than the sum of all its parts, because it is that sum plus the spirit of those who have gone before. It is an historical and living tradition into which bright deeds or gray are being daily woven, but which is preponderantly a tissue of the corps in its entirety. In their shirt sleeves the men share the foibles of the average. In uniform the Force is as invincible as blood and flesh can be. Its men are those you might meet anywhere; but the Force is something you have always dreamed of meeting and never can. It is an idealization which its members, in the supreme moments of crisis, have lived up to at the expense of prudence, money, and their lives. . . . By an adherence to this idealization, by a cohesion about this central principle for which the name stands, the Force has withstood outer dangers and inner decay, has survived political stupidity, and political chicanery, and popular blindness. It has remained unhurt even by its fame."—E. L. B.

The Thunderer. By E. Barrington. Dodd, Mead & Co., New York, 1927. 5½"x 7½". 333 pp. Ill. $2.50.

This is an excellent study, by a capable analyst, of the psychological effect of a great passion on Napoleon. That it was written by a woman makes it even more worth while. Perhaps only a woman could have done it. Only a woman honest enough to face facts without mawkish sentimentality could have done it well.

That the brilliant Italian campaigns of 1796-97 coincided with the height of Napoleon's passion for his bride, Josephine, is of course no new discovery. What is new, at least to this reviewer, are the psychological deductions (or suppositions, if you will) drawn very persuasively by the author of this book from the known courses of Napoleon's work and his love during that period. The white heat of his passion so tempered his intellect, the author thinks, as to enable him to reach in his first campaigns the maximum power of his great genius. And as that passion cooled, under Josephine's shallow frivolity and indifference, his ambition received still another spur—the spur of necessity, the urgent need to fill the gap she had made in his ardent nature. From his Egyptian campaign on, this was, the author thinks, Napoleon's great motivation. Rarely has E. Barrington a good word to say for Josephine, and yet she brings out this thesis admirably: that without Josephine, Napoleon would perhaps never have been.

With this psychological change in Napoleon, with his forced absorption in overpowering ambition, came of necessity a certain atrophy of feeling, a callousness of heart which made him the more effective as a conqueror, but far less admirable as a man.

Running through E. Barrington's analysis is a thread of mysticism, the old superstition that Napoleon's famous "star," his destiny or luck, as you choose to call it, was in reality Josephine's. "Our Lady of Victories," his soldiers called her. In later days they recalled that his great triumphs had begun immediately after he married her, and had ceased after the divorce. Naturally in a romantic version of the story the author makes much of this. In her epilogue she points out that while Napoleon's blood has disappeared, Josephine still has royal descendants in Europe.

"The Thunderer" etches in sharp lines the extraordinary characters of Napoleon's court, and the still more amazing members of his family. There is an especially vivid picture of that eminently efficient and common-sense woman, his mother, surrounded by her turbulent brood which stood the world on its head but failed to ruffle her.

Perhaps a certain poetic license is to be expected in a book written in the form of a popular romance. But why accentuate sexual license? That Napoleon was sexually amoral is of course well known. But the number and even the names of his mistresses are also fairly well known. Frédéric Masson describes thirteen of them in considerable detail, and then brings them into proper perspective by rating Napoleon's general attitude towards them on a level with his interest in the midnight supper habitually set out in a corner of his study. He was much too absorbed in his work to ask for food, but it was there if he wanted it. Such being the case, one would suppose that his known infidelities would have been quite sufficient for E. Barrington's purpose without leaving the impression, as this book does, that his liaisons were legion and that he was the greatest roué, as well as the greatest soldier, of the ages.—S. M.

THE COAST ARTILLERY JOURNAL

Published as the Journal U. S. Artillery from 1892 to 1922

MAJOR ROBERT ARTHUR, C. A. C. . . . . *Editor and Manager*
FIRST LIEUT. JAMES L. WHELCHEL, C. A. C. . . . . *Assistant Editor*

Volume 68 APRIL, 1928 Number 4

CONTENTS

CS-2 . . . . . *Frontispiece*

THE MILITARY POLICY OF THE CRITICAL PERIOD 281
By EDGAR B. WESLEY

MUCH ABOUT LITTLE . . . . . *By* LIEUT. P. SCHWARTZ 291

THE KNOX GUNNERY TROPHY 299

THE BATTLE OF CHANCELLORSVILLE 307
By MAJORS ELLIS, BROWN, JOHNSON, AND DAWSON

DANGER ZONES—ITALY 327

OUR COASTWISE SHIPPING . . . . . *By* MAJOR G. F. HUMBERT 334

EDITORIAL 343

PROFESSIONAL NOTES 347
Coat of Arms of the Harbor Defenses of Eastern New York—Classification of Officers of the C. A. C.—German Long-Range Heavy Artillery in the World War—New Army Antiaircraft Gun—Aircraft in Submarines—Combat Order for Harbor Defenses—The Influence of Mechanization of Armies on the Duration of Wars—United States Sea Power—R. O. T. C. Camps—Vanishing American Soldiery—A New Safety Fuel—The Field Artillery Role in Mechanization—Wider Highways—Federal Services Finance Corporation.

COAST ARTILLERY BOARD NOTES 357

BBOOK REVIEWS 371
Reminiscences of Adventure and Service—The Army and Sea Power—A Subaltern on the Somme—Principles of Radio Communication—Marching Men: The Story of War—Texas and Southwestern Lore.

Authors alone are responsible for statements in contributed articles

Published monthly under the supervision of the Commandant, Coast Artillery School, by direction of the Chief of Coast Artillery, for the information of the Coast Artillery personnel of the Regular Army, National Guard, and Organized Reserves.

Terms: United States, $3.00 a year; single copies, 50 cents. Canada, $3.25 a year; single copies, 55 cents. Foreign, $3.50 a year; single copies, 60 cents.

Entered as second class matter at the Post Office at Fortress Monroe, Va. Acceptance for mailing at special rate of postage provided for in Section 1103, Act of October 3, 1917, authorized May 8, 1920.

Copyright, 1927, by the COAST ARTILLERY JOURNAL.

Address: The COAST ARTILLERY JOURNAL, Fort Monroe, Va.

Printed by HOUSTON PRINTING AND PUBLISHING HOUSE, *Hampton, Va.*

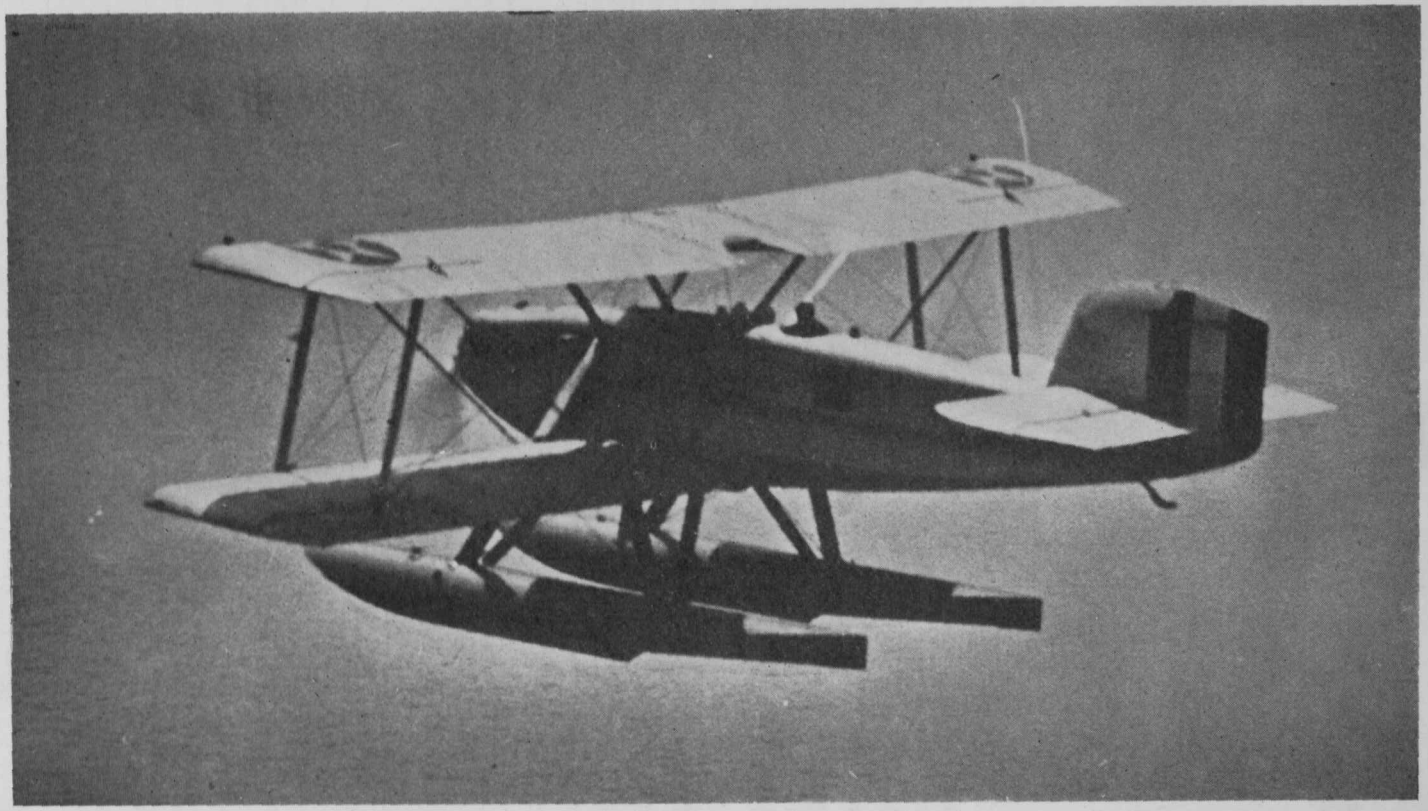

Curtis Seaplane, Model 2: Length overall, 40 feet 3 inches; Wing span overall, 56 feet 6 inches; Weight loaded, 8670 pounds; Wright T-3, 600 horsepower engine; Maximum speed 102 miles per hour; Ceiling, 7200 feet.