COAST ARTILLERY JOURNAL

JANUARY-FEBRUARY, 1936

Automotive Transportation

for the

MILITARY SERVICE

By

CAPTAIN JOHN T. DECAMP, C.A.C.

and

1ST LIEUT. LEW M. MORTON, C.A.C.

Instructors in Motor Transportation
Coast Artillery School

Here is a concise, technical discussion made available to the service at a time when such a book is in considerable demand. This one volume covers all necessary information concerning the design, operation and maintenance of automotive transportation issued to the military service. The text has been *reviewed* and *approved* by Professor Erwin H. Hamilton, B.S., M.E., of New York University, acknowledged authority on automotive engineering.

Here are the Titles of 31 Fact-Filled Chapters:

Outline of Automotive Vehicle Construction.
Explosive Cycles and Firing Orders.
Cylinders, Pistons and Piston Rings.
Connecting Rods, Crankshafts and Fly-Wheels.
Valves and Valve Operating Mechanisms.
Valve Timing.
Crankcase Lubrication.
Engine Cooling Systems.
Fuel and Fuel-Feed Systems.
Elements of Carburetion.
Carburetors.
Elementary Electricity and Magnetism.
Storage Batteries.
Battery Ignition Systems.
Starting Motors, Generators, and Lighting Systems.
Theory of Internal Combustion Engines.
Engine Test and Performance.
Diesel Engines.
Clutches and Transmissions.
Universal Joints, Drive Shafts, and Differentials.
Rear Axles, Frames, Springs, and Shock Absorbers.
Brakes.
Front Axles and Steering.
Tires, Rims and Wheels.
Engine Overhaul.
Automotive Vehicle Troubles.
Painting.
Convoys.
Organization and Supply.
Methods of Inspection.
Automotive Maintenance.

Prices are retail, postpaid. On any order for 10 or more copies a discount of 10% is allowed F.O.B. Washington.

PRICE

Durable Paper Binding, $2.50
Leatherette Binding . . 3.00

This book is not a revision of "Military Motor Transportation." It is a new book compiled from authoritative sources.

THE COAST ARTILLERY JOURNAL

1115 17th Street, N.W. WASHINGTON, D. C.

THIS IS NOT A PAID ADVERTISEMENT

THE COAST ARTILLERY JOURNAL

Member Affiliated Military Magazines

Published as the Journal of the U. S. Artillery from 1892 to 1922

LIEUT. COL. E. E. BENNETT. C.A.C., *Editor*

VOLUME LXXIX | JANUARY-FEBRUARY, 1936 | NUMBER I

Publication Date: February 1, 1936

Contents

Frontispiece 2

The First Army Maneuver 3
By Major William Hones.

Organization of Guns in Antiaircraft Regiment 10
By Major Willard Irvine.

The Fist in the Dyke 13
By Major John R. Mendenhall.

Are Your Harbor Defense Coordinates Up To Date? 21
By. Lt. Col. H. H. Acheson and Major D. W. Hickey, Jr.

An Old Method in a New Guise 24
By Lieutenant Bohdan Mankowski.

Conversion Tables 27
By Lieutenant H. W. Conklin.

Spy and Counter-Spy — Part I 28
By Thomas M. Johnson.

Practical Training for Reserve Units 33
By Colonel R. H. Williams.

Emergency Methods of Fire Control 37
By Captain James T. Campbell.

Joint Maneuvers 41
By Lt. Col. C. B. Meyers.

Leavenworth or Bust 45
By Colonel Rowan P. Lemly.

Target Practice Under Gas 47
By Major L. D. Farnsworth.

Antiaircraft Intelligence Service 49
By Capt. R. W. Berry and Lt. J. A. Sawyer.

New Type Testing for Gunners' Examinations 53
By Lieutenant Peter E. Donnelly.

Battery "B" 64th C.A. Wins Knox Trophy 54

Knox Medal Award 55

Truckin' to Town 56
By Cuthbert.

Coast Artillery Activities 58
Panama Canal Department News Letter—Doings at Fort Hancock—Fort Monroe News Letter—Corregidor News Letter—Harbor Defenses of Pensacola.

News and Comment 65
Order of the Illustrious—Let's Make it Unanimous—A Friend of National Defense—Results of Election—Death, Then What?—General Morehead, If You Please—Reserve Officers' Association Sponsors National Defense Week—War Records of First Corps of Cadets—Fifth Division History.

Coast Artillery Board Notes 70

The Foreign Military Press 73
Reviewed by Lt. Col. Alexander L. P. Johnson.

Coast Artillery Orders 77

Book Reviews 78

THE COAST ARTILLERY JOURNAL IS NOT RESPONSIBLE FOR OPINIONS EXPRESSED IN PUBLISHED CONTRIBUTIONS

THE COAST ARTILLERY JOURNAL pays for original articles upon publication.

Published bi-monthly under the supervision of the United States Coast Artillery Association for the information of the Coast Artillery personnel of the Regular Army, National Guard and Organized Reserve.

Publication Offices, 1406 East Franklin Street, Richmond, Virginia; Editorial Offices, 1115 17th Street, N.W., Washington, D. C.

Terms: $4.00 per year. (Coast Artillery Association members, $3.00 per year.) Single copies, 75 cents.

Entered as second class matter at Richmond, Virginia, under the Act of March 3, 1879, for mailing at special rate of postage provided for in Section 412, Act of October 3, 1917.

Copyright, 1936, by the United States Coast Artillery Association.

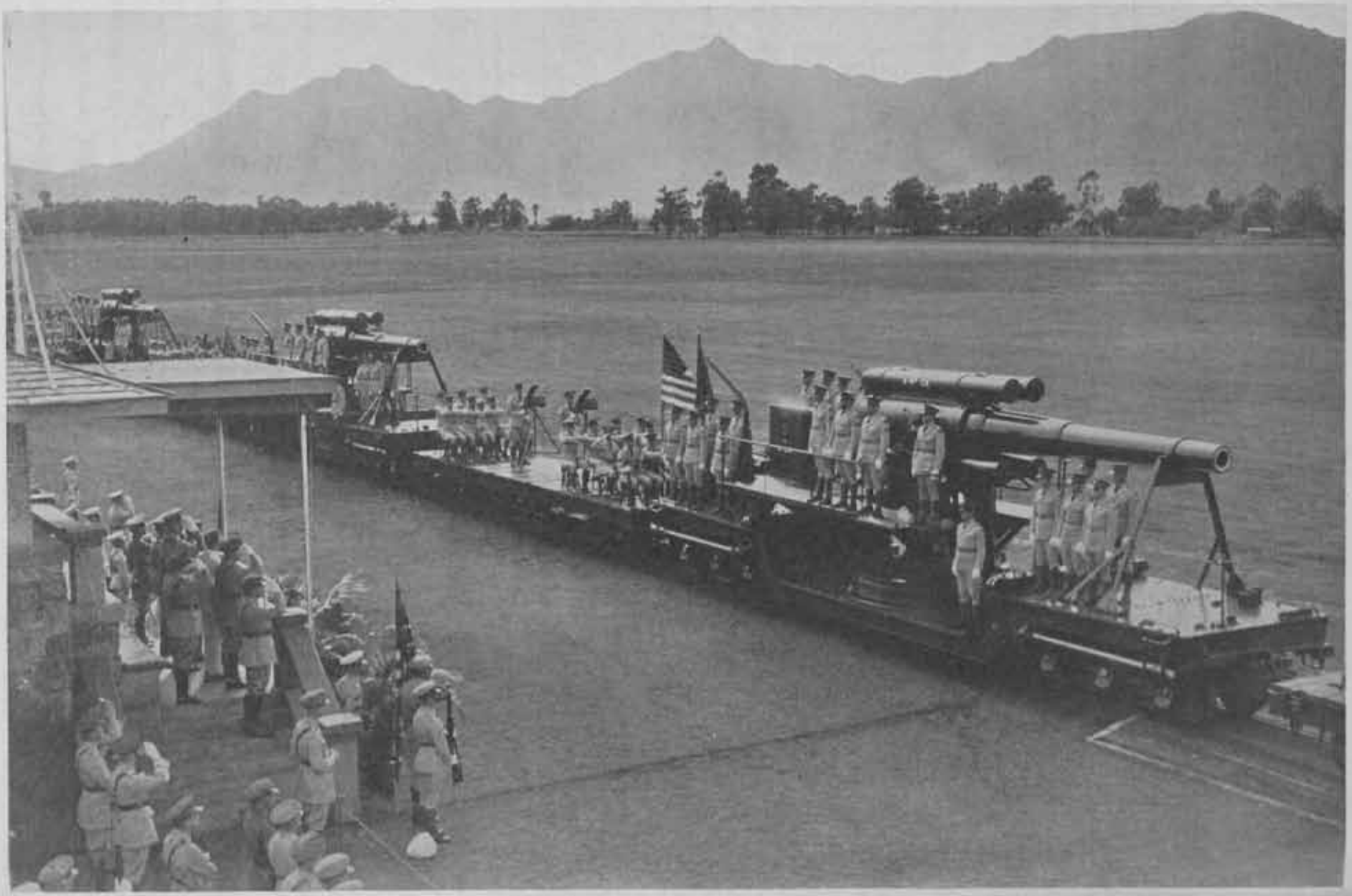

First Battalion, 41st Coast Artillery, manning eight-inch railway rifles, passes in review before the Secretary of War at Schofield Barracks.

"Follow me." Red Infantry taking Hill 300.

The First Army Maneuver

By Major William Hones
Infantry

(Photos by Signal Corps)

"SO," said the Kaiser to his War Minister, "we shall have a two-corps maneuver at Doberitz the day after tomorrow." And thus was the maneuver initiated.

To the reader of our daily papers it probably appears that some similar remark from our Secretary of War would result in a good fat maneuver a few days later. Actually the distance that lies between this impression and the truth can only be measured in astronomical units. In planning a maneuver in America we encounter many an obstacle that was simply non-existent in Imperial Germany. Money must be obtained from Congress, land must be secured over which to maneuver, and arrangements must be made whereby the National Guard may participate at the time of year convenient to them.

The initial directive for the First Army maneuver was received by Major General Dennis E. Nolan, the First Army commander, in April, 1934. A skeletonized staff immediately dug in and began the preliminary battle which involves the preparation of estimates, the selection of a maneuver area, and the construction, so to speak, of the maneuver foundation.

General Nolan's directive called for location of division camps on lines about six to ten miles apart in order that the round trip from camp to battle position would be only a short day's march. This was based on the following factors:

(1) Troops called from civilian life for fifteen days of field training are not initially inured to the hardships of campaigning under simulated war conditions.

(2) Divisions, in most cases assembling as units for the first time since the World War, would be given basic training rather than advanced training requiring night operations and long marches. The problems would avoid physical tests.

(3) Ordinarily, the subordinate units of National Guard divisions conduct their annual period of field training in rotation. For this reason it was planned to utilize but five days of the training period for problems under army control. During the remainder of the period units would be trained under divisional control. The base camp arrangement would facilitate training in each case.

The fears of the umpires that a general mêlée would ensue when South Boston crashed into Jersey City never materialized.

(4) Peace-time maneuvers conducted on privately-owned property in the populated portions of this country must always be more or less restricted in order to minimize damage claims.

Some of the National Guard units did not favor a large-scale maneuver, fearing a repetition of the big pre-war variety where their willing but unhardened men were hiked to death, and where no one in the smaller units had any idea of what was going on. Such soirées for the small units fail to produce anything helpful; actually a deep disgust is created and this is detrimental to recruiting. On the other hand, this year's maneuver, based on General Nolan's carefully considered directive, has resulted not only in valuable instruction to the small units and their leaders but in an enthusiastic clamor for "bigger and better" maneuvers.

The purpose of the exercises as announced in Training Memoranda, First Army, was:

"(1) To test the ability of active units of the First Army to concentrate simultaneously, at existing strength, prepared for field service.

"(2) To train all echelons in the logistics of a concentration.

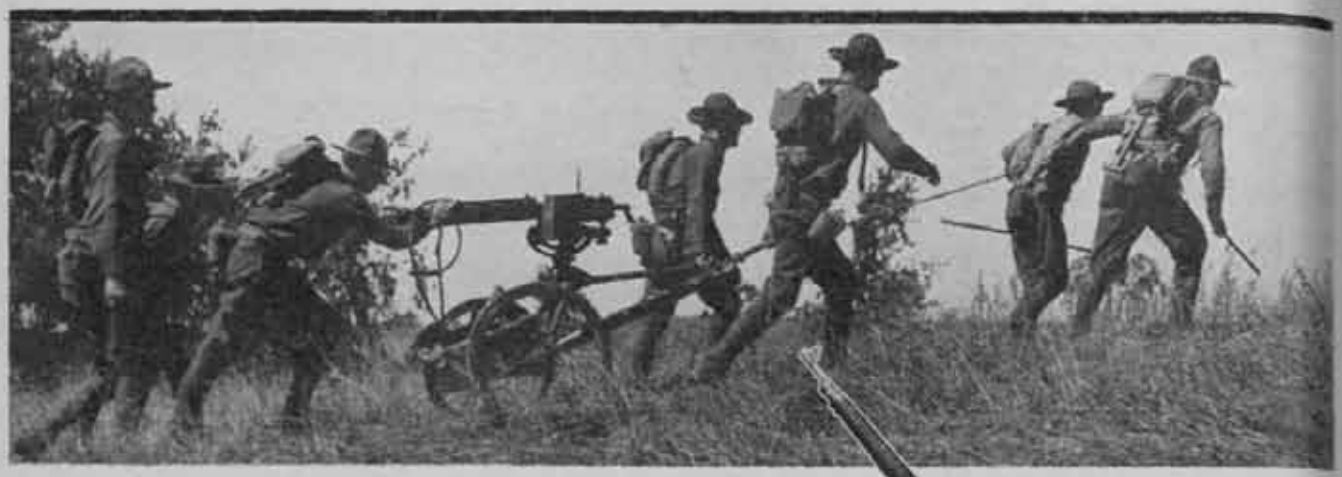

Above: Getting 'em up.
Right: "Wave, Aviator!"

"(3) To provide combined field training for all active components of the First Army so that they may function smoothly in the initial stages of an emergency."

The army commander's directive to his staff required the preparation of five exercises.

No. 1: 44th Division vs. 26th Division;
No. 2: 27th Division vs. 43d Division;
No. 3: 1st Division vs. an imaginary enemy.
No. 4: I Corps (2 divisions) vs. II Corps (3 divisions);
No. 5: I Corps (3 divisions) vs. II Corps (2 divisions).

No attempt was made to base the tactical situation on a general strategical situation owing to the fact that Pine Camp is so near the border that almost any strategical situation could have been construed as referring to a neighboring country. The maneuver area was so limited that motors and aviation were excluded from all exercises except No. 3.

Radio

"Here they come—there they go!" Blue tanks attacking through Red Infantry.

Prior to the arrival of the bulk of the army, camp sites were rented, releases from trespass secured on all other land within the maneuver area, and plans made to settle all claims for damage to private property that might arise. Quartermaster dépôts were established, railheads prepared, and headquarters organized for the First Army and the I and II Corps. The 1st Division was required to furnish much of its combat personnel for this purpose.

By August 1 the housekeeping arrangements had been completed, the organization of the umpire system perfected, and the umpires themselves as-

"Through the wheat." Advance guard moving on Hill 300

Scene of the big war.

sembled at Pine Camp for two weeks of schooling.

By the middle of August all units had arrived in the maneuver area and established bivouacs as shown on the area map. Organizations rolled into camp by train and motor as scheduled. True, the convoys of hired taxicabs left much to be desired, but after all they *were* taxicabs and not military vehicles manned by soldiers. As they rolled by many of us stood at mental salute in memory of those stalwarts who were charged with the move of the French taxicab army out of Paris. God knows they earned admittance to whatever place good soldiers go.

It is not necessary to set forth any of the incidents that this 1935 taxicab army gave birth to. It is enough to give the reader a general picture. Let him imagine five healthy, active, and mentally alert American Doughboys, equipped with packs and weapons, jammed into a passenger vehicle that was built for a maximum of five unencumbered civilians; at the wheel of the cab a typical American taxicab driver. Assume the cab five hours en route, with all hands sick and tired of the radio (these cabs were radio-equipped) and decidedly cramped, both physically and mentally. That's the picture—five perfectly normal young American soldiers with many ideas—all of them bad—and one taxicab driver with many ideas—none of them good. Requirement: Your solution (it will be as good as anyone's). Yet, everyone reached his proper destination.

The initial organization of the First Army is shown schematically below:

FIRST ARMY

I Corps	*II Corps*
26th Division (Mass.)	*1st Division (Regular)
43d Division (Me., N. H., Vt., R. I., Conn.)	27th Division (N. Y.)
	44th Div. (N. J., N. Y.)

*62d Coast Artillery (AA), Company F, 67th Infantry (Medium Tanks) and a detachment of the 1st Cavalry (Mechanized) attached to 1st Division.

There were no army or corps troops. The 26th Division had no medium artillery and was short some headquarters and medical units; the 43d Division was short some headquarters and medical units and had no quartermaster units; the 44th Division was short some medical and quartermaster units, had no medium artillery, nor engineers, and only three regiments of infantry; the 27th Division was short one infantry regiment; the 1st Division, after furnishing personnel for the overhead, had all its organizations below strength and was short over half of its artillery and many other units. All artillery was motorized except the two regiments (75-mm.) of the 44th Division. Thus, instead of an army of two corps, as contemplated by tables of organization, there were but five divisions concentrated in the area with an army and two corps headquarters superimposed.

Only a brief summary of the five exercises can be given.

EXERCISE NO. 1

26th Division vs. 44th Division. In this exercise both divisions were supposed to be in camps other than those they actually occupied; theoretically, the 26th Division was in bivouac five miles north of its actual bivouac area, while the 44th Division was theoretically in bivouac five miles to the south of its actual area. By the terms of the exercise these divisions were required to operate within a zone, approximately as follows:

West Boundary: Watertown—Evans Mills—thence north down the Indian River.

East Boundary: Black River (village)—Leraysville—Strickland Corners.

The 44th Division's mission required the capture of the high ground north of Trout Brook, while the mission of the 26th Division called for the capture of the high ground south of Pleasant Creek. New Jersey and New York moved cautiously north to meet Massachusetts. The fears of the umpires that a general mêlée would ensue when South Boston crashed into Jersey City never materialized. All leaders were too cautious.

EXERCISE NO. 2

27th Division vs. 43d Division. While Exercise No. 1 was being played, Exercise No. 2 was taking place further to the east. Each of the divisions, theoretically in bivouac beyond their actual bivouac areas, were given missions requiring their advance in a zone of action, roughly, as follows:

West Boundary: Great Bend—Sterlingville—thence R. R. tracks.

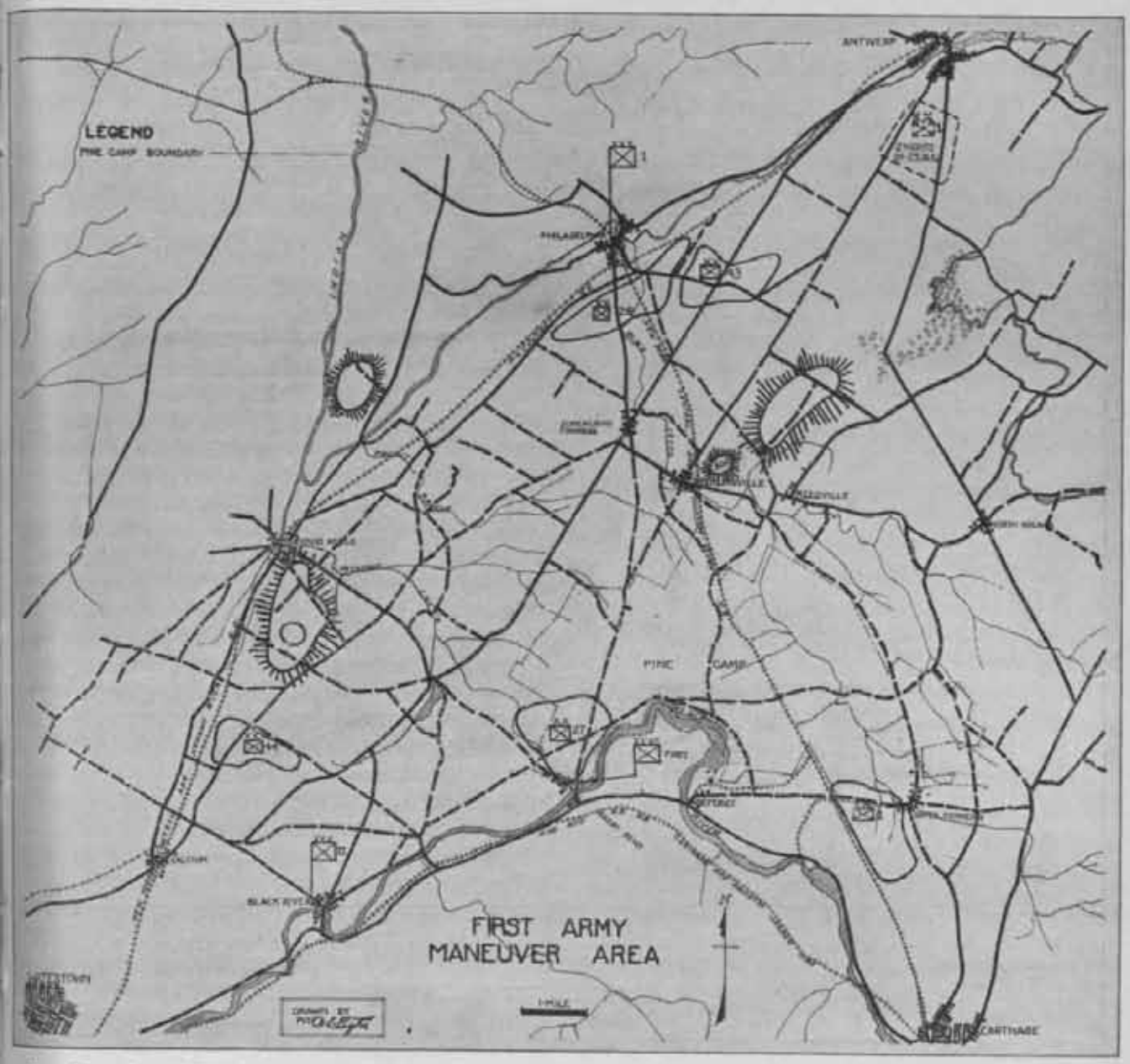

East Boundary: The Carthage-Antwerp highway.

The 27th Division was required to capture the high ground north of Reedville, while the 43d Division was directed to seize the high ground south of Reedville. Hill 300 (an arbitrary designation adopted by the umpires for want of a name) proved to be the focal point of the battle. Both divisions had it without a struggle, gave it up, then fought for it. Aggressive action was lacking on both sides.

In these first two exercises the division staffs prepared orders covering the theoretical march of their respective divisions to the vicinity of the actual camp sites. Based on these orders, and at the proper time (designated by the umpires) the leading units of the divisions crossed the control lines in the vicinity of their respective bivouacs (actual) and, under control of the area umpires, advanced to contact. These exercises occupied the entire day of August 21.

The following lessons were learned: commanders of all echelons must be aggressive; stress must be laid on training of personnel in the collection and dissemination of information (both friendly and hostile); there must be constant liaison between all elements; columns must be prepared to develop early for an attack; advance-guard artillery must not be too far forward; security measures must be carefully planned, must be constant and must be skillfully executed.

The purpose of the two exercises, namely, to furnish training for the units participating and to give experience in troop leading to junior officers, was successfully accomplished.

Exercise No. 3

1st Division vs. Imaginary Enemy. The 1st Division, in advance of its corps, with outpost to northeast of the camp site at Gates Corners (see map) was ordered to move to Pitcairn (see map of New York State) twenty-five miles distant and capture or destroy the advance elements of a hostile division (an infantry regiment and a

battery of artillery). The division, at greatly reduced strength, moved by motor in two echelons, contacted the enemy and accomplished its mission.

The motor column of approximately twenty-eight miles (about 650 motor vehicles) was still moving out of the bivouac area when the leading elements contacted the enemy. A unit umpire was charged with halting the leading echelon at a certain point by injecting theoretical hostile artillery fire into the situation. The column was halted as scheduled, but the umpire made the fatal error of permitting himself to become involved in a dicker with the 1st Division Doughboys. Says he, "You will suffer a ten per cent loss in personnel and equipment if you attempt to pass this point." Says they, "Done! We'll take the loss," and moved on, 90% strong, to a too early and entirely unscheduled climax. Moral: Never dicker with Doughboys.

Lessons from this exercise: radio communication is essential for proper control of a large motor column; portable radio communication equipment should be increased; rates and lengths of marches, and basic road spaces, as provided in our manuals, are out of date; thought must be given to the protection of motor columns from hostile aviation; distances should be greater in future motor moves than in this exercise.

Exercises Nos. 4 and 5.

These two exercises were designed to instruct the commanders of corps, as well as commanders of small units. In Exercise No. 4 the II Corps (1st, 27th and 44th Divisions, with attached coast artillery (AA), mechanized cavalry, and tanks) was directed to move from theoretical bivouacs (south of the actual bivouacs) to secure the line: North Wilna—Sterlingville—high ground two miles north of Evans Mills. The I Corps (43d and 26th Divisions) was ordered to advance from its theoretical bivouacs (five miles north of actual bivouacs) and secure the line: Bend in Indian River one mile north of Evans Mills—Swamp five miles south of Antwerp. Both corps advanced in a zone bounded as follows:

West Boundary: Watertown—Evans Mills—Indian River to the north.

East Boundary: The Carthage-Antwerp road.

The II Corps gained contact with the I Corps and forced it to take up a defensive position. The fast tanks from Fort Benning (attached to the 1st Division) moved from the vicinity of North Wilna across country to the northern slope of Hill 300 and then attacked through the Vermont regiment of the 43d Division and captured Hill 300. Georgia's contributions to the great war roared through the open-mouthed Green Mountain Boys who bravely—yet dangerously—stood their ground and blazed away pointblank at the strange here-they-come-there-they-go creatures. As one tank crashed through the woods its flying tracks neatly removed a large bush exposing, unharmed, three startled young Vermonters who had been lurking in its cover.

All participants spent a cold night in shelter tent bivouacs. On the following morning the II Corps commenced an attack against the I Corps' defensive position. At noon the exercise was called off.

Exercise No. 5 was almost a repetition of No. 4, except that the 1st Division, 62d Coast artillery (AA), mechanized cavalry, and tanks were taken from the II Corps and given to the I Corps. The I Corps, with a preponderance of artillery and with a superiority of two to one in infantry, forced the II Corps south to the Black River in the day and a half the exercise lasted.

Troops had been instructed to exercise the utmost care in protecting private property. Almost everyone played the game, but there were a few exceptions. During Exercise No. 5 a machine-gun platoon approached a four-strand barbed wire fence and, by dint of much sweat and labor, hoisted the whole works over the wire. At the risk of tearing seats out of breeches, all hands crawled through. The platoon then reformed and moved toward the enemy. At this point a lone straggler, a private, appeared on the scene. From his pocket he drew a pair of wire cutters, neatly snipped the four strands of wire, strode through the gap and hastened to join his disappearing platoon—all this with perfect nonchalance.

Periods between exercises were devoted to unit training according to schedules prepared within each division.

Interest was maintained at the highest pitch. This was due in large measure to General Nolan's strict enjoinder that all unit commanders keep their men constantly informed as to what was taking place.

Proper security measures were too often neglected. When we read articles such as Captain C. T. Lanham's "Fifty Million Frenchmen Can Be Wrong" (in the November-December issue of the JOURNAL) we are filled with compassion for the commander who failed to provide security for his force. Yet, in the face of the enemy—actual or only represented—this obvious safeguard is all too often neglected.

Daily trains dropped Class I supplies at each division railhead, to be distributed to the troops by the various unit supply officers. Daily menus, prepared in advance for the entire period of the maneuver, were uniform throughout the army. Owing to inexperience in handling supplies, the first day or so found some units short of food, but practice soon remedied this. In a few days all organizations were being properly and amply fed.

Motors played an important part in supply and transportation. Units were moved by motor transport from points as distant as eastern Maine, and without any serious accident. Motor convoys rolled into camp from far destinations on close schedule. Although the limited area precluded the tactical use of motors, much valuable experience was gained with them in the transportation of supplies and troops. A shortage of motors resulted in the rental of a large number of retired New York City taxicabs, a necessary expedient, since other vehicles were not available for hire.

Despite the few motors involved in the tactical exercises, the necessity for constant training in their handling was evident. When not actually moving, many units seemed to have no idea what to do with their motors. One unit moving in column on a wide, paved highway, optimistically placed branches on top of its trucks as camouflage from aerial observation. A hostile aviator, observing them moving along the road would, no doubt, have been deceived, exclaiming, "Ah! A flock of trees moving along U. S. Highway No. 11 en route to an Arbor Day celebration."[1] And, later, when Death's touch had caused the once green leaves to turn brown, "Nothing to worry about. Just a tree funeral."

Prior to the maneuver, organizations were required to equip themselves in accordance with tables of equipment. There was a great hurrying and scurrying to do this, for many units had been worrying along with the bare necessities. As a result of this maneuver, the participating units are now fully equipped and ready to take the field.

The newspapers mentioned the physical combats between soldiers of opposing sides. This seems to indicate that the men were interested. These fighters were intensely alert and, when out of sight of their officers and the umpires, staged minor battles. It is only natural that Private Brown of a Maine regiment would want to capture Private Smith of a New York regiment. And it is equally natural that Smith would resist capture. And when Brown, drawing a bead on Smith, cried, "Come on over, you're my prisoner," Smith probably replied, "The hell I am. Try'n get me"—and the fight was on.

There were no major tactical lessons learned from the First Army maneuver and no generals were convinced by experience that it was best to employ the reserve division around the hostile right flank. But Private John Soldier took the field and learned to care for himself. He advanced against a strange enemy over unfamiliar ground. He ate from field ranges, drank water from Lyster bags, and learned to bathe when—and if—he could. He saw strange weapons, of which he had only read—antiaircraft guns, airplanes, artillery, fast tanks, mechanized cavalry, huge motor convoys, etc. He participated in a maneuver in which thirty-five thousand others took part and in which all arms were represented. He learned which of his leaders were leaders and which were stuffed shirts. He learned how to be a field soldier, how to be a leader, and how to care for himself in the field. Now he is a veteran of the big "war."

Today, when we make so much over our map-problem training, when we throw brigades and divisions hither and yon and make tactical decisions of great magnitude —all on paper—it chastens our military spirit and improves us professionally to leave all the paper divisions and corps behind and go into the field where the big problem is the leading of the squad, the platoon and the company.

From a grand-scale tactical standpoint the First Army maneuver was not a success. From the standpoint of real training—and it was designed for just that—it was a grand success. It put soldiers in the field—where they should be—and having put them into the field, it separated the men from the boys in no uncertain manner.

[1]EDITOR'S NOTE: Were the aviator properly versed in his Shakespeare we are convinced that he would not pass up this opportunity to declaim:

"—— *Fear not till Birnam Wood*
Do come to Dunsinane—and now a wood
Comes toward Dunsinane.—Arm, arm, and out!"

The Need for National Defense

"During the past year there has been a growing consciousness on the part of the American people of the need for a more adequate and a more modern defensive establishment. This is due not to any fear of an impending war, for our relations with foreign countries have continued friendly, but rather to a recognition that, in the absence of any effective assurance of permanent peace, a great country needs an efficient military force to provide against unforeseen eventualities.

"It cannot be too often repeated that our national policy contemplates no aggressive action; it is entirely defensive. Our Military Establishment, therefore, should be one designed to defend our homeland and overseas possessions. Such a pacific policy does not call for a large standing army, but it does contemplate a highly efficient nucleus, capable of rapid expansion in time of emergency.

"The Army of the United States, composed of the Regular Army, the National Guard, and the Organized Reserves, almost ideally meets the requirements of our democratic country. However, since 1920 considerations of economy have operated against establishing and maintaining the authorized force, hence for a decade and a half we have had an army far below the minimum strength which a country of the population, territorial expanse, and wealth of the United States should maintain in order reasonably to insure its security.

"It is a pity that we should have become so oblivious to the bitter lessons of the World War as to allow our defense to dwindle until, if another war should be forced upon us, we should, as usual, be unprepared for effective action. In that event we should find that our so-called 'economies' have in reality been a hideously extravagant waste of money and lives. With an army that is, and always has been, scrupulously loyal and subservient to the duly constituted civil authorities, the danger of so-called 'militarism' would appear to be remote indeed."

Extracted from the annual report of the Secretary of War to the President of the United States.

Organization of Guns in an Antiaircraft Regiment

By Major Willard Irvine, C.A.C.

SINCE the regimental organization for antiaircraft artillery was adopted in 1921, substantially in its present form, sufficient time has elapsed and sufficient progress has been made in the development of matériel and tactics to warrant a reëxamination of some of the questions that arise in a study of the organization of antiaircraft guns, machine guns, and searchlights. The organization of guns, only, will be considered in this article, under the following headings:

(1) The minimum number of fire units required to defend an objective against an attack by bombardment aviation.

(2) The proper number of guns in a fire unit.

The Number of Fire Units Required

A fire unit is two or more guns equipped for independent fire. Our antiaircraft artillery regiment employs four guns as a fire unit. At the last Antiaircraft Artillery-Air Corps Exercise, held at Fort Knox in 1933, an antiaircraft artillery regiment defended a rear area objective, about one mile square, with four-gun batteries of four guns each—one battery being simulated. The gun battalion commander in his report stated:

> "It is recommended that a thorough and exhaustive study be made of the reduction of the number of guns in a 3-inch gun battery and an increase of 3-inch gun batteries in a regiment or the equipping of gun batteries with the required matériel so that platoons may operate independently."

The reason given for this recommendation was that a more uniform fire would be possible over the critical zone* if the number of fire units was increased. Based upon an airplane speed of 200 miles per hour and an altitude of 15,000 feet, three gun batteries (fire units) do not provide for a sufficiently uniform coverage for the critical zone. This may be seen from an examination of Figure 1, which shows, for an objective of one-half mile radius, part of the critical zone covered by two batteries, part by one battery, with nearly one-fourth uncovered.

When present tables of organization were adopted the speed of a bombardment airplane was about 100 miles per hour. Based upon that speed, three fire units were adequate to cover the critical zone. The doubling of the speed of bombardment airplanes to 200 miles per hour almost quadrupled the area of the critical zone; as a result three fire units are no longer able to cover it. A comparison of the areas of a critical zone for a speed of 100 miles per hour and 200 miles per hour is made in Figure 2.

In considering the coverage that the critical zone should have, Coast Artillery Field Manual, Volume II, Part one, states: "The area defended and the critical zone should be covered entirely by the fire of at least one gun battery." A principle for antiaircraft artillery, generally accepted, is: *The area defended and the critical zone should be covered entirely by the fire of at least one gun battery and an average of two over the critical zone is essential.* An average of two gun batteries is required since one battery cannot take a sufficient number of targets under fire during the brief period usually required for an attack and also since a battery may be temporarily disabled or may be neutralized by attack aviation which sometimes supports bombardment aviation. *To satisfy the principle stated, for an objective appropriate in size for defense by a regiment, six fire units are required.* This may be seen by an examination of the following table compiled from Figure 1 and similar drawings showing the coverage of the critical zone by from three to seven fire units.

Number of Fire Units	Average Number of Fire Units Covering the Entire Critical Zone	Average Number of Fire Units Over Inner Half of Critical Zone*
3	0.88	1.3
4	1.3	1.6
5	1.5	1.9
6	1.7	2.5
7	2.2	3.0

*During the last 30 seconds the airplane is subjected to more effective fire since the probability of hitting is increased by the decrease in range and by the necessity for rectilinear flight while the bomb-sighting operation is performed.

COVERAGE OF THE CRITICAL ZONE EMPLOYING THREE FIRE UNITS

Figure 1

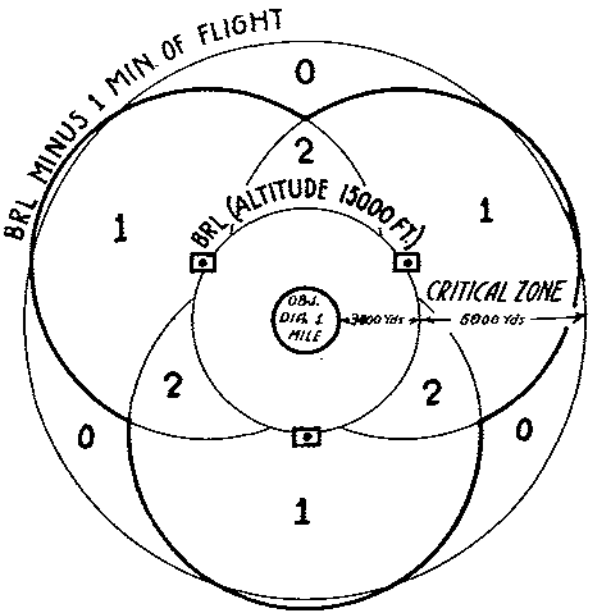

*The critical zone is the area around the objective whose width represents one minute of flight immediately preceding the release of bombs.

COMPARISON OF CRITICAL ZONES

FIGURE 2

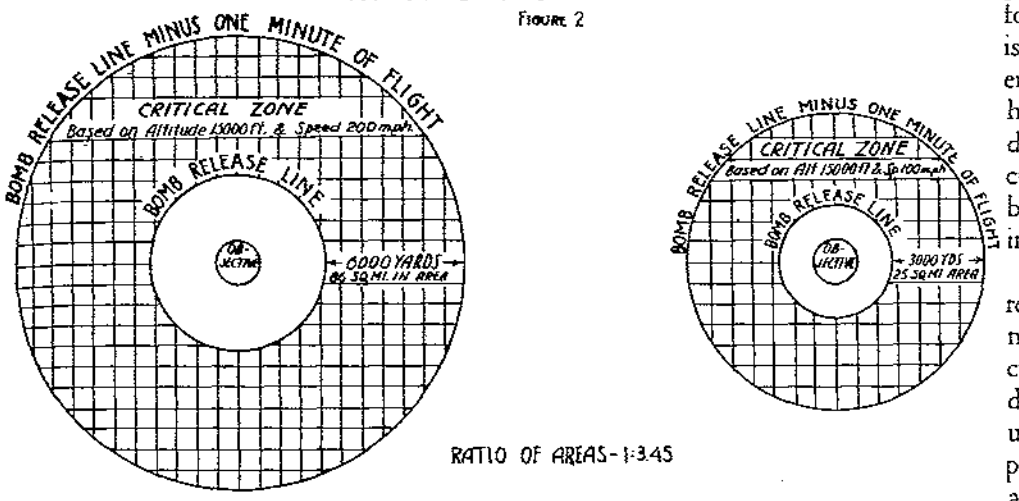

Some of the combinations by which the necessary six or more fire units may be obtained are:

Number Batteries in a Battalion	Number of Guns in a Battery	Total Guns	Number of Guns in a Fire Unit	Number of Fire Units
3	4	12	2	6
3	6	18	3	6
4	4	16	2	8
4	6	24	3	8
6	3	18	3	6
6	4	24	4	6

The Number of Antiaircraft Guns in a Fire Unit

On the basis of six fire units being necessary to cover the critical zone with an average of two fire units, an attempt will be made to establish the most suitable strength in guns of the fire unit. Some of the desirable characteristics for a fire unit of antiaircraft guns are:

(1) The fire unit should be as small as practicable in order to engage more targets.
(2) The volume of fire should be sufficient to give a high degree of probability of securing a hit during the period of time that a bomber is under fire.
(3) The number of guns in a fire unit should be sufficient to give a barrage or shotgun effect to the pattern.
(4) The fire unit should be large enough to be economical in personnel and accessory matériel.

In an attack by a force larger than a squadron, made in the shortest time practicable, the small number of targets which can be taken under fire by the gun batteries of an antiaircraft artillery regiment, as now organized, is a serious disadvantage to the ground defense. For a given number of guns, and from the sole viewpoint of the number of targets which can be engaged, a two-gun fire unit is preferable to one of a greater number of guns.

In considering the second of these desirable characteristics, it is necessary to determine how long a bomber will ordinarily be under fire and the number of rounds required to secure a hit during that period of time. An airplane flying at a speed of 200 miles per hour travels a horizontal distance of 6,000 yards in about one minute. The maximum effective horizontal range of a 3-inch antiaircraft gun is, also, 6,000 yards. For fire units located primarily to cover the critical zone, one minute represents approximately the time which an enemy airplane will be under fire before the bomb release line is reached. Here the bomber will drop its bombs, perhaps turn 180°, and withdraw, in which case antiaircraft gun fire would probably be shifted to another incoming bomber.

The number of rounds required to secure a hit can not be determined with accuracy. World War records do not give a proper measure of the accuracy of the present day antiaircraft gun; and target practice reports do not represent war conditions. These two are, however, our best sources of information. From a study of both, it is estimated that fifty rounds of fire is the average number required to secure a hit on a bomber. Therefore, a fire unit should be able to deliver at least fifty rounds in a minute. Two guns to a fire unit will give fifty rounds per minute in theory, but practical experience shows that since guns go out of action, a three-gun fire unit would be a surer means of satisfying this requirement.

In firing at a target which may move in three dimensions, it is desirable that a fire unit of antiaircraft guns give a barrage or shot-gun effect to the pattern. Such an effect cannot be secured by a fire unit of less than three guns.

An increase in the number of guns in a fire unit decreases the relative amount of fire control equipment required with a consequent decrease in personnel and cost. The new antiaircraft gun, with its cast barrel, can

COVERAGE OF CRITICAL ZONE EMPLOYING SIX FIRE UNITS.

FIGURE 3

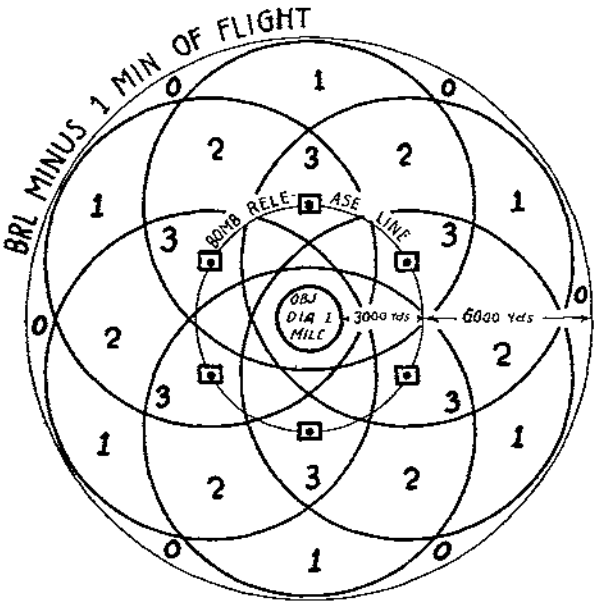

very easily be produced in quantity; whereas, the production of antiaircraft artillery fire control equipment would be slow.* Based upon this condition, it seems advisable to employ four guns to each set of fire control equipment.

To summarize: For a given number of antiaircraft guns, a fire unit of two guns, in comparison with a fire unit of three or four guns, has the advantage of engaging more targets and is more difficult for attack aviation to neutralize, since more positions must be neutralized. A fire unit of two guns has the disadvantages of a smaller volume of fire, a less effective barrage pattern, and is not as economical in matériel and personnel.

A fire unit of three antiaircraft guns has all the advantages and disadvantages of the two-gun fire unit but each to a less degree.

A four-gun fire unit, in comparison with a two- or three-gun fire unit, has the advantages of volume of fire, and effective barrage pattern, and economy in personnel and matériel. It is also favored when consideration is given to the slow production rate of fire control equipment. Another reason favoring a four-gun fire unit is that frequently *one* or more guns are temporarily out of action. The consequent reduction in volume of fire would be a serious handicap with a two- or three-gun fire unit. The disadvantages are that, for a given number of guns, fewer targets are engaged and the probability of the neutralization by attack aviation is greater.

It is concluded that six fire units are essential for the antiaircraft defense of an objective against an attack by bombardment aviation, and that each of these fire units should have four guns. This will require 24 guns, which is about the minimum for a reasonable defense.

A number of experienced antiaircraft artillerymen favor a reduction of the number of guns in the present fire unit of four guns. Practical field tests are lacking, except with the present organization of three fire-units of four guns each. Field tests, including joint exercises with the Air Corps, over a considerable period of time, with at least six fire-units of both two and three guns, would obtain valuable experience and information. This might be accomplished by giving additional personnel and equipment to two antiaircraft gun battalions; one battalion to employ six fire-units of two guns each and the other battalion six fire-units of three guns each, thus furnishing a continuous comparison with the four-gun fire unit.

*The present slow production rate may be temporary, as an effort is being made to simplify the director.

Important Notice to Subscribers

We want you to receive promptly and regularly (bi-monthly) your copy of the Journal; this will depend, primarily, on whether you keep the Editorial Office, 1115 17th Street, N. W., Washington, D. C., informed of any change in your address. Postmasters are required to forward, under Sec. 769, Par. 10, Postal Laws and Regulations, second-class mail addressed to members of the U. S. Military or Naval Service when change of address is due to official orders. Regardless of whether or not this regulation is complied with, your address on our mailing list is incorrect unless you notify us of each change. Incorrect address causes an annoyance to you, an unnecessary expense to the Association, and a nuisance to the mailman.

To insure receiving your copy of the Journal on time (we like to think that you wait impatiently for the appearance of each new issue) and to save your Association money, we urge subscribers to notify us promptly of any contemplated or accomplished change in address. A penny postcard will do the trick; or ask your Postmaster for Form 22-B, fill it out and mail, 1c postage required. When advising of change in address give the following information:

(Name)	(Rank)
Present Address	New Address after (give date)

Guns were kept well back from the windows to prevent their discovery.

The Fist in the Dyke

By Major John R. Mendenhall
Infantry

It appeared to be merely a matter of hours before the Allied dyke crumbled and the grey wave rolled southward over Paris.

At 2:40 A.M., May 27, 1918, forty-one German divisions suddenly struck the weakly held Chemin des Dames position. By 8:00 A.M. that position had been overrun; by noon German battalions were crossing the Aisne; by nightfall the spearhead of the great thrust had reached the Vesle. The road to Paris stood invitingly open. Allied reserves flung against the flanks of this deepening salient crumpled under the German juggernaut. The drive, now almost a triumphal march, continued. On the 29th, Soissons fell and the world learned that Paris was being shelled. By the 30th, Jaulgonne and Château Thierry were in German hands and Berlin thrilled to the Crown Prince's laconic *communiqué*—"We stand along the Marne!"

Hour by hour the German tide rose against the Marne barrier. By the 31st it appeared to be merely a matter of hours before the Allied dyke crumbled and the grey wave rolled southward over Paris. It was to dam the threatened torrent at Château Thierry that the fist of the 7th Machine-Gun Battalion was thrust in the weakened dyke.

The 7th Machine-Gun Battalion, a Regular Army unit, organized in 1917 from trained men of the 4th and 7th Infantry Regiments, consisted of two companies and a headquarters detachment, totaling 20 officers and 375 men. Each company was organized into three four-gun platoons with four reserve guns as replacements. Intensive instruction produced reasonable proficiency with the Hotchkiss gun but the trucks authorized the battalion in December were to be another matter. Not until May 24 did the long awaited motors arrive. Six days later they were used in an urgent tactical mission.

In all, the battalion received 52 Ford Model T trucks of the commercial half-ton variety, 6 small touring cars bearing the same distinguished name, and 24 Indian motorcycles, a few of which boasted side-cars. A canvass of the companies produced only a handful of experienced drivers. As a result our trucks met with many a minor accident. By May 30, hard work, patience, and perseverance brought their own reward—the train could be formed, started and halted with only occasional collisions. Eighteen years ago such a feat fell logically in the class of seven-day wonders.

In summary, then, the 7th Machine-Gun Battalion on the eve of its great adventure enjoyed a superior morale and discipline, and boasted a high state of proficiency in all phases of its training save its work with the newly acquired motors. Its equipment, on the other hand could not be classed as better than fair: its machine guns were old and its trucks were to prove inadequate for the loads required.

Now the 3d Division had been scheduled to occupy a quiet sector north of Toul about June 14 for training, but the German break-through along the Chemin des Dames changed all this. On May 30 this division was ordered to join the French XXXVIII Corps that had been

flung into the path of the hard-driving German divisions in the vicinity of Château Thierry.

At 10:00 A.M., May 30, the 7th Machine-Gun Battalion received a curt order directing it to proceed at once by its own transportation from La Ferte via Arcis and Sezanne to Conde-en-Brie and report there to the French headquarters. Although rumors of a great disaster along the Chemin des Dames had reached this newly arrived unit, no one dreamed that it would be called on. Therefore the division order struck with the suddenness of a thunderbolt. A battalion warning order was at once issued directing companies to load and to report when ready to move. The men were recalled from drill and essential equipment hastily assembled and checked. Two trucks were assigned to each gun-squad. The first carried half the squad, the gun and some ammunition; the second carried the remainder of the men and additional ammunition. Touring cars were assigned to the personnel of company and battalion headquarters; runners, scouts and key noncommissioned officers were furnished with motorcycles. Eight heavy trucks were secured from the division train for extra ammunition, gasoline and baggage.

At 2:30 P.M. the column cleared La Ferte led by battalion headquarters. Motorcycle patrols went forward to reconnoiter and mark the route. Company motorcycles were used principally to check the column, to maintain contact, and to carry spare parts to disabled trucks and guide them back to the column. Each truck driver carried an itinerary of the towns he would pass through but only company commanders had maps. Each truck carried a reserve can of five gallons of gasoline.

A twenty-mile clip soon over-extended the column and a twelve-mile rate was finally settled on as the fastest practical speed. Trucks designed for a half-ton load carried half again that weight and protesting springs promptly bellied down on axles. On steep hills the men were obliged to detruck and walk, sometimes push. The tires of twenty years ago, though out of their infancy, were not yet through adolescence; add to that the fact that the celebrated Model T's had been equipped with deteriorated stock, and the endless tale of endless punctures need not be elaborated. Delays for minor repairs were frequent.

At 9:00 P.M. the convoy halted near Sezanne to rest the men and refuel and overhaul the motors. Here the whole battalion bogged down until midnight because the thrifty French S.O.S. (no typographical error) at the Sezanne depot would not part with a gallon of gas—a Gallic gesture that Americans came to learn only too well. So there the convoy stood until the trucks loaned by the division train came up with the surplus gasoline. The empty five-gallon cans still carried by each truck expedited the refueling.

On resuming the march, all lights were extinguished. This was a new and somewhat harrowing experience for our half-trained drivers, but the French sun, an early riser in May, soon put in its appearance, to the vast relief of everyone. With daylight came the refugees, a grim reminder of the business ahead. Starting with a few carloads, these poor people increased rapidly until they formed a continuous stream, double banked along the narrow road, with every man for himself and all in a hurry. Women and children shared space on large hay wagons, with feather beds, chests of drawers, chicken coops, and chairs, while the men led cattle and horses. Their faces were haggard with weariness, but all could smile and wave encouragement to "les Américains," who alone, were moving north against this current of fear and depression. Meanwhile, it had become virtually impossible to keep the train intact. Toward the end of the march there were seldom as many as ten cars in any group.

As the battalion neared the front, detachments of infantry, heavy siege guns and supply wagons, both French and British, appeared in the intervals between the refugees, all retreating—the wreck of a defeated army. North of Montmirail there was less confusion. Here artillery was still in firing positions and squadrons of La Tour's 5th Cavalry Division were standing to horse in formation near the road, looking rather medieval with their bannered lances.

At 12:30 P.M., May 31, the head of the battalion halted at Conde-en-Brie, having come 110 miles in 22 hours largely over traffic-choked roads. Radiators were steaming and gasoline low when they drew up in the marketplace.

The battalion commander at once reported to General Reynouard, French Army, and was ordered to move his battalion to Château Thierry without delay. Time, said the General, was all-important. So, trusting to luck that the Model T's would manage the few remaining miles without refueling, the convoy up-anchored and squeaked its way out of Conde-en-Brie. But luck played a dirty trick, for shortly after leaving town the head of the column encountered a steep grade. The gravity feed, coupled with the low gas supply, proved too much for the 1918 Fords; they took a look at the hill, uttered one or two despairing gasps, and died with their boots on. The men detrucked and in approved Doughboy fashion hiked the last four miles carrying their guns and a limited supply of ammunition. Packs and additional ammunition were brought on later in the trucks, a few of which were refueled by draining the tanks of the others before the arrival of the heavy trucks with their reserve drums.

At 3:30 P.M., the leading elements of the battalion trudged into Nesles-le-Montagne, the last cover before entering Château Thierry. Just south of Nesles French batteries were working on the position located on the heights north of Château Thierry. It was not deemed safe to move the trucks further forward without reconnaissance. Accordingly, a base was established at Nesles

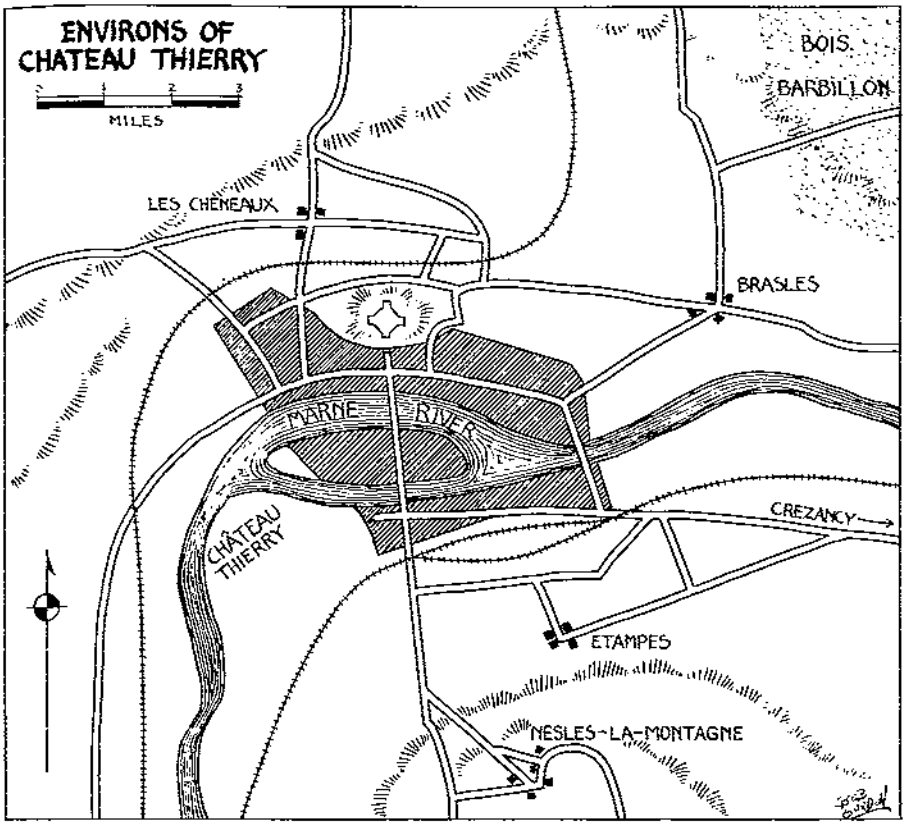

Map 1

and the company commanders went forward to report to Lieutenant Colonel Benezech, commanding the French 33d Colonial Infantry at Les Cheneaux, just north of Château Thierry.

Upon arriving at the stone bridge over the Marne, in the center of the city, Captain Charles H. Houghton (commanding Company A) accompanied by the battalion liaison officer (French), met a French general to whom he stated his mission. This general (Marchand, of Fashoda fame, then in command of the French 52d Colonial Division) said that Colonel Benezech had either been killed or captured and that he was taking personal command. Thereupon he directed the 7th Machine-Gun Battalion to move up its guns at once and go into positions on the south bank of the Marne with the mission of covering the bridges and protecting the withdrawal of the French to the south bank. The bridges, he stated, were being mined and would be destroyed as soon as the withdrawal had been completed. General Marchand was *unequivocally specific*—the battalion would remain in position until relieved. Captain Houghton promptly transmitted these orders to Major Taylor, the battalion commander, in Nesles.

The city of Château Thierry straddles the Marne River, the major portion being on the north side where it sprawls about the base of a prominent bluff. A fortified château stands on this bluff and from its walls can be seen not only the entire city, but the level plain between its southern limits and the wooded hills of Nesles. (Map 1). This plain, some 1500 yards wide, affords but little cover. The Marne and a canal form an island within the city. Rue Carnot, the principal north-south street, is almost dead straight and can be easily enfiladed from the château. Starting from the château, this street strides the Marne via a large stone bridge (hereafter referred to as the west bridge), crosses the island and then the canal on a second stone bridge; thence it runs through a square called Place Carnot, crosses a third bridge over the railroad, and finally drives headlong across the plain to Nesles.

A main highway follows the north bank of the Marne. This opens into a long quay-like plaza opposite the west bridge and then continues eastward to the town of Brasles. Another east-west road (referred to as the Crezancy road), passes through Place Carnot on the south bank.

The southern part of the city contains rather extensive railroad yards. A combination wagon and railroad bridge stands just beyond the island on the eastern edge of the city (hereafter referred to as the east bridge). In July, 1918, these two bridges were the only means of crossing the Marne for five miles in either direction; hence the importance of the city.

Except for a short period in 1914, the Marne valley had not been in the war zone. Buildings had not been damaged by shell-fire and the surrounding country was in a high state of cultivation, wheat being the principal crop. Both slopes of the valley are steep and form natural defensive lines. Such, in brief, was the picture that unfolded before the 7th Machine-gun Battalion on that hot May afternoon seventeen years ago.

On receiving General Marchand's orders, the battalion commander directed both companies to send gun-squads to the Place Carnot. Unfortunately, a rapid movement of the gun-squads was not easy to execute. The few trucks that had reached Nesles were short of fuel and the gun-squads, all with limited ammunition, were in most cases short of men. Still, by 4:30 P.M., each company had at least one platoon assembled in the designated positions and the trucks were shuttling back for others.

The river front was divided between companies: A to the west and B to the east. Each was made responsible for a bridge and a flank. Positions were selected and some guns were sited before dark. Company A, from houses along the river bank, covered the west bridge, with three sections, while Company B covered the east bridge, with two sections. A third section from Company B covered the Crezancy road and the right flank.

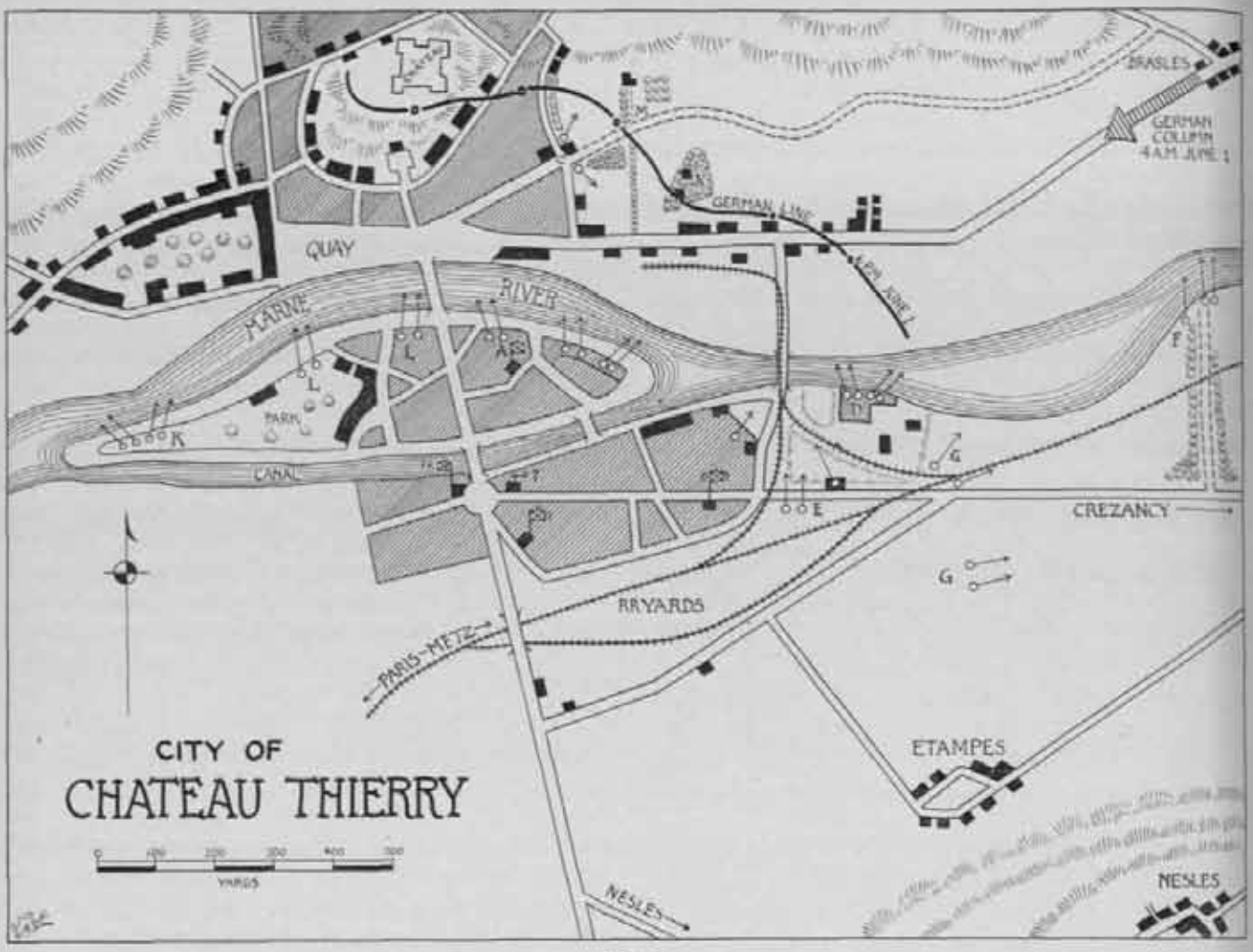

Map 2

During the night, battalion and company commanders made a thorough reconnaissance of the entire front. Based on this reconnaissance, interlocking bands of fire were established from the wooded road east of the town to include the junction of the canal and river on the west. The new gun positions were taken just before daylight on the morning of June 1.

Meanwhile, pursuant to orders from the French, one section of Company A, under Lieutenant John T. Bissell was sent across the Marne to the northeast exits of the city to cover the withdrawal of the French via the west bridge. They were escorted to their posts at 5:00 P.M., by a French rifle platoon.

In crossing the bridge this section received some scattered fire but suffered no casualties. Advancing cautiously to the tower marked C on Map 2, one gun was mounted to fire north and east and the other held in reserve pending further reconnaissance. German snipers occupying two Adrian barracks, a gateway at M, and some houses in a grove at N, were driven back by the French riflemen, and by 7:00 P.M. a line along a road and wall some 150 yards east of the tower had been established. A French machine gun covered the south flank of this line, so Lieutenant Bissell mounted his second gun near the tower to strengthen the north flank.

The other guns of the battalion were held in company and battalion reserve during the night. Orders emphasized the need for concealment and silence. Guns were to be fired only on the direct orders of an officer (one was posted with practically every section). In Company A, however, the destruction of the west bridge was to be a signal for all guns to open fire immediately on suitable targets.

On June 1 the sun rose at 3:45 A.M. presaging a clear day.

Lieutenant Cobbey, with four guns in the sugar refinery (D) had sited in on the bridge and eastern approaches the previous evening, but Lieutenant Funkhouser who during the night had been moved with three guns to the wooded road (F) had still to see the terrain to his front. Now, as the light increased, he discerned activity on the road leading from the village of Brasles. German troops, marching in column of squads, were moving along this road toward Château Thierry. Without hesitation he opened fire; this was immediately taken up by Cobbey's guns at the sugar refinery.

At first the fire was ineffective and the well-disciplined German troops kept on. However, as the light improved the fire was accurately adjusted and great holes were blasted in the column.

Picture the situation in the eyes of its commander. The defeated Allies were on the run. For several days resistance had been almost negligible. Yesterday afternoon covering troops to his front had occupied Château Thierry almost without firing a shot, and his battalion, ending a night march, would probably bivouac south of the Marne. Perhaps it had been a longer march than usual; prudence doubtless called for reaching a wooded bivouac before daylight. But wasn't it better to continue a bit further and cross the Marne, the last serious barrier on the road to Paris? The Allies had been so terribly mauled that any serious resistance was virtually out of the question. Spirits ran high. Probably there was singing as the column swung along and perhaps its commander quietly swelled his chest as he contemplated the medal that might soon rest there.

Then, suddenly, the clatter of machine guns—bullets whining overhead—men dropping—consternation—confusion! Surprise—that principle so often stressed but so seldom employed—and volume of fire on a concentrated target were successfully combined on this clear June morning to bring the triumphal march of a veteran German battalion to an abrupt and bewildered halt.

The Germans deployed in the waist-high wheat growing between the road and the river. Hidden from view, but still under fire, they moved in small groups by short bounds toward the river bank, threatening the east bridge. Soon Funkhouser's guns on the wooded road were located and German machine-gun fire, followed by artillery fire, forced their withdrawal at 7:00 A.M. to more protected positions. The section had received six casualties.

Cobbey's guns, safe within the refinery building, remained undisturbed and continued to cover the eastern approaches to the bridge. The Germans, now under the protection of their own machine guns, occupied a group of buildings opposite the factory. Here they massed several times in an attempt to reach the bridge, but each time the refinery guns, sweeping the 200 yards of bare flats, drove them back with losses.

German artillery fire now increased steadily. Even though defiladed, machine guns other than those in the lower floors of buildings were maintained in position with difficulty. Command posts were moved into cellars and connected by telephone as the day wore on. Again and again shell fire cut the wires. Reconnaissance groups and runners were forced to keep behind houses; to cross a street was to play tag with a German sniper. Gas, greatly feared at first, proved to be dangerous only in the immediate vicinity of a shell-burst, and such areas could usually be avoided. But it was a different matter indoors; command posts had to resort to double partitions made of wet blankets to avoid the use of gas masks.

There had been no opportunity for sleep since May 29, the last night in La Ferte, and though a system of reliefs enabled men to snatch some rest when off duty, the shell-fire and general sense of insecurity had worked them into a high state of nervous tension. This was evidenced by sharp commands, impatience bordering on intolerance, and an inability to grasp new situations quickly. Orders were not always carried out as issued. Later this condition jeopardized the battalion's mission.

The supply route, which followed the Rue Carnot, was under enemy observation. Trucks and motorcycle messengers were frequently under fire. Finally, after one officer was killed by a direct hit on the truck in which he was riding, this road was used only at night. On June 1 both rations and ammunition were scarce articles. The food question was solved to some extent by provisions taken from local shops under authority of the French commander, and the ammunition problem was solved by the providential discovery of a dump while moving Company A's command post.

To return to the tactical situation, the French Colonials on the north bank of the river were opposing the Germans in the wooded sections east and north of the city. By noon small French detachments had captured the houses at N and one of Lieutenant Bissell's guns had been moved to the gate at M. However, German fire of all kinds constantly increased and by 2:00 P.M. the situation of all French troops north of the river was becoming critical.

Later in the afternoon additional German troops were concentrated in the Bois de Barbillon northeast of Brasles (Map 1). Everything indicated a determined attack against the bridges soon after dark. Meanwhile, the enemy had crossed the Marne at Jaulgonne, some five miles to the east.

Anticipating a possible attack from the east, the battalion commander now ordered Company B to be prepared to cover the remainder of the battalion from positions south of Etampes (Map 1) in case of a withdrawal. Based on these orders second-line positions were selected by the 1st and 3d platoon commanders during the afternoon, although no guns were available to occupy them.

The right flank was also reinforced and the four reserve guns, without crews, were held at the battalion command post in the Place Carnot.

To summarize, on the evening of June 1, just prior to the main German attack, the guns of the battalion were distributed as follows from right to left (Map 2):

Company B

- 4 guns east of the railroad, the 3d platoon covering the right flank of the battalion (G).
- 4 guns in building of the sugar refinery, the 2d platoon covering the river and the approaches to the east bridge (D).
- 4 guns generally along the Crezancy road, the 1st platoon covering the east bridge (E).

Company A

- 2 guns near the east end of the island crossing fire with the refinery guns.
- 2 guns in the yard in the center of the company sector, enfilading opposite streets and the square north of the west bridge.
- 2 guns in the warehouse enfilading the river and square.

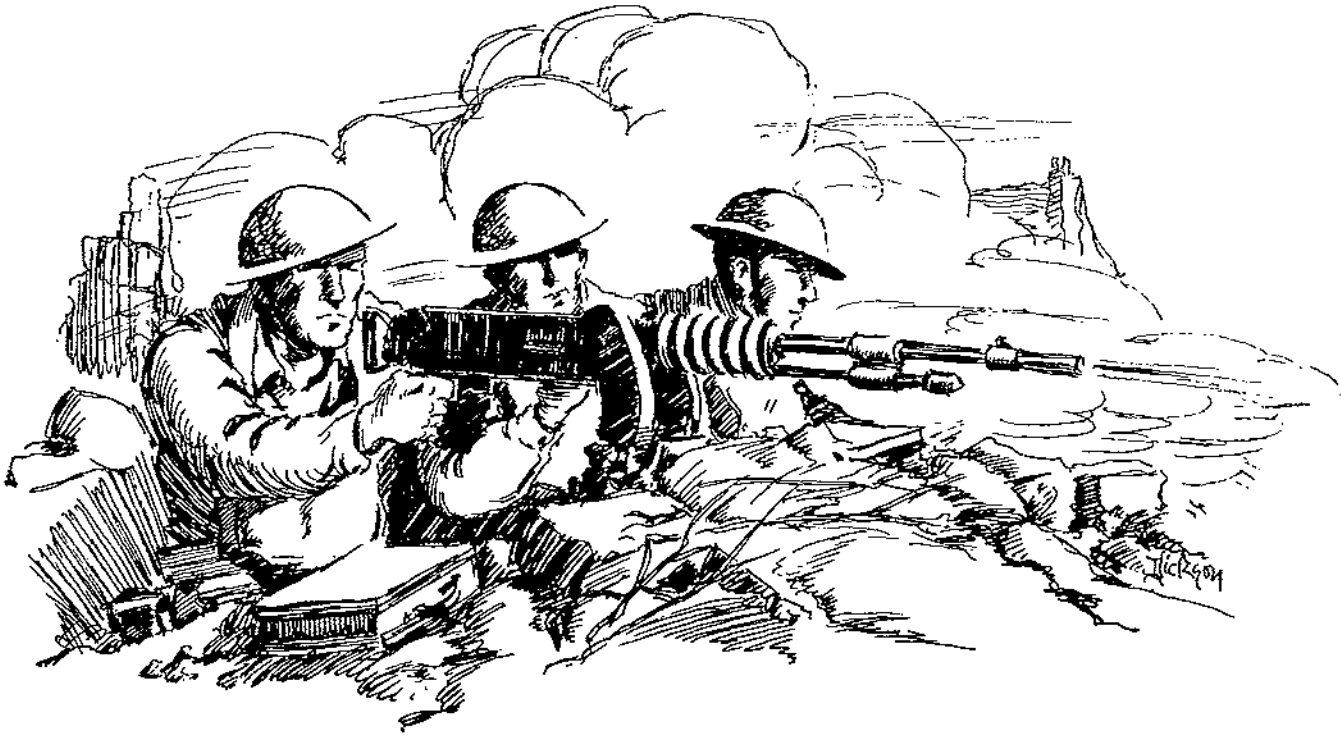

Here was the crisis.

2 guns under Lieutenant Bissell north of the river.
4 guns (French) west of the main bridge covering the square (L).
4 guns in the park at the west end of the island covering the west flank (K).

Company Reserves

Company A: 1 gun near the command post.
Company B: 3 guns near the command post.
Battalion Headquarters: 4 guns, borrowed from companies and without crews, near the Place Carnot.

At dusk on June 1 the German artillery fire which now for the first time included guns of heavy caliber increased still more. The scattered fire of a few exhausted French light batteries was the only Allied response. By 8:40 P.M. the four French machine guns at L (Map 2) had been silenced, and Company A was ordered to replace them. Captain Houghton selected positions for two sections, one firing from a cellar window near the west bridge and one screened by heavy foliage in the park. Since none of his present positions could be abandoned, one gun was taken from each of his three sections east of the bridge and the fourth from the company reserve. Their final protective lines crossed in the plaza, blocking the German approach to the bridge.

With the fall of the château in the late afternoon a general engagement developed along the entire front north of the river extending from the foot of the bluff to the eastern outskirts of the city. Barricades of furniture and overturned carts had been thrown up in the streets from behind which the French fought desperately with grenades and bayonets, but despite this gallant defense, the battle line was forced back and by 10:00 A.M. stood at the plaza, in sight of the west bridge.

The French withdrawal starting at first with organized detachments, rapidly degenerated into an out-and-out flight. Individual soldiers broke away from the line of barricades and raced across the bridge. The hand-to-hand mêlée reached the river bank and surged upon the bridge itself. A German barrage falling upon the houses lining the south bank added to the indescribable confusion. Those squads of Company A that were not sheltered in buildings suffered many casualties in this fire.

Here was the crisis! In another moment the enemy would plunge through the streets of the island, outflanking, surrounding and overcoming the scattered machine-gun squads whose fire was masked by the retreating riflemen. But suddenly there was a tremendous roar. The heavy stonework of the bridge crumbled. The bridge itself was obscured by an enormous cloud of dust while fragments of French and German soldiers hurtled through the air. When the startled spectators on both sides could again see clearly, they saw that one span of the bridge had been completely destroyed and that a fifty-foot gap of deep water separated the opposing forces. General Marchand's mine, planted for just such an emergency, had proved decisive.

Masked as they were by French riflemen, the guns of Company A had not been able to fire. But with the explosion as their signal, they now opened on the Germans still massed in the square north of the river. Confusion and death swept the German ranks as six American machine guns blasted their dense formations at short range. Here was their second surprise in one day, probably even more sanguinary than that of the morning.

Despite their losses, the Germans massed twice more in the plaza. Apparently their higher commanders did

not realize that the bridge was gone, or perhaps believed that it could still be crossed on the wreckage. Each time, by the light of flares and burning buildings, they were dispersed with great losses.

Let us now return to Lieutenant Bissell. When the fall of the château gave the German machine-gunners command of the city the commander of the detachment north of the Marne reported his situation as hopeless and twice requested permission to withdraw. Receiving no reply, he started a withdrawal at 7:30 P.M. on his own initiative. Lieutenant Bissell, with both his machine guns at the tower (C), covered the withdrawal, with the assistance of some twenty Senegalese riflemen.

These Senegalese, recruited in the French Congo and speaking an unintelligible patois, were little more than savages and had earned a reputation for ruthless cruelty. They were an uncomfortable crew to have around, for one was never sure just what they intended to do. At times they seemed to have real difficulty distinguishing between Germans and Americans, and the latter had an uneasy feeling that a few honest mistakes would not lie heavily on the Senegalese conscience. Thus their value at any particular moment was one of those things on which you pay your money and take your choice.

At 9:00 P.M. the general withdrawal started. Keeping close to the bluffs, Bissell withdrew each gun separately, going himself with the last gun. On approaching the west bridge he observed the great confusion in the square. Wounded French soldiers were everywhere. Rifle fire was continuous. A machine gun suddenly enfiladed the street, where he and most of his platoon had taken refuge, prior to crossing. Then, to cap the climax, he saw the bridge, which he had expected to cross, blown into the air!

Hugging the walls of the houses, both French and Americans now worked their way through the streets toward the east bridge. A French officer suggested that, before attempting to cross this bridge, they warn the Americans south of the river not to fire. With a runner, Bissell went to the bridge and called. He was answered by a burst of fire from the guns of Company B. Then a German machine gun to his right rear also opened fire, wounding several of the party.

Cut off by friendly fire and with the enemy closing in, the only apparent avenue of escape lay in swimming the narrow river at this point. However, the Marne was so swift that a swimmer would be carried west to the center of the conflict. Accordingly, Bissell continued his efforts to establish his identity, by shouting his own name and the names of the other company officers. At last he received a reply and, in due course, brought his party across the bridge.

The Germans, however, were right on the heels of the retreating Americans, and, before the guns of Company B could again bring fire to bear, they had lodged themselves along the river bank under the protection of some railroad fills. Without rifle support, the position was critical.

As usual, the telephone was out and runners sent to the battalion command post had failed to return. Perhaps the rest of the battalion had been forced to withdraw, in which case my company (Company B) was supposed to cover them. I therefore sent oral messages to my platoon commanders by runner. The message to the 3d platoon directed it to move to the previously selected position south of Etampes where it could still cover the right flank. The orders to the 1st and 2d platoons were to hold their present positions to limit the movements of the Germans now south of the Marne. They would also cover the bridge to prevent more from crossing.

Since it was only 500 yards to the battalion command post, I decided to go myself and verify the situation. Arriving at headquarters I found there had been no change in the battalion dispositions. There was much concern, however, over the serious threat against the east bridge. Accordingly, I was ordered to clear the Germans from the south bank in my sector, and for this purpose was given the battalion reserve of four gun-squads improvised from battalion and headquarters personnel.

On approaching the cleared area in the vicinity of the east bridge, Germans, recognized by their helmets, could be seen between the Crezancy road and the river. This area, roughly 200 yards square and free from buildings, consisted largely of a depression crossed diagonally by a railroad fill (Figure 1, Company B sector). This fill divided it into two parts, the southern part being a cultivated sunken garden. The area was bound on the north by the river and on the south by the Crezancy road. The refinery buildings loomed to the east; to the west stood a large residence, surrounded by a high masonry wall. The 1st platoon had covered this area from positions just south of the Crezancy road and the 2d platoon had covered it from the refinery on the east.

Although German infantry was massing here, Company B's guns were strangely silent. Something appeared to be wrong. Leaving my reserve platoon with one gun mounted to fire eastward along the Crezancy road and another to enfilade the east bridge, I hurried to the 1st platoon position. There was no trace of the platoon! Had the Germans moved south, overcome them and penetrated into the heart of my sector? Scarcely twenty minutes had elapsed since I left. If this were the case, there should be some sound of fighting to the south, but no sound came from that direction.

How about the 2d platoon? Had it also vanished? It was some distance to the refinery. Possibly the way had been blocked by the enemy. In any event, nothing could be accomplished by going there alone. For the time being, my reserve guns limited the movement of the Germans, but should our real situation become known the result might be disastrous. I returned to my platoon, assembled my section leaders, a corporal and a private, and explained my plan.

Those guns now in position would fire only in case the Germans moved south or west of the open ground in force. In any case, all guns would carefully avoid firing

toward the refinery. Where necessary, individual Germans would be dealt with by pistols or captured. I would lead the other guns to the refinery, crossing the Crezancy road near the railroad crossing. The Germans in the northern depression could be taken by fire from the refinery. Fire from the refinery would be the signal for the other guns to open on suitable targets in order to destroy the Germans or drive them back across the bridge.

Preceded at 100 yards by a three-man point, I then led the men out in single file, protected from view by a fence that followed the Crezancy road. Cautiously we approached the refinery. Upon our arrival my worst fear was realized. All was quiet: the 2d platoon had also disappeared. However, we found no Germans in the refinery, which indicated that they were still ignorant of the true state of affairs. We quickly mounted our guns under the long sheds and opened on the Germans who could now be seen crouching in the northern depression. Our other guns immediately took up the fire. Unfortunately a line of retreat, hitherto overlooked, still lay open and over this those of the enemy who had escaped our first bursts of fire raced back across the stream. Thereupon all guns were shifted to cover the northern approaches to the bridge and the river bank. At daylight the remainder of Company B was reëstablished in its former positions.

It had been a tight squeeze. Had the enemy been aware of our true situation, the result of the engagement might have been reversed in less than a half hour. For our part we thanked God that the "fog of war" was thick. Subsequent inquiry revealed the fact that in the confusion of battle my runners had delivered my oral messages to all three positions as "Withdraw at once." More through luck than anything else, no harm was done but the value of telephones, or, in their absence, *the necessity for written messages* was brought home in an unforgettable lesson. In critical situations, when men are under terrific nervous and physical strain, oral messages are utterly unreliable. They are only justified as a last resort.

With one bridge destroyed and troops on either side of the river somewhat demoralized by the night's fighting, both forces rested quietly on their arms during the day of June 2. At 10:00 P.M. a new attempt was made to cross the east bridge, but this was promptly discovered and promptly checked by an intense fire from the guns of both companies.

On June 3 increased enemy activity became evident in the eastern outskirts of the city. Newly placed machine guns enfiladed additional streets south of the river and forced several of our guns to shift position. In general, those shifts were made by moving from one building to another, and the guns continued to cover the same sectors. *In all cases the guns were kept well back from the windows to prevent their discovery.*

During this day a platoon of Senegalese troops gave a striking example of sniping. Standing behind trees, they fired on the enemy at distances around 800 yards, steadying their long French rifles against the tree trunks. Sometimes they would select a point on a road where men passed frequently. Seeing a German vanish behind some brush they would aim at the point of his reappearance and fire as he emerged. They seldom failed to get their man.

During the afternoon of June 3 we received orders for relief. Meanwhile the threat against the east bridge became more menacing. Therefore, at dusk, under the protection of our machine guns, French engineers placed charges against the abutments at the water's edge, to be fired in case of attack.

German fire and American retaliation increased steadily during the evening. Most of it was ineffective—a mere waste of good ammunition. By 11:00 P.M. the air-cooled Hotchkiss machine guns of Company B's 2d platoon were cherry red and had to be replaced by cool ones from the company reserve. The relief, late in arriving, was barely completed by dawn. There had been no let-down in the fireworks and some guns, too hot to dismount, were left behind, others from the relieving company being exchanged for them.

Finally in Liberty three-ton trucks instead of Fords, the battalion rumbled past the southern edge of the city, made a dash down the dangerous Rue Carnot, and in short order reached the woods near Nesles. Just as we entered the woods we heard a dull detonation to the north. The east bridge had been destroyed. The Marne was barred!

In conclusion it might be well to review briefly the lessons which can be learned from this brief engagement. In the first place, without the discipline and indoctrination in an ideal, acquired through their years of service in the Regular Army, the 7th Machine-gun Battalion might never have reached the Marne in time to be effective. The value of such discipline, together with methods for developing it quickly, should not be discounted in our efforts to acquire other techniques.

From the standpoint of motorization we see the necessity for trained personnel. Self-contained units for emergency repairs and well-distributed fuel bases, or tank trucks capable of keeping up with the column, are also essential. Motorcycles for reconnaissance of routes, control of the column and quick mechanical relief to disabled trucks proved their worth. Simple, schematic road maps, copied from the more elaborate maps of unit commanders, should be given to each driver. If time does not permit this, an itinerary of the route is mandatory.

Surprise, the great machine-gun asset, proved its effectiveness in two striking instances. The need of protection for gun-crews and of providing ample alternate positions was clearly shown.

The importance of good communications, preferably by telephone but in any case by written rather than oral messages, was perhaps the outstanding lesson. In this regard the selection of runners familiar with the language of one's allies, is highly desirable.

Are Your Harbor Defense Coordinates Up To Date?

By Lieutenant Colonel H. H. Acheson, C.A.C. and Major D. W. Hickey, Jr., C.A.C.

According to Army Regulations on Maps and Mapping, A.R. 100-15, the entire United States is divided into zones for placing standard grid coördinates upon military maps. Some harbor defenses have gone in for the new type of coördinates in addition to the old faithful local plane coördinates. This is as it should be. While there is more work in placing the standard grid on the map of the local harbor defenses than there was in working with the local plane coördinates, once the newer system is in use, it will be found to be much more flexible and have far-reaching possibilities.

Suppose that in a harbor defense there are two or three forts, separated by from fifteen to thirty miles. If local plane coördinates are in use in that harbor defense, the probabilities are that each fort has its own local system, made up at a time when there was no need for the separate forts to be tied in with each other; nor is it possible to tie them in if each post has an independent system.

Suppose again that corps artillery or GHQ reserve artillery is assigned the mission of working in conjunction with the harbor defenses. The Corps maps will show the standard grids, but the harbor defense probably will be based on a different point of origin. If the Artillery Engineer should be called upon to furnish maps or the coördinates of points to be used in orientation he will have to admit that he does not "speak the language."

There are some cases in which standard grid coördinates are not as convenient for fire control purposes as local plane coördinates. Such a case will be discussed later. Even if the use of local plane coördinates is continued for fire control, it is necessary for the Artillery Engineer to be prepared to furnish data in regard to points in the harbor defenses in terms of standard grid coördinates for the information of other troops engaged in frontier defense.

Local plane coördinates may be converted to standard grid coördinates by a simple formula. (See page 26 of Special Publication No. 59, Coast and Geodetic Survey, 1919, procurable from the Superintendent of Documents, for 25 cents.) By constructing a simple form, using natural functions, and with a Monroe or other good calculator, the local plane coördinates of every station in a harbor defense can be converted to standard grid coördinates in a short time. There is only one thing that must be checked before starting the conversion: be certain that the latitude and longitude of the origin of local plane coördinates are up to date. If not possible to determine positively the correctness of the coördinates of the origin, it is obvious that any conversion from local plane to standard grid will carry with it the error. A method for making this check will be explained later.

Have you ever tried to shoot in a station by resection, using three prominent landmarks, whose coördinates are known? Have you ever tried to check your results by shooting in the same station by resection from three other equally prominent landmarks? If you have had average luck, you will not check closer than 10 yards. Your angles may have been measured with great precision; you may have used seven-place logarithms, and have had your work checked by other officers, and yet be unable to get a check. The answer lies not in your field work, nor in your work with the tables, but in the basic data from which you started. The six prominent points you used may be at fault. Prominent points on the terrain have been shot in at different times over a period of years. For example, Lighthouse "A" may have been shot in and its geographic position determined in 1898, and that data recorded in the Artillery Engineer's office with great care. Lighthouse "B" may have been located in 1903. Chimney No. 1 may have been carefully plotted in 1919, and so on. Each point was surveyed with care, and at the time the calculation was correct. But, latitudes change during a 425-day cycle by as much as 0.720 seconds, and at latitude 40° North, this much error in the position of a primary station will make as much as 24 yards error in the Y coördinates of that point.

With several primary points, shot in at different times, and not adjusted to some common plane, consistent results cannot be obtained. Recently the Coast and Geodetic Survey has made such an adjustment, bringing a large number of primary points to what is termed the "North American Datum-1927." This tabulation will be furnished by the Director, U. S. Coast and Geodetic Survey, Washington, D. C., and should give any harbor defense in the United States an abundance of primary points, all adjusted to the "North American Datum-1927," from which the standard grid coördinates of every station in the harbor defense can be accurately determined. For example, there are more than 40 U.S.C.&G.S. primary points visible from the posts in the Harbor Defenses of Chesapeake Bay, including several points on the reservation, for which the adjusted geographic coördinates are given to the thousandth part of a second of arc.

Using any three of these points, it is now possible to shoot in a station by resection, and get a check within about one yard by another resection using any other three points. Best results have been obtained by using what may be termed multiple resection. Select four or more points,

at least one in each quadrant if possible, and measure by repetition the angles between adjacent points. Adjust these angles to a total of 360 degrees. Then work the resection problem as many times as there were points selected, using each point in turn as the middle point of three. Of course, at least four points are necessary or we find ourselves solving the same problem three times without resulting benefit. Results should fall within two square yards on the ground. The average result should be within one yard of the perfect solution. This accuracy is sufficient for artillery purposes. Here again, the use of a simple form, tables of natural functions to six places if possible, and a good calculating machine will make the solution of the problem simple and rapid. Resection is favored over traversing from point to point, because each station is then free from any error of previous stations. However, a traverse from a well established point to the point being located is an excellent check on the resection.

It has been assumed that the reader is familiar with the standard grid system for military maps. This is discussed in paragraphs 14 and 15, Training Manual No. 2160-25, Orientation. In this system the geographic origin is assigned arbitrarily the value of X = 1,000,000.0 yards and Y = 2,000,000.0 yards. The geographic origins of the zones are all at 40° 30′ North Latitude, and are on the central meridians of the zones, i.e., 73° West Longitude for zone "A," 81° West Longitude for zone "B," and so on across the country. For the zones embracing our tropical stations, the origins are at 40° 30′ North Latitude in each case, and Longitudes 81° West for Panama, 158° West for Hawaii, and 122° East for the Philippines. Since most of our tropical stations are more than 2,000,000 yards south of the origin of coördinates, the Y coördinate of the origin is then considered to be 5,000,000.0 yards, in order to avoid negative values of Y coördinates in tropical areas.

There are two methods given in Special Publication No. 59 for converting geographic coördinates to standard grid coördinates. The first method is simply an interpolation between coördinates given in the book for each five-minute intersection of latitude and longitude. The second and more accurate method, and the one deemed best for converting geographic positions of primary points to standard grid coördinates, is given on page 25 of the same publication. In this formula it is necessary to start with the latitude; the difference in longitude from the central meridian of the zone; the equatorial radius of the earth according to Clarke, or 6,975,277 yards; and the eccentricity squared or $e^2 = .00676866$.

The two formulae given in the publication may well be expressed as follows:

$$X' = \frac{6{,}975{,}277 \cot \phi}{(1 - .00676866 \sin^2 \phi)} \; \tfrac{1}{2} \cdot \sin (d\lambda \sin \phi)$$

$$Y' = \frac{6{,}975{,}277 \cot \phi}{(1 - .00676866 \sin^2 \phi)} \; \tfrac{1}{2} \cdot 2 \sin^2 \frac{(d\lambda \sin \phi)}{2}$$

Where X′ is the distance in yards of the point P, grid-east or grid-west of the central meridian.

Where ϕ is the latitude of the point P, whose standard grid coördinates are desired, and whose latitude and longitude are expressed in degrees, minutes, and seconds.

Where $d\lambda$ is the difference in longitude between the point P and the central meridian of the zone in which "P" falls.

Where Y′ is the distance in yards of the point P, grid-north of the intersection of the central meridian of the zone and the parallel of latitude passing through P.

Where the other values are constants.

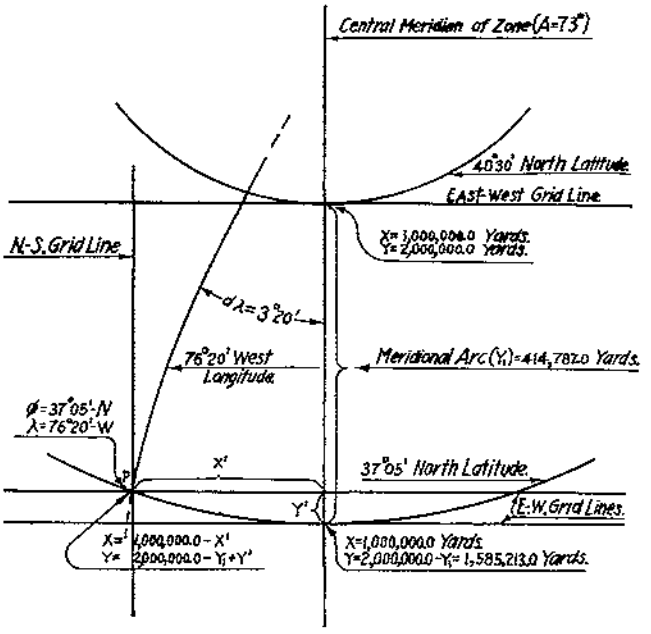

Then X=1,000,000.0+X′, that is, the X coördinate of the point "P" then becomes 1,000,000.0 plus the distance grid-east (or minus the distance grid-west) of the central meridian.

To find the Y coördinate of "P" we need the length of the arc of the central meridian between the origin at 40° 30′ North Latitude and the latitude of "P". This is represented by Y_1. Then

$Y = 2{,}000{,}000.0 + Y_1 + Y'$.

Meridional arcs, of values of Y_1 are best obtained from Special Publication No. 5, U. S. Coast and Geodetic Survey. (This publication, entitled "Tables for a Polyconic Projection of Maps and Lengths or Terrestrial Arcs of Meridians and Parallels," may be obtained from the Superintendent of Documents, for 20 cents.) Under the section termed "terrestrial arcs" will be found tables showing the continuous sums of minutes of arc, expressed in *meters*, from parallel to parallel, measured along the central meridian. It will be found that the meridional arc from 40° 30′ North Latitude to 37° 05′ North Latitude, for example is,

From 40° 30′	to 40°	55,518.8 meters
40°	to 39°	111,023.0 meters
39°	to 38°	111,003.7 meters
38°	to 37° 05′	101,736.5 meters
		379,282.0 meters, ×1.0936111 = 414,787.0 yards.

This may be checked by first determining the Y coördinate of any central meridian at 37° 05′ North Latitude, Y=2,000,000.0 minus 414,787.0=1,585,213.0 yards. Then check in Special Publication No. 59, U. S. Coast and Geodetic Survey. See page 122, column headed "37° 05′" and "y," and running down the column to the last figure on the page, we find opposite 73° Longitude and 37° 05′ Latitude a value of 1,585,214.0 yards. A discrepancy of approximately one yard exists between the results obtained by finding the meridional arc and subtracting this value from 2,000,000.0 and the results obtained from the tables in Special Publication No. 59. For this reason, it is believed best to use the formula method of obtaining the coördinates of the primary points.

It will be necessary to interpolate in most cases to obtain the meridional arcs. This is straight line interpolation between the meridional arcs of one minute difference, and should be done with great care. It will be found best to check results by interpolating upward from the lower value, and then downward from the upper value, carrying the differences far enough to get agreement to tenths of a yard.

Certainly, if standard grid coördinates of primary points are obtained by the formula given above, they will be more accurate than coördinates obtained by interpolation in the tables, and of sufficient accuracy to assure that succeeding work will be consistent.

There is only one other caution to give. Remember that local plane coördinates are normally used close to the meridian of the origin and that there is very little distortion resulting from considering the local area a plane. There is, therefore, very little distortion or difference between ground distances and map distances where local plane coördinates are used. This fact makes it somewhat easier to use local plane coördinates than the kind of coordinates advocated in this discussion. In the case of the standard grid coördinates there may be several degrees of longitude between our position and the central meridian of the zone. Distortion appears in the North-South vector of any line when using standard grid coördinates. This distortion decreases with increasing latitude, but increases with the longitudinal difference between the point under discussion and the central meridian of the zone. It actually ranges from zero to all positions on the central meridian to 2.574 yards per thousand yards in the North-South direction at 24° Latitude at the edge of the zone. In other words, 1000 yards on the ground in a North-South direction, when placed on the map, or where coordinates are being determined, must be stretched by this distortion, or by the "Magnification of Scale Correction." Likewise, in taking coördinates from the map to obtain ground distances or azimuths, the delta Y, or the North-South vector of the line must be shrunk by the same correction. This correction may seem small, but it is important in the orientation of a seascoast battery, and its neglect will cause errors of considerable magnitude to appear in the final result. The correction for "Magnification of Scale" is given in tabular form on page 123 of the Orientation Manual, T.M. 2160-25, and on page 31 of Special Publication No. 59, U. S. C. & G. S.

The above discussion has stressed standard grid coordinates for harbor defenses. These coördinates are equally applicable to the country at large, also to the tropics. It is only necessary to have as a starting point, either one or more prominent points whose geographic positions are known, such as water tanks, church towers, chimneys, or one or more triangulation stations established by the U. S. Coast and Geodetic Survey or by the U. S. Geological Survey. Mobile regiments will find that future maps furnished them will be marked with standard grid coördinates.

After the standard grid coördinates have been obtained for all datum points, fire control stations, battery directing points, and other points for which it is desirable to have coördinates, the job of the Artillery Engineer will have been completed. The harbor defense will then be in a position to speak the same language as the mobile army and the neighboring harbor defense.

The next thought will naturally be a desire to re-orient all guns, depression position finders, azimuth instruments, searchlights and 110° plotting boards from their present local grid south to grid north. It should be remembered that in local grid systems, the orientation is not on true south through the guns, but rather on a south line that is parallel to true south thru the origin of local coördinates. This will be a major operation, and one that should receive the immediate attention of the Coast Artillery Corps. It will cost a considerable sum of money to make the mechanical changes necessary to swing the harbor defenses around from true south to grid north, but in the interest of modernization it should be done. This work will fall naturally into three steps, the first of which has been discussed in this paper. The second step is the determination of the amount of change necessary, and the third step will be the job of the Ordnance Officer in making the mechanical changes.

In order to solve step two a short discussion of grid divergence is necessary. Remember that all meridians point to true north and true south, and that only at the central meridian of a zone do grid north and south coincide with a meridian. Therefore, all other meridians than the central meridian in a zone converge towards the central meridian. In the northern hemisphere this convergence increases towards the north. Grid north is true north at the central meridian, but as we go westward, grid north remaining parallel to the central meridian, points by an increasing amount to the west of true north. This difference is termed "grid divergence." In the same manner, as we go eastward from the central meridian, grid north points by an increasing amount to the east of true north. The grid divergence is a function of the latitude and the difference in longitude between the point in question and the central meridian. The relation may be expressed by:

Grid divergence (in seconds of arc) = sine of latitude x difference of longitude from central meridian in seconds of arc.

The grid divergence for the point "P" discussed above then is,—

Sine 37° 05′ x 12000 = 7236 seconds = 2° 00′ 36″.

The same information may be obtained from table "L" of T.M. 2160-25, Orientation.

This means that grid north lies 2° 00′ 36″ west of true north for the harbor defenses of "P." Had "P" been a like amount east of the central meridian of the zone and at the same latitude, the divergence would have been eastward by the same amount. A harbor defense gun at P, which now points to true south with the azimuth circle reading zero, must now be traversed to the right by 180° — 2° 00′ 36″ = 177° 59′ 24″, and the azimuth circle made to read zero. We now have the gun oriented to standard grid north. Similar treatment must be given each piece of equipment having a fixed azimuth circle, in the harbor defense.

Step three consists merely of the mechanical changes necessary to accomplish the swing discussed in the preceding paragraph. Such a change obviously cannot be made without authority from the War Department. It might be possible to re-orient the azimuth instruments, determine firing data in the standard grid system, and then apply a correction corresponding to the grid divergence before sending the firing data to the guns. An additional correction, with its possibility of error, will not appeal to a practical artilleryman. The reader may ask, "Why not fire from grid south, instead of from grid north, thereby saving a large shift in the azimuth circle?" If the grid divergence is small enough in a certain harbor defense, the shift to grid south can probably be made by shifting indices instead of the more costly operation of shifting the azimuth circle. This would eliminate the correction referred to above, and make it unnecessary for the Artillery Engineer to maintain two systems of coördinates. Each case would have to be analyzed separately to determine if the necessary shift could be made in the indices. If the harbor defense happened to fall close to the central meridian and at a favorable latitude the grid divergence would be small. An examination of the geographic positions of our harbor defenses shows that practically all are so placed in their zones that the grid divergence would be considerable.

It is the opinion of the authors that no compromise should be made. The common azimuth origin for Coast Artillery should be grid north. We can then exchange information with mobile elements of Coast Artillery and with other elements of the Army. In any event, if fixed guns continue to use local plane coördinates, all Coast Artillery officers should understand the standard system, and the data necessary for liaison with mobile troops should be available in every harbor defense.

An Old Method in a New Guise

By Lieutenant Bohdan Mankowski, *Polish Navy*
as told to
Lieutenant Burgo D. Gill, C.A.C.

Is it possible to devise a system that will obviate the necessity of using the plotting board and numerous gadgets; eliminate some of the lines of communication, and reduce the number of men in the plotting section of a seacoast battery? Can a fairly inexpensive, small, rugged machine, easy to operate with two or three men, be constructed? The authors believe that it can be done. The machine must be suitable for use by either medium or large caliber batteries, and be adaptable to either land or aerial observation. For lack of a better name we will call this machine a "computer." For obvious and cogent reasons the mechanical construction of the instrument will not be discussed. The principles involved are the same as those used by some navies in their fire control systems. In fact, this idea is the result of comparing naval and seacoast methods, especially some of the schemes devised to fire a seacoast battery using aerial observation.

The initial data needed to open fire is the approximate range, and the course and speed of the target with reference to the gun-target line. In this case the course does not mean a true azimuth course, but the angle (called the angle of inclination) that the course makes with the gun-target line. When a ship is coming in, this angle is zero degrees, 90° when broadside, and 180° when going directly away from the battery.

If we know the angle of inclination and the speed of the target, we can easily determine the range and deflection rates of change components. Assuming that we know the range and azimuth of a target, and that it is proceeding on a straight course at a constant rate of speed, if we can get the change the target makes in both range

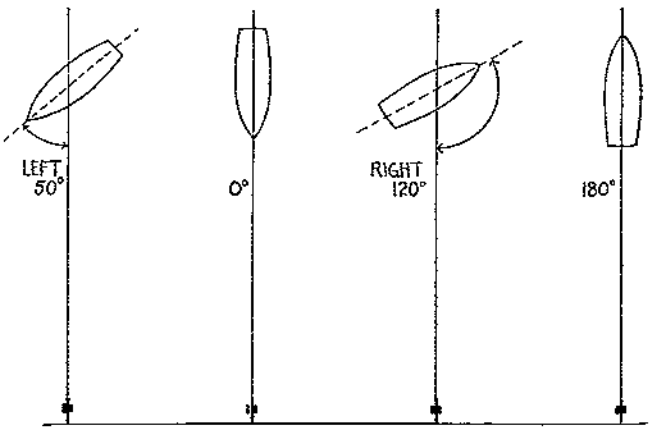

Figure 1—Angle of Inclination

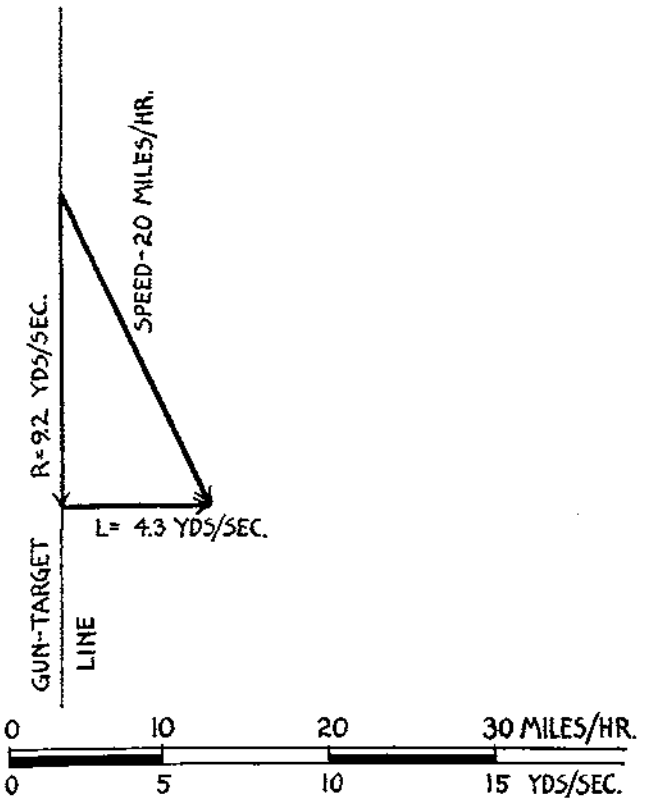

Figure 2—Deviation and value of R and L.

and deflection during a given interval, the firing data for any future point can be determined easily. Of course, as with any other method of fire control, the initial point with its corresponding firing data is only approximate, but for the purpose of this discussion it is necessary to assume that we know the correct range and azimuth. Methods of fire adjustment with the computer will be discussed later.

We will call the range component "R" and the deflection component "L." "R" is positive when range increases, and "L" is positive when the target is traveling to the right.

Inasmuch as the computer furnishes us continuous ranges, or the range for any "instant," we can eliminate all time-interval systems. It is not forgotten that ballistic and arbitrary corrections have to be considered as well as time of flight. These factors will be discussed later.

Description of Computer

A pair of the computers, one for range and one for deflection, must be used with each battery. Figure 3 shows the face of the range computer; essentially this consists of four parts:

Consider first the angle of presentation and speed dial. Knowing these factors, the operator sets the angle and the speed. This instrument computes "R" as soon as these data ate set. "R" is then transmitted mechanically to the tachometer. This instrument is graduated in yards per second. It has a dial which remains at zero when the operating handle is not in motion. An indicator moves around the outside of the graduations of this dial, which is set to the value of "R" as computed from the first instrument. To set the tachometer in motion, the operator turns the crank at the correct speed so that the actuated needle always matches the "R" indicator. "R" is now being "ground out."

The tachometer is connected to the range dial upon which is set the initial range. Once the initial data has been set on the computer, "R" is constantly being added to, or subtracted from, the initial range by the process of matching pointers. The range at any instant can be read from the instrument.

Above the range dial is a correction dial. At any instant the Battery Commander or "range" officer can set off corrections. This in turn is added to, or subtracted from, the range dials readings and new corrected ranges are turned out.

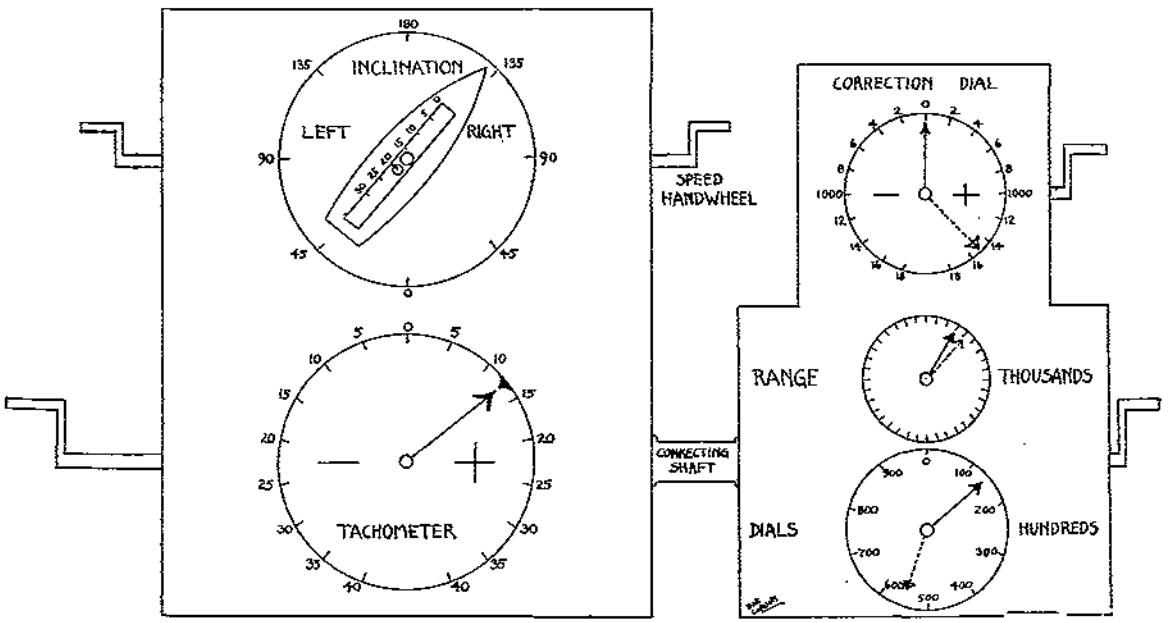

Figure 3—Computor

The grid divergence for the point "P" discussed above then is,—

Sine 37° 05′ x 12000 = 7236 seconds = 2° 00′ 36″.

The same information may be obtained from table "L" of T.M. 2160-25, Orientation.

This means that grid north lies 2° 00′ 36″ west of true north for the harbor defenses of "P." Had "P" been a like amount east of the central meridian of the zone and at the same latitude, the divergence would have been eastward by the same amount. A harbor defense gun at P, which now points to true south with the azimuth circle reading zero, must now be traversed to the right by 180° — 2° 00′ 36″ = 177° 59′ 24″, and the azimuth circle made to read zero. We now have the gun oriented to standard grid north. Similar treatment must be given each piece of equipment having a fixed azimuth circle, in the harbor defense.

Step three consists merely of the mechanical changes necessary to accomplish the swing discussed in the preceding paragraph. Such a change obviously cannot be made without authority from the War Department. It might be possible to re-orient the azimuth instruments, determine firing data in the standard grid system, and then apply a correction corresponding to the grid divergence before sending the firing data to the guns. An additional correction, with its possibility of error, will not appeal to a practical artilleryman. The reader may ask, "Why not fire from grid south, instead of from grid north, thereby saving a large shift in the azimuth circle?" If the grid divergence is small enough in a certain harbor defense, the shift to grid south can probably be made by shifting indices instead of the more costly operation of shifting the azimuth circle. This would eliminate the correction referred to above, and make it unnecessary for the Artillery Engineer to maintain two systems of coördinates. Each case would have to be analyzed separately to determine if the necessary shift could be made in the indices. If the harbor defense happened to fall close to the central meridian and at a favorable latitude the grid divergence would be small. An examination of the geographic positions of our harbor defenses shows that practically all are so placed in their zones that the grid divergence would be considerable.

It is the opinion of the authors that no compromise should be made. The common azimuth origin for Coast Artillery should be grid north. We can then exchange information with mobile elements of Coast Artillery and with other elements of the Army. In any event, if fixed guns continue to use local plane coördinates, all Coast Artillery officers should understand the standard system, and the data necessary for liaison with mobile troops should be available in every harbor defense.

An Old Method in a New Guise

By Lieutenant Bohdan Mankowski, *Polish Navy*
as told to
Lieutenant Burgo D. Gill, C.A.C.

Is it possible to devise a system that will obviate the necessity of using the plotting board and numerous gadgets; eliminate some of the lines of communication, and reduce the number of men in the plotting section of a seacoast battery? Can a fairly inexpensive, small, rugged machine, easy to operate with two or three men, be constructed? The authors believe that it can be done. The machine must be suitable for use by either medium or large caliber batteries, and be adaptable to either land or aerial observation. For lack of a better name we will call this machine a "computer." For obvious and cogent reasons the mechanical construction of the instrument will not be discussed. The principles involved are the same as those used by some navies in their fire control systems. In fact, this idea is the result of comparing naval and seacoast methods, especially some of the schemes devised to fire a seacoast battery using aerial observation.

The initial data needed to open fire is the approximate range, and the course and speed of the target with reference to the gun-target line. In this case the course does not mean a true azimuth course, but the angle (called the angle of inclination) that the course makes with the gun-target line. When a ship is coming in, this angle is zero degrees, 90° when broadside, and 180° when going directly away from the battery.

If we know the angle of inclination and the speed of the target, we can easily determine the range and deflection rates of change components. Assuming that we know the range and azimuth of a target, and that it is proceeding on a straight course at a constant rate of speed, if we can get the change the target makes in both range

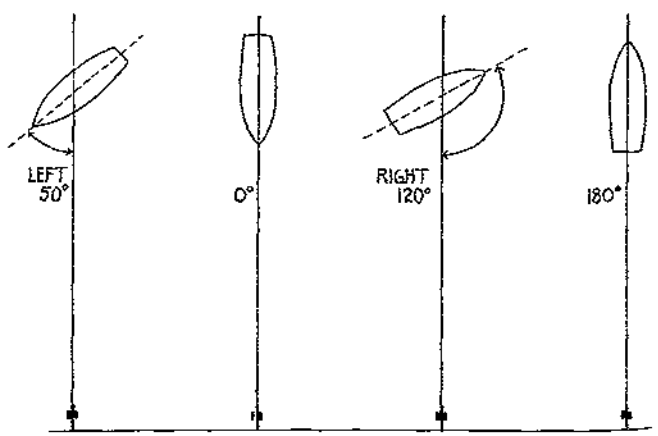

Figure 1—Angle of Inclination

Fire Control With the Computer

First, set off initial range, angle of presentation, and speed. The operator matches his tachometer needle and indicator. Ranges can be obtained at once. Fire a salvo and note deviation. Fire a second salvo, remembering that the range and deflection depend on "R" and "L." If the centers of impact of the two salvos show a fairly constant deviation the "R" and "L" have been determined correctly, or more properly speaking, the angle of presentation and speed have been correctly determined.

If the two salvos in the above situation differ in their centers of impact, the initial "R" is wrong.

When the deviations of the successive salvos are "over" and continually increase "R" is too large. Conversely, if the shots are "short" by increasing amounts, "R" is too small.

It must not be overlooked that a computer is needed for deflection as well as for range. The authors consider it advisable to have two small computers, rather than a larger and more cumbersome unit containing both features.

C. I. of Salvos	*If R is too small*	*If R is too large*
OVER	Deviations *decrease* in absolute value.	Deviations *increase* in absolute value.
SHORT	Deviations *increase* in absolute value.	Deviations *decrease* in absolute value.

In using this computer, it is first necessary to get a smooth "R" before range corrections are applied. If the first salvo falls a considerable distance from the target, a flat range correction is applied.

So far, we have only considered correcting "R" to get parallel lines between actual range of target and instrument range. The difference between these two lines is the ballistic correction which may be considered constant for the short duration of fire. This statement is likely to arouse a controversy, the old, old story of applying flat corrections or by percentages. However, this article is written mainly to present the proposed computer in general and brief terms.

While we have been talking about getting a correct "R," nothing has been said as to how we get this "R" on the machine. Do we vary it by changing the speed, or the angle of presentation? It must be remembered that "R" is a function of both. What do we do if our sensings tell us the "R" is erroneous?

If the angle of presentation is 45° with the gun-target line, "R" is affected equally by either speed or angle change. If the angle of presentation is zero, speed alone determines "R." Therefore, in order to correct "R," the adjusting officer must take into consideration the quadrant of the course in order to apply a proper correction (see Figure 4).

Dead Time and Time of Flight

The computer is intended to be used without a time-interval system. Such being the case, the initial dead time must be taken into consideration as well as the time of flight. This range correction can be read quickly from a chart constructed by the formula:

Correction = "R" (Time of flight + dead time) (Figure 5).

Time of flight is taken from a range table, while any battery commander after a few periods of drill can determine the average dead time of his battery. A chart such as shown can easily be calculated.

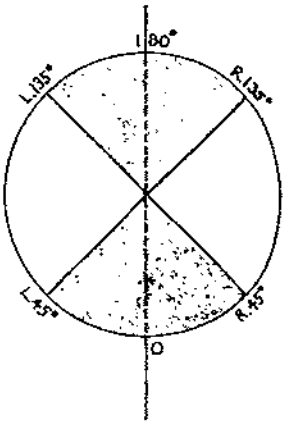

Figure 4—Effect of Speed and Inclination upon R.

Conclusion

When this computer is compared with terrestrial spotting, it is easy to question the advisability of its use. However, the more one studies the problem of aerial observation, noting the different systems employed, the closer one sees the connection between this old navy method of firing (as exemplified by this computer) and the present trend of ideas on firing. What has this computer to offer? What are its expected disadvantages?

Advantages.
1. No time-interval system.
2. Uses less men than the old system.
3. Fewer lines of communication to maintain.
4. Simplicity.
5. Operates by man power.
6. Equally suitable for medium calibre and large guns employing either land or aerial observation.
7. No careful survey required to start shooting with a hastily emplaced battery.
8. Continues to predict if target is obscured.
9. Simplicity of design. No complicated plotting room required.

Disadvantages.
1. Uses more ammunition than old plotting board, horizontal base system, but *no more* than required by our present aerial firing methods.
2. Initial cost.

Perhaps we have been quite charitable with ourselves in picking out so many nice advantages, and then not having sufficient imagination to dig up more disadvantages. But, this article is written in an endeavor to cause us to think more about firing. Undoubtedly, our old horizontal base-line system of terrestrial observation for long-range firing does not meet all requirements. If such is the case, why not build up a system that can be used equally as well for all situations?

Initial Range Correction Table

Correction = R (Time of flight plus dead time.)
Battery dead time, 20 seconds, for an assumed battery.

Range \ R Yds/sec	5	280	15	20
2,000	115	10	345	460
4,000	140	340	420	570
6,000	170	230	510	680
8,000	200	400	610	810

Figure 5

Conversion Tables

Minutes and Seconds to Decimals and the Reverse

By First Lieutenant H. W. Conklin, 620th CA-Res.

PRACTICALLY all position-finding instruments in the harbor defenses throughout the United States are graduated in degrees and hundreths. These instruments are not accurate enough for the establishment of baselines and other orientation data; the transit, an instrument of great precision, is used for this work. But the transit is graduated in degrees and minutes; therefore the final result must be converted to decimals of degrees.

In checking the orientation of any harbor defense system the usual procedure is to start with the known coordinates of a station using the following formulae:

$$\frac{\text{Difference of X}}{\text{Difference of Y}} = \text{tangent of bearing.}$$

$$\frac{\text{Difference of X}}{\text{Sin of bearing}} = \frac{\text{Difference of Y}}{\text{Cos of Bearing}} = \text{Range.}$$

Since these formulae are computed by means of a log table the resulting angles will be in terms of degrees, minutes and seconds, there being no log tables at present in terms of decimals of degrees. The results of the computations must be converted to decimals.

This conversion is not a difficult problem, but when added to the other necessary work in checking the computations of a large harbor defense it means that many more computations must be made. The following tables have been prepared to save the extra work of converting angles from minutes and seconds to decimals, or from decimals to minutes and seconds. They will save much painstaking labor and greatly speed up the work.

CONVERSION TABLE — Minutes and Seconds to Decimals

	Minutes	Seconds		Minutes	Seconds		Minutes	Seconds
1	.0167	.0003	21	.3500	.0058	41	.6833	.0114
2	.0333	.0006	22	.3667	.0061	42	.7000	.0117
3	.0500	.0008	23	.3833	.0064	43	.7167	.0119
4	.0667	.0011	24	.4000	.0067	44	.7333	.0122
5	.0833	.0014	25	.4167	.0069	45	.7500	.0125
6	.1000	.0017	26	.4333	.0072	46	.7667	.0128
7	.1167	.0019	27	.4500	.0075	47	.7833	.0131
8	.1333	.0022	28	.4667	.0078	48	.8000	.0133
9	.1500	.0025	29	.4833	.0081	49	.8167	.0136
10	.1667	.0028	30	.5000	.0083	50	.8333	.0139
11	.1833	.0031	31	.5167	.0086	51	.8500	.0142
12	.2000	.0033	32	.5333	.0089	52	.8667	.0144
13	.2167	.0036	33	.5500	.0092	53	.8833	.0147
14	.2333	.0039	34	.5667	.0094	54	.9000	.0150
15	.2500	.0042	35	.5833	.0097	55	.9167	.0153
16	.2667	.0044	36	.6000	.0100	56	.9333	.0156
17	.2833	.0047	37	.6167	.0103	57	.9500	.0158
18	.3000	.0050	38	.6333	.0106	58	.9667	.0161
19	.3167	.0053	39	.6500	.0108	59	.9833	.0164
20	.3333	.0056	40	.6667	.0111	60	10000	.0167

To convert minutes and seconds to decimals, find decimal for the required minutes and seconds; add these two values to obtain the correct decimal.

Example: Convert 56′-38″ to decimals.
In column marked "Minutes" opposite 56 find .9333
In column marked "Seconds" opposite 38 find .0106

Sum .9439

56′-38″ equals .9439 degrees.

CONVERSION TABLE — Decimals to Minutes and Seconds

TABLE I

	0.0	0.1	0.2	0.3	0.4	0.5	0.6	0.7	0.8	0.9
.0	0	6′00″	12′00″	18′00″	24′00″	30′00″	36′00″	42′00″	48′00″	54′00″
.01	0′36″	6′36″	12′36″	18′36″	24′36″	30′36″	36′36″	42′36″	48′36″	54′36″
.02	1′12″	7′12″	13′12″	19′12″	25′12″	31′12″	37′12″	43′12″	49′12″	55′12″
.03	1′48″	7′48″	13′48″	19′48″	25′48″	31′48″	37′48″	43′48″	49′48″	55′48″
.04	2′24″	8′24″	14′24″	20′24″	26′24″	32′24″	38′24″	44′24″	50′24″	56′24″
.05	3′00″	9′00″	15′00″	21′00″	27′00″	33′00″	39′00″	45′00″	51′00″	57′00″
.06	3′36″	9′36″	15′36″	21′36″	27′36″	33′36″	39′36″	45′36″	51′36″	57′36″
.07	4′12″	10′12″	16′12″	22′12″	28′12″	34′12″	40′12″	46′12″	52′12″	58′12″
.08	4′48″	10′48″	16′48″	22′48″	28′48″	34′48″	40′48″	46′48″	52′48″	58′48″
.09	5′24″	11′24″	17′24″	23′24″	29′24″	35′24″	41′24″	47′24″	53′24″	59′24″
.10	6′00″	12′00″	18′00″	24′00″	30′00″	36′00″	42′00″	48′00″	54′00″	60′00″

TABLE II

	0.00
0	0
.001	0′ 3.6″
.002	7.2″
.003	10.8″
.004	14.4″
.005	18.0″
.006	21.6″
.007	25.2″
.008	28.8″
.009	32.4″
.010	36.0″

When the decimal contains two figures, find the equivalent minutes and seconds in TABLE I.
When the decimal contains three figures, find the equivalent minutes and seconds for the first two figures of the decimal in TABLE I. To this value add the equivalent seconds for the third figure of the decimal which is found in TABLE II.

Example: Convert .768° to minutes and seconds.
In Table I, for .76 45′ 36″
In Table II, for .008 .28.8″

.768 equals 46′ 04.8″

Spy and Counter-Spy—Part I

By Thomas M. Johnson

The problem was not so much to place agents where they could get valuable information as to devise means to get that information out in time to be useful.

THE A.E.F., like every army in American history, had spies and counter-spies, men, and occasionally women, who did their indispensable work with much drudgery and some adventure—but no publicity. Veterans who scoff: "Never heard of it!" should remember that a secret service is supposed to be *secret,* and the A.E.F. covered a lot of territory.

Few even heard the name of that branch which was not "secret service," but G-2-*B,* meaning Division B of G-2, the Intelligence Section of the General Staff, Chaumont. It functioned mostly under Lieutenant Colonels Aristides Moreno and Nicholas W. Campanole. G-2, Services of Supply, Tours, was concerned mainly with spy-hunting.

Under G-2-*B,* G.H.Q., and G-2, S.O.S., came all military intelligence work of a secret nature in the Zone of the Armies, most of such work in the rest of France and in Great Britain, and some of it in all European countries, Allied, neutral and enemy. But outside of France and Great Britain it was done very largely by the Military Intelligence Division of the General Staff, War Department, first under Major General R. H. Van Deman, then under Brigadier General Marlborough Churchill. Indeed, the far-flung tentacles of M.I.D. spread from Washington over the world.

That work was done rather well. Although spying is not supposed to be congenial to the American temperament, such diverse authorities as Sir Basil Thomson of Scotland Yard and von Hindenburg agree that we picked it up readily. Sir Basil thought that, at times, our intelligence service was better than the British; this is high praise, for those frank hearty Britons with whom we collaborated closely were past masters at the devious art. Certainly during the decisive final months of the War, G-2-*B* was doing valuable work.

That work was divided between espionage, which is spying, and counter-espionage, which is hunting the enemy's spies. Espionage involves not only spying upon the enemy, but gaining information about him or damaging his cause by secret means. It may include sabotage or propaganda. Nobody engaged in it wears a black slouch hat or long cloak or pink whiskers; your typical spy wants to be inconspicuous. He even calls himself an "agent." So, in civil life, he wears black shoes, blue serge ready-mades, and a derby hat. In the army, he wears O.D. or *field grey,* depending upon the background.

Right here, let this writer make plain that personally he had no connection during the War with spies, counter-spies or their work. He was not under G-2-*B,* but as accredited correspondent of the New York *Sun,* came under G-2-*D,* the Press and Censorship Division of the Intelligence Section, G.H.Q., A.E.F. He violates no obligation in passing on, after well nigh twenty years, some truths and some true stories of American secret service abroad, gleaned years afterward, largely from former participants.

Those in the game strove always to make secret service businesslike and efficient, but despite everything, its irrepressible romanticism would thrust through to the surface. What wonder, in a hastily assembled service of enthusiastic amateurs.

On April 6, 1917, the M.I.D. in Washington consisted of two officers (Major General R. H. Van Deman and Colonel A. B. Coxe) and one part-time clerk. In Europe we had a few attachés paying some of their own expenses. Actually, in the European sense of the word, we had no "agents." The task of building up the service fell to General Van Deman.

Picking spies and spy-hunters! How would one do it? Choose world travelers, cosmopolites, linguists, geographers, college professors, newspaper correspondents, explorers, international lawyers, detectives, traveling salesmen, radio men, code and cipher and secret ink men? In G-2 there is work for all kinds of men, save those who are too slow-witted or too timid to work on their own.

"To be a really good secret agent," according to an American who was one, "you must know the territory where you are to operate, its people, customs and language. But above all you need keen intelligence and iron self-control. You must have a strong motive: great love of your own country or hatred of the enemy, desire for adventure, or, perhaps, for money, but not enough to make you sell out to the enemy. It takes an honest man to be a good spy. He must hold his liquor and hold off his women. As Kipling says:* 'reporting for duty alone, out of sight, out of reach of his fellows,' yet he must do a sincere job, and not cook up exaggerated or faked reports. He must have courage and balance to endure a double life of strain and pretence, always expecting a tap on the shoulder, yet always outwardly calm and commonplace."

How can he do it? Not without training, the Americans soon found. Every European power had one or more schools for spies, whose pupils were men and women selected from the army or the civil population, taught mostly by others who from long sojourn were familiar

**The Spies' March.*

with the enemy countries, and had done some spying themselves. One notable exception was the celebrated and formidable Fräulein Doktor—real name Elsabeth Schragmueller—who, despite lurid romances, never did any spying, but with her knowledge of languages and her Ph.D. training, implacably drilled her pupils to spy, in her school in German-occupied Antwerp. Through a French intelligence officer there came to G-2-*B*, A.E.F., these maxims that she imparted to future German spies:

"When gathering information, do not appear curious or anxious to obtain it.

"Train the face to be absolutely impassive; obtain the revelation of important intelligence by inventing information during the course of the conversation, and expounding it with an air of mystery.

"Do not speak of confidential subjects in trains, on street-car platforms, or in cafés.

"Carefully avoid leaving letters, notes, hotel bills or addressed newspapers where they may be found, or throwing them into the waste-basket, even after tearing them up.

"Form the habit of recording observations by conventional words which are apparently harmless (accounts of expenditure, laundry bills, additions made on the outside of envelopes, etc.)

"Conceal the knowledge of a given language as far as possible, in order to hear the conversation of others.

"Appointments with persons from whom information is expected, should be made in some place as far away as possible from their place of residence, and from the agent's field of operation. It is even advisable to have them travel several hours by train, especially at night, for when men are tired, they are more expansive and less cautious than otherwise.

"Be satisfied with ascertaining half a dozen facts, rather than a hundred opinions. The latter, if expressed by fools, are worth nothing, and if expressed by persons of intelligence, may not be sincere, while the former, although they may not seem important at the time, may lead to appreciable results when once they have been ascertained and compared with others."

That is G-2 work: a jigsaw puzzle to be put together. An intercepted enemy radio message, a prisoner's statement, a spy's report. And—how reliable is the spy? If he is honest, does he really know his job? Was his training at the school at Chaumont perhaps too hasty, concerned more with the German army and what information about it G-2-*B* wanted, than the technique of his new and tricky trade?

Disguise could not avail him much; certainly not disguise in the melodramatic tradition. False whiskers, wigs, grease paint would not stand the wear and tear of war. To pass for a German one had to look, talk, act like a German—sometimes, be one. To avoid immediate arrest, false papers, passports, identity cards were necessary, and every secret service supplied its agents with them, thanks to expert chemists, printers and even ex-forgers. Sometimes, too, they carried socks or neckties soaked in secret ink, and hollow coins or cuff buttons to carry messages or credentials that might, in a crisis, save a life—or lose one.

What did men get for doing such work? It depended upon the men and the work. A bus-boy got $5.00 for searching a traveler's suitcase; a traitor high in the diplomatic service, $25,000 for advance information of important policies. The relatively few highly experienced and expert spies, frequently officers of the army or navy, got $5,000 or $10,000 a year and a large expense account. The rank and file got $1,000 or $2,000. Austria paid $100,000 to the saboteur who blew up a first-class Italian battleship. But the marvel is for how little ordinary spies could be hired.

The Americans paid well; report says $10,000 for positive news of movement of a first-class German shock division; $3,000 a month for valuable inside information from German officials in neutral countries; $500 for a map of the Heligoland fortifications.

Such pay went sometimes to informers like the professional spies who infested neutral countries, notably Switzerland, and to Germans—traitors, if you like. Colonel Nicolai says he had no American traitors working for his German military intelligence—the *Nachrichtendienst*. Real American secret agents got little special reward for daring death, not in a glorious jump-off with comrades, but alone at dawn, facing the muzzles of a firing squad. American secret agents who survived and were recommended for decorations did not receive them; but those men, and one woman, who died, are recorded as "killed in action." Republics are not utterly ungrateful.

In moving its hidden pawns, G-2-*B* minimized risk wherever possible by coöperating with the Allied secret services. By 1917 they had the Central Powers, Germany especially, enmeshed by a carefully thought-out organization of men under cover in important places: at General Headquarters, army groups and armies; in Berlin, the Krupp Works and Kiel. It even penetrated *Nachrichtendienst* centers at Antwerp and Lörrach. Sometimes these men worked alone, but frequently there was a group of men and women (and, occasionally, children), each working under a good camouflage, in a position of importance, knowing only the captain who acted as clearing house for all. He forwarded reports to and received orders from his superiors, usually through couriers posing as traveling salesmen or itinerant peddlers, less often by coded telegrams or letters in secret ink, by carrier pigeon or airplane, or hidden radio.

G-2 found the problem was not so much to place agents where they could get valuable information as to devise means to get that information out in time to be useful. A French agent at a German army headquarters found out beforehand about the Chemin des Dames attack of May 27, 1918, but his warning, like most spy messages, did not reach French G.Q.G. until the Germans were at Château Thierry.

The side-doors were about the only ways into or out of Germany. The front door of the Western Front was

barred; by 1917 Allied secret service chiefs could almost never get an agent safely across No Man's Land afoot, and not much oftener by airplane. If German listening sets missed, the pigeons he carried to send back reports might betray him, or the returning plane might not pick him up. So most spying upon Germany was directed from Holland, Denmark, and Switzerland. Often it was sheltered by Allied legations and consulates, but sometimes independent spy teams or individuals lent aid and comfort.

Agents could be got across the border into Germany, camouflaged as legitimate travelers, or smuggled across by "underground railways." Often they were nationals of neighboring neutral countries, who already had contacts in, and excuses for visiting, Germany. Some were German Independent Socialists glad to help overthrow the Empire; others were deserters from the army and navy. Allied and American intelligence services kept agents in villages bordering on Germany to work the "deserter racket." They pumped all German renegades who got through the barbed wire for information about conditions in the German army and civil population. They paid for such information, of course, and sometimes the deserter returned and asked more for not complaining to the local authorities of the "violation of neutrality," or for not revealing to the local German secret service what the Americans wanted to know.

Our naval intelligence launched upon the canals of Holland a fleet of canal-boats, ostentatiously in the carrying trade. They were manned by German deserters who had been especially useful to the Office of Naval Intelligence and who now, to keep their mouths shut, were supplied with jobs both peaceful and permanent.

The Army's most substantial espionage set-up was less whimsical. It consisted in planting at every principal railroad junction that fed the German lines facing the main American sectors, one or more "train watchers." Their business was to report daily and exactly, the amount and nature of railway traffic through those stations—especially troop-trains, supply-trains and hospital-trains. A sample paragraph from such a report would read:

> "Westbound: One train of 20 cars. A second of 23 cars, containing infantry, both old and young men. Five freight trains, one of 28 cars containing airplanes; one of 23, one of 34, one of 31, all containing ammunition. One of 30 carrying artillery.
>
> "Eastbound: Two Red Cross trains full of wounded."

German military trains were generally standardized in number and kind of cars used for each purpose—so many cars to a troop-train, so many such trains to a division. Train movements through Metz, Conflans, Cologne, Mainz, Coblenz, showed troop movements which indicated the German situation and intentions. General Nolan says that this information was consistently the most valuable G-2-*B* obtained.

The gathering of this data was neither spectacular nor glamorous, but hard, and frequently dangerous, especially in Coblenz where the spy-hunt was ruthless. Train watchers had to have good excuses for spending so much time in or near railroad stations and yards. Sometimes they were railroad employees, and got their reports out aboard passing trains. Belgian engineers skirting the Dutch border by night signalled across in dots and dashes by opening and closing their fire-box doors.

Across that same frontier sneaked the Russian spies who, for good American dollars, turned an interesting espionage trick. Veteran agents of imperial Russia, the Bolsheviki crossed them off the payroll. So they came to the Americans. They had the experience and contacts over Europe that we lacked. We tried them out on this job:

"Run over to Essen and see about this new invisible airship or something the Krupps are making."

That was the rumor Allied secret services had heard in the winter of 1917-18. They could not verify it so, somewhat ironically, we gave the Russians a chance. Without a murmur, they disguised themselves as workmen, and one after another, crossed the border from Holland to Germany. Soon they were at Essen, hard at work—by day for the Krupps, by night for G-2-*B*. They reported back:

"Invisible airship is not. But new long-range gun is. It can throw shell far behind Allied lines, as far as big railroad junctions, even Paris. It is a gun within a gun, and it is firing a shell within a shell."

"And the inventor," laughed the French when they heard, "is Baron von Münchausen!"

Then came that March morning in 1918 when the first shell sailed 72 miles to explode in Paris and jar the world. The first official French communiqué announced that the Germans had "bombarded Paris from a great height!" The invisible airships! Even when later the French announced it was Bertha, they did not say she was really Baron von Münchausen's "gun within a gun"—an eight-inch tube stuck into a fourteen-inch gun. The projectile was not exactly a shell within a shell, but it was different from other shells then used. And, while the French ignored our Russian agents' early warning, it helped speed to France five fourteen-inch American naval guns on railway mounts, intended among other things, to counter-battery the Berthas.

The part the American secret service had in putting across the ruse that made the Germans fear our blow at St. Mihiel might fall in Alsace, is little known, although many know how we faked a troop concentration about a new army headquarters at Belfort by reconnaissances and radio messages.

Now Belfort was a happy hunting ground for German spies who mingled readily with its Alsatian population and jumped quickly back and forth to Switzerland, switchboard of the *Nachrichtendienst*. In a hotel room there, Colonel A. L. Conger of G-2 wrote a letter to General Pershing reporting progress in preparing the coming attack. He burned letter and copy, but the crumpled carbon paper he threw into his waste basket.

Then he took a walk. When he returned the carbon paper was gone! Meanwhile, in Berne, certain Americans were told, "We're going to make a big attack in Alsace. See that the German secret service finds out about it."

As a result of these remarkable orders, attachés of the American legation and various army officers commenced searching Berne's bookstores for data on the topography of Alsace and maps. Greatly excited, the Germans set an experienced woman agent, known to the spy world of Berne as "Bella Donna," to work on a young American military attaché. This dark, handsome Russian with bedroom eyes had vamped many susceptible soldiers and diplomats in the lobby of the spy-infested Bellevue Palace Hotel. What wonder that, one evening in late August, 1918, the American fell a victim?

"How about a cocktail before dinner?" he asked her.

Eyes shining with excitement, natural as well as artificial, she accompanied him. Her charms multiplied that cocktail to several. Gradually the American sagged, his head rolled, and he slept. Deftly, aided by a German bartender, the woman extracted from his inside pocket a long, narrow envelope. Quickly, she slipped to her room and opened it. Her glowing eyes beheld a proper official communication "from" General Nolan "to" the American military attaché in Switzerland, directing that he collect forthwith and forward to G.H.Q. all dependable men who had been in Alsace or spoke its patois. Spies and intelligence officers for an invading army!

The woman spy photographed the letter, replaced it in its envelope, and slipped it back in the pocket of the still sleeping American.

When she handed her chief that photograph, she got a raise, but we wonder what she got two weeks later, when the great American attack came, not in Alsace, but 125 miles away, at St. Mihiel?

On August 30 the Germans ordered a general alarm in Mulhouse. They moved hospitals and bank reserves safely across the Rhine. Two divisions were moved up close behind the Alsace front. G-2 gleaned from prisoners and other means these and further indications that throughout the autumn and until the Armistice, the Germans dreaded attack in Alsace. Indeed, von Hindenburg himself said so.

The Germans also dreaded, with better reason, the collapse of their ally, Austria-Hungary. That collapse was caused partly by the foremost of American World War secret agents, Emmanuel Voska. American citizen, though Czech born, this energetic, magnetic character seized the opportunity of the World War to work in New York for Czechoslovakian independence. Secretly he built up, through American-Bohemian societies, a Czech spy system in Austrian and German circles, including the consulates. This system gave much valuable information to the British intelligence service and helped disclose the German plots that swung American opinion toward the Allies. When Count von Bernstorff went home, Milada Jamchek, an attractive Czech woman spy, was included in his entourage. Caught, convicted, she is said to have been saved by this laconic message from Voska to Bernstorff: "If she dies, so do you."

Bernstorff was in Berlin, but Voska's men and the great spy himself were everywhere in Central Europe. Voska, who had previously been commissioned a captain in the American army, was sent by our M.I. D. to form the "Voska Group" or "Italian Section" of American intelligence. Its base was behind the Italian front, at Padua, whence it undermined the Austro-Hungarian Empire. Its tentacles stretched from the Balkans to the Baltic. In return for news of the enemy the Czech groups which formed this ubiquitous net received news of Allied victory, propaganda for hostile consumption. Desertion, always rampant in the armies of the Dual Monarchy, increased by leaps and bounds.

At the front, Voska's "language patrols" carried on the good work. Nightly these tireless workers crawled into No Man's Land, and in Czech or Slovak sympathized with the weary conscripts in Austrian uniform, encouraging them to tell of their hardships and urging them to desert.

"We'll give you good food," they said, "and a chance to fight for Czech independence."

Oddly enough, American M.I.D. was helping build up those Czech legions that with the Italian army were to bear the red and white over the top against the hated Austrians in the final victory of Vittorio Venetto. Meanwhile, the country behind was honeycombed by Voska's men disguised as Austrian soldiers. Voska himself even went to Berlin and there mailed his autographed photograph to the counter-espionage chief who had advertised for him "dead or alive." Much alive, Voska today is a prominent citizen of Czechoslovakia. He is a picturesque personality.

Voska's group included the only woman shot for espionage under M.I.D. Behind the Austrian lines, she printed thousands of bread and meat tickets which were distributed widely among Czech patriots. The provision stores were stripped and famine threatened. The woman faced a firing squad but added impetus had been given to the cry for peace. The will to war was breaking fast.

Allied secret services were in touch with the Independent Socialists who brought about the German revolution, and their reports accurately foretold the course it would take. The Allied agents supplied German Reds with money and with propaganda in the form of leaflets, newspapers and fake books, often containing President Wilson's speeches. They financed groups of German deserters in neutral countries in touch with Red groups in Germany, which in turn aided Allied spies. Allied agents conferred with German revolutionary leaders in Berlin a few days before the revolution broke and on October 30, 1918, a branch of the American secret service warned Chaumont and Washington that the day was near at hand.

Revolution brought the Armistice, but it did not bring peace in the secret war. How real was the German revo-

lution? Would it last? If not, what then? Was Germany really half-starved? Could and would she fight again? To those and many other questions, President Wilson wanted answers, and turned to G-2-*B*.

General Van Deman set up a secret service for the American Peace Commission. He sent agents to Germany. One was an American woman journalist who took up residence in Berlin. There she met prominent people from whom she extracted much valuable information. Her reports came back to G-2-*B* over the signature "Q." She unearthed a Junker plot to annex Lithuania and later tracked down a woman Bolshevik in the Düsseldorf affair. After these signal achievements she went to Russia where she was eventually trapped and narrowly escaped execution.

But in spite of "Q's" successes, G-2-*B*'s experience justified Sir Basil Thomson's dictum: "Women do not make good spies; though married men may not believe it!" Too temperamental, he thought; apt to fall in love with the man they are "put on!" G-2-*B* had one seriocomic disaster, and as a result General Nolan forbade the use of women spies. In spite of this a few did creep in.

While "Q" was in Berlin, so were "A-1" and "A-2" —a pair of sergeants of the Corps of Intelligence Police chosen for their knowledge of German. They posed as newspaper correspondents, to report political and economic conditions. "A-1" lived at an inn frequented by Reds, worked into workmen's and soldiers' councils, met Spartacist leaders and warned of a coming uprising they were plotting. Then he wormed his way into the German War Office and the good graces of a *fräulein* who slipped him a copy of a plan for the reorganization of the German army. This reached Paris in time to stiffen the disarmament terms of the treaty—now scrapped. His "grapevine" was the G-2-*B* officer unobstrusively attached to General Harries' mission of American officers supervising the return of prisoners from headquarters at the Hotel Adlon. There American agents drew the rations of chocolate, toilet soap and other luxuries that were priceless bribes.

Then "A-1" and "A-2" got the prearranged warning: "There's a food package for you at the Adlon!"

German suspicions had been aroused. Twenty-four hours later, "A-1" and "A-2" arrived at Trier, General Pershing's advanced G.H.Q. for gathering information about German politics. Here a G-2-*B* officer persuaded "A-1" to return to Berlin and feed false information about our Third Army to the celebrated German master spy, von Schenck. Meanwhile, another officer drove from Trier on midnight rides, first to von Hindenburg's headquarters, then to Berlin. There he persuaded German leaders that President Wilson really would not sympathize with them for refusing to sign the Treaty of Versailles! They had thought he would!

We watched closely to find out if the German army could again put up a fight. German-American secret agents flitted about the Coblenz bridgehead—and beyond. They were authorized to go "anywhere at any time, day or night, by any means of conveyance in any uniform or civilian clothes . . . carrying a concealed pistol or revolver . . . and must not be delayed . . . with priority over all others." So read their passes. They gathered more accurate information than did other Allied agents, so the actual check-up showed.

We had a good peep hole on the Rhine, the Risenfuerstenhof Hotel at Coblenz. G-2-*B* made it a spy trap with agents for employees and dictographs in many rooms. All suspected strangers were lodged there.

There were plot and counter-plot a-plenty in those days. Such was the Düsseldorf affair. A cosmopolitan group of Communists, with Russian experience, tried to incite American and Canadian troops on the Rhine to mutiny. The leader was Robert A. Minor, son of a Texas federal judge, now a prominent Communist in New York.

In Düsseldorf, this group printed circulars urging overseas soldiers to rebel against their "capitalist masters" and go home. These circulars were entrusted to a daring comrade named Siegfried, who was charged with the task of smuggling them into Coblenz. This he did by taking the train, hiding the circulars in the toilet and there sitting on them. When he reached Coblenz, he delivered them to Colonel R. H. Williams, of G-2, who had sent him to Düsseldorf to do just that. Later Siegfried led the plotters into the British lines near Cologne, "escaped," testified at the British court-martial, and won a British decoration—but not an American decoration. Siegfried, "A-1", and a third agent who detected a plot to blow up munitions, were all recommended for the Distinguished Service Medal, but that was as far as it got. This republic does not overwhelm with gratitude those who serve it in the secret war.

NATIONS SHOULD NEVER *be surprised by their own unpreparedness. It is pardonable to be defeated, but never be taken by surprise.*—FREDERICK THE GREAT.

Practical Training of Reserve Units

By Colonel R. H. Williams, C.A.C.

ALL officers on duty with the Reserve component are fully aware that the problem of practical, interesting and worth-while training of Reserve regiments during fifty weeks of the year is a difficult one. No equipment of any description is furnished to Reserve units by the War Department for this purpose, therefore it is up to the personnel of these units to devise means for training during the long inactive duty periods, in order that they may obtain the greatest benefit during the short and infrequent active duty periods: in addition, interest must be kept up at all times.

Colonel Frank J. Baum, commanding the 519th C.A. (AA), devised and constructed for the use of his regiment an antiaircraft training game that is interesting, workable and efficient. Miniature models of all vehicles belonging to a completely motorized AA regiment have been purchased or constructed; including guns, prime-movers, searchlight trucks with trailers, sound-locators, cargo trucks and passenger cars. In the solution of a problem or exercise, officers are required to place these vehicles in proper position for marches, parking or the occupation of a position.

Colonel Baum and his officers have demonstrated what can be done by the exercise of a little initiative and energy and are passing on to their brother antiaircraft officers the results of their endeavors, through the medium of the Coast Artillery Journal.

Object

The object of this game is to provide an interesting means for the training of Reserve officers in matters essential to the proper performance of their duties. These include:

1. Speed, altitude, methods of identification, and the indication of targets.
2. Selection without delay of the proper target.
3. Use of proper and uniform commands.
4. Type forms of airplane attack with the best methods to be employed in meeting each.
5. Rapid estimate of the situation.
6. Use of emergency conditions.
7. Accuracy and rapidity of fire and its probable effect.

Material and Accessories

The fire control table is four feet square with a circular opening, two feet in diameter, cut in the center; in this the Battery Commander is seated on a stool facing theoretical NORTH. Directly in front of him is marked the center of his battery position; this is considered to be at one angle of a 6000 yard equilateral triangle having a gun battery at each of the other exterior angles. The critical zone lies before him while the DEFENDED AREA is considered to be the space occupied by the officer. For use in machine gun problems, the battery position marked on the table is considered to be the center of the machine gun platoon.

The airplane frame consists of four uprights, forming a square eight feet on each side. The fire control table is placed in the center of this frame. A piece of chicken wire entirely covers the top of the square.

Bomber, pursuit, attack and observation planes are represented by small toy airplanes suspended from the chicken wire by means of khaki colored linen threads and small hooks. (Another use for paper clips). Different lengths of threads are used to vary the altitude of the planes. Planes may be used in flights, squadrons, wings or singly as desired. Hostile planes are marked with a red dot on a white square while friendly planes have a double blue line as a distinguishing mark.

Each type of battery, i.e. gun or machine gun, is provided with a range tape by means of which the approxi-

Miniature models of all vehicles belonging to a completely motorized A.A. regiment.

mate slant range of a target from the battery can be quickly determined. This tape is marked to a scale of 1 inch equals 100 yards for gun batteries and 1 inch equals 25 yards for machine gun batteries. One end of the tape is pivoted at the center of the battery position on the fire control table. This tape provides for an extreme range of 8,000 yards for guns and 2,500 yards for machine guns. When a battery commander assigns a target, the range to the target is measured by this tape and is marked on the "Battery Commander's Report" blank by the Range Officer, thereafter the range is measured for each move.

A clock is provided for the Battery Commander, and a larger clock, operated by the Range Officer, is provided as a guide for all concerned.

At the beginning of the first move, the dials of both clocks are set at 12; thereafter, as each completed move is made, the master clock is advanced one number. When the B.C. assigns a target to track, he sets his clock two moves ahead which is the time allowed for the B.C. to estimate the situation and issue his orders to open fire. (If the B.C. assigns a target at move 4, he sets his clock at 6. When the master clock has been moved to 6, the battery must be ready to open fire.) Thereafter, at the end of each move, the battery is considered to have fired for 15 seconds. The number of rounds fired will depend upon the orders given by the B.C. A maximum of seven rounds per gun (28 rounds for the battery) is allowed for continuous fire of maximum intensity.

Hits and misses are scored for each move by drawing cubes from the hit bag. One cube is drawn for each round per gun. The numbers marked on the cubes represent thousands of yards of range; to score a hit it is necessary to draw a number equal to, or greater than, the range to the target for that move, as posted on the "Battery Commander's Report" blank. Only four cubes may be drawn at a time and these must be replaced in the bag before drawing cubes to represent the results of the second round.

The percentage of hits to be expected at the different ranges are as follows:

RANGE (Yds)	DAY FIRING		NIGHT FIRING	
	Per cent Hits	No. cubes	Per cent Hits	No. cubes
1,000	90%	30	90%	48
2,000	60%	29	42%	24
3,000	31%	15	18%	10
4,000	16%	8	8%	3
5,000	8%	4	4%	2
6,000	4%	1	1%	1
7,000	2%	1	1%	1
BLANKS		12		11
Totals	100%	100	100%	100

BLANK FORMS: A "Record of Ammunition Expenditure" form is kept by the battery Executive Officer. It is ruled as follows:

RECORD OF AMMUNITION EXPENDITURE

Battery Commander: ..... Date .....

Serial No. of Flight	Range, Yds.	Target	Hits	Misses	

A "Battery Commander's Report" form is kept by the Range Officer. It is ruled as follows:

BATTERY COMMANDER'S REPORT

Battery Commander ..... Date .....

Serial No. of Flight	Time of		Description		Type	Range Yds.	Rds. Fired
	Arrival	Departure	Formation	No. Planes			

For night practice and for use in training the officers of the searchlight battery, two "searchlights" are provided. These consist of a pencil-type flash light mounted in a cradle on a wooden base. A small pulley is attached to the rotating bar of the cradle. Another pulley is mounted at the foot of the cradle. Through these pass a cord actuated by a small hand crank. The base of the cradle is free to rotate 360 degrees. It is traversed by a series of pulleys mounted on the upright supporting the base.

Two of these searchlights (operated by officers) are used for night practice. The B.C. locates his lights to the north of the fire control table, at a distance of approximately five feet. (On a scale of 1 inch to 100 yards, this is equivalent to a distance of about 6,000 yards from the battery position.) Each light is put into action and maneuvered by command of the searchlight battery commander.

Method of Operation

The Battery Commander takes position in the center of the fire control table. He is handed a typed sheet giving the general and special situation. At the same time this is read aloud by the Chief Umpire for the information of all concerned. The special situation gives the theoretical location of the battery. The B.C. is provided with a large scale map so that he may orient himself and locate the direction and position of the advanced listening posts.

The B.C. is allowed one minute to become familiar with the situation and to locate advanced listening posts on the map. At the end of this time, the Umpire rings a bell (or blows a whistle) and then reads a series of three or four FLASH REPORTS received from one or more of the advanced listening posts. As soon as the reading of these reports is completed the B.C. is allowed 30 seconds to make an estimate of the situation. This will include his conclusions as to the time required for any or all of the planes to reach his battery position, the direction of the expected attack and his decision as to kind of fire he will use, based upon the orders and missions given him in the special situation.

The following officers are assigned for the problem:

Chief Umpire,
Battery Commander,
Battery Executive,
Battery Range Officer,
Timekeeper,
Officer in charge of air tactics and
Assistant officer for air tactics.

Each completed move represents 15 seconds of actual time, although in playing, 30 seconds are allowed the B.C. A move consists of operations by the B.C. and the officers in charge of air tactics. When the planes are ready the blindfold is removed and the timekeeper allows the

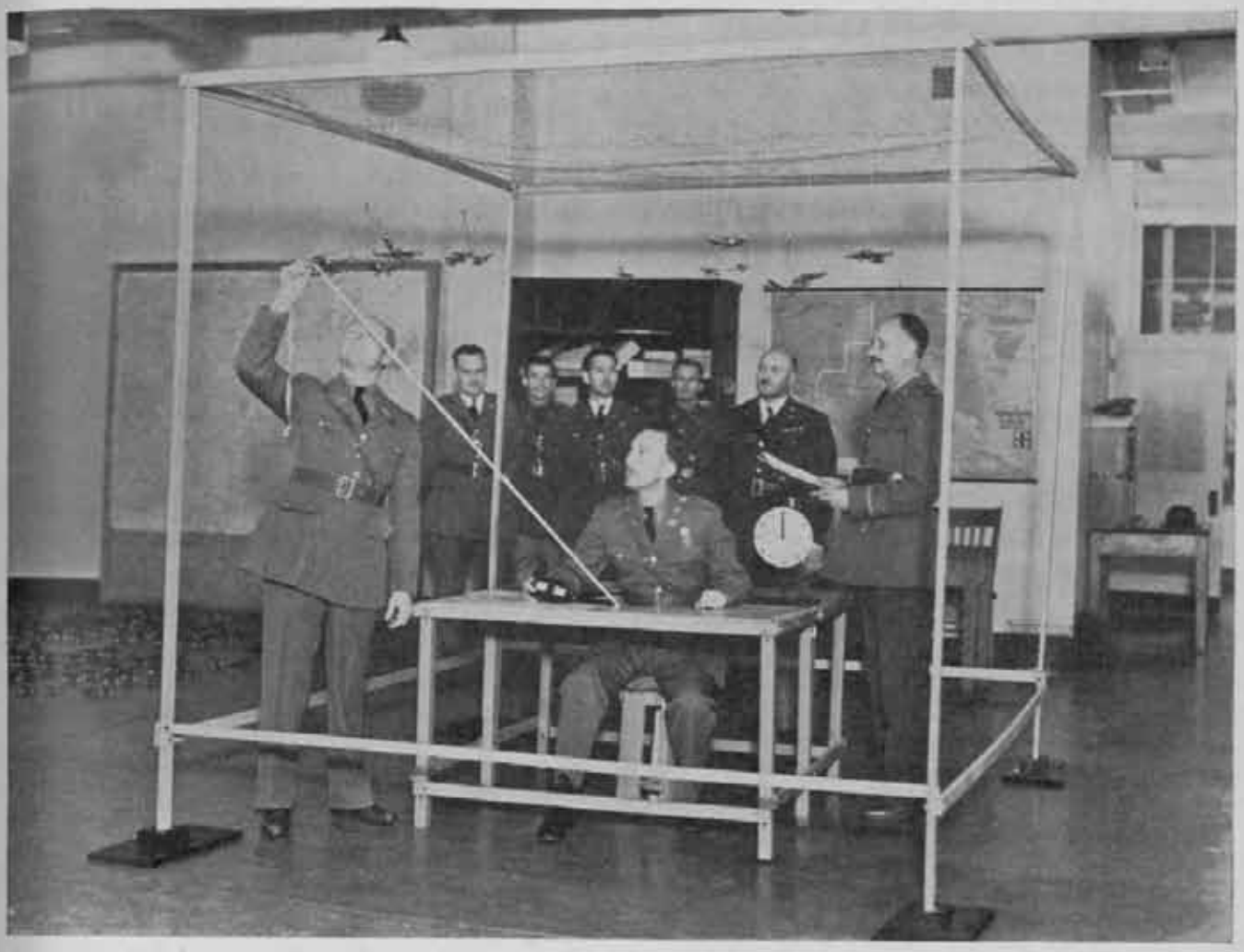

The fire control table and airplane frame, with the range tape in use.

B.C. 30 seconds before the blindfold is replaced and the airplanes moved the distance they would pass over in 15 seconds of flight, on a scale of 1 inch to 100 yards for guns and 1 inch to 25 yards for machine guns. While the airplanes are being placed or moved, the B.C. is blindfolded.

Initially, the planes are set at a point just beyond extreme range and altitude. The Chief Umpire states the weather conditions (clear, fog, rain, snow, etc.) and the degree of visibility, if not stated in the special situation.

It is assumed that bombers have a speed of 205 miles per hour (100 yards per second) and maximum altitude of 20,000 feet. Pursuit planes 225 miles per hour; attack planes 180 miles per hour, observation planes 200 miles per hour.

At the beginning of the "night practice" the two officers in charge of searchlights and the B.C. of "A" Battery are blindfolded as soon as the flash reports have been received. The planes are then put in position, the room is darkened and the blindfolds removed from the B.C. of the firing battery and all searchlight officers. Each light is put in or out of action, caused to search, cover or follow by proper commands. Officers handling the lights are not allowed to move them in any way except by means of the cords operated by small cranks.

Flash reports should contain the following information:

1. Name or number of advanced listening post.
2. Number of aircraft reported (several, many, 1, 2).
3. Type (bombers, pursuits, etc.) or merely "planes."
4. How information was obtained. (Seen, heard, reported).
5. Location of planes with reference to some terrain feature.
6. Direction of flight. (Direction in which planes are flying or the clock direction from the advanced listening post).
7. Altitude: (Very low for 500 yards or under; low, for 500 to 2,000 yards; medium, for 2,000 to 4,000 yards; high for over 4,000 yards).

Advanced listening posts will be located on the general large scale map at the beginning of the problem, at 12,000 to 18,000 yards distance from the battery position and will be designated by name or number in the special situation given the B.C.

The sequence of commands are:

B.C.—"Prepare for action"

Exec.—"Prepare for action"

Range Officer—"Prepare for action"

Exec."Sir, the firing battery is in order"

Range Officer—"Sir, the operations section is in order."

When plane is in range or coming in range, the B.C. orders:

1. Target.
2. Class of plane.
3. Sector. (The field of fire is divided into local sectors as marked on the fire control table. Each sector is painted a different color and the name of the sector is painted upon it).
4. Altitude
5. On target or report. (When Range Officer reports "SEEN!").
6. Track. (Or "Stand By" as the case may be).
7. Class of fire. (Continuous; interrupted; volley, etc.).
8. Commence firing. Suspend firing. Change target. Cease firing. — Depending upon the conditions.

Information for Reference

3" AA gun—powder fuze: Maximum vertical range 25,650 ft. Maximum horizontal range, 7,550 yds.

Cal. .50 machine gun: Maximum vertical range 15,000 ft. Maximum horizontal range 1,500 yds.

Day of fire: 3" guns. 300 rounds per gun. Cal. .50 machine gun—4,500 rounds per gun.

Maximum rate of fire: 3" gun. 28 rounds per gun per minute. Cal. .50 machine gun—600 rounds per gun per minute.

Ammunition supply: In the battery—½ day of fire. In regimental combat train—½ day of fire. In Corps Quartermaster Train—½ day of fire. Balance obtained at railhead or ammunition distributing point.

Airplane Formations

3 planes ..... 1 flight.
3 flights ..... 1 squadron.
2-3 squadrons ..... 1 group.

Pursuit usually operate in large masses.

Attacks usually operate at low altitudes, just above tree tops. During day they operate in large masses; at night, singly or at short intervals.

Bombardments, by day in large masses supported by pursuits or attack planes; at night, a succession of individual planes.

Maximum Ranges with 20 Second Fuze

PHI MILS	Horizontal Yards	Altitude Yards
300	7737	747
400	7580	1522
500	7339	2287
600	7011	3033
700	6599	3747
800	6103	4421
900	5534	5045
1000	4889	5607
1100	4180	6101
1200	3415	6514
1300	2606	6846
1400	1756	7079
1500	879	7222

At 6,000 yards horizontal and 5,700 yards altitude (17,000 ft.) the slant range is 8,276 yards.

Plane Out of Range

Horizontal Yards	Altitude Yards
8000	Any altitude
7500	1000
7000	3500
6500	4000
6000	4500
5500	5200
5000	5800
4500	6000
4000	6300
3500	6700
3000	7000
2500	7000
2000	7200
1500	7200
1000	7300

For further information of fire control tactics, study "Coast Artillery Field Manual" Vol. II, Antiaircraft Artillery, Part I-Tactics, pages 18 to 22 inclusive.

PENALTIES

	Deduct:
1. B.C. not completely oriented in time allowed	10%
2. B.C. not completed his estimate of situation in time allowed	10%
3. B.C. making a wrong estimate of situation	15%
4. B.C. opening fire before plane is in range	5%
5. B.C. continues to fire after plane is out of range	10%
6. B.C. fires upon wrong target. (Improper priority)	10%
7. B.C. fires upon friendly planes	10%
8. B.C. (Gun) fires on target too low for proper effect (MG) fires on target too high for proper effect	5%
9. B.C. uses unauthorized or improper commands	10%
10. B.C. fires on target in zone of another battery when a proper target is within the zone of his own battery	10%
11. B.C. continues to fire after his ammunition is exhausted	5%
Total penalties	100%

Emergency Methods of Fire Control

Part III

By Captain James T. Campbell, C.A.C.

After all that has been written about fire control with aerial observation, it may seem rather foolish to give another whole article to the subject. But the method is so primitive and the ideas involved are so simple that it makes the best starting point for a general discussion of emergency methods. It will be recalled that in the preceding article one figure showed the actual, corrected, adjusted, and ballistic courses for a target moving in a straight line at uniform speed. This article shows how this shoot might have gone if the airplane method of fire control had been used.

The shoot is started by assigning the target to the airplane observer, by radio, giving him all possible information as to its location, appearance, or anything else that is known and will assist him. The observer determines the location of the target the best way he can and transmits the result to the firing battery by some prearranged code. Several different methods for doing this have been devised and tried out, but, for present purposes, the only thing that matters is that this location puts the first shot close enough to the target to be spotted. Any error in this initial location is wiped out by the correction made after the first shot is spotted.

Let it be assumed that the observer reports: range, 10,500 yards; azimuth 1850 mils; target moving along a course whose azimuth is 335 degrees; speed of target, 17 miles per hour (510 yards per minute); time of observation, 8:17 A.M. Ballistic corrections are applied to the reported range and azimuth, for it must be remembered that the course to be plotted on the board is the ballistic course and each point on the board corresponds *directly* to a particular pointing of the piece. The corrected range is 9880 yards and corrected azimuth is 1823 mils. These data are plotted on the board and the point thus determined is marked A, as shown in Figure 1.

Suppose that the first shot is to be fired at 8:20 A.M. This is three minutes after the time of observation, and, at the reported speed, the target will move 1510 yards during this interval. A line is drawn from point A in the direction 335 degrees (the reported direction of the course), and on this line the point P_0 is laid down at a distance, to the scale of the board, equal to 1510 yards from point A. Point P_0 represents the firing data to be used for the first shot. Two questions arise here and must be settled at once.

Since the points plotted on the board correspond to pointings of the gun, how can the direction of the course in the field of fire be plotted directly as a direction on the board? The reason is practical. Careful examination of the theoretical bases of the problem will show that the ballistic course is not parallel to the actual course. Theoretically this would be sufficient to rule out the proposed action. But the ballistic course is so nearly parallel to the actual course, because of the use of the range-elevation

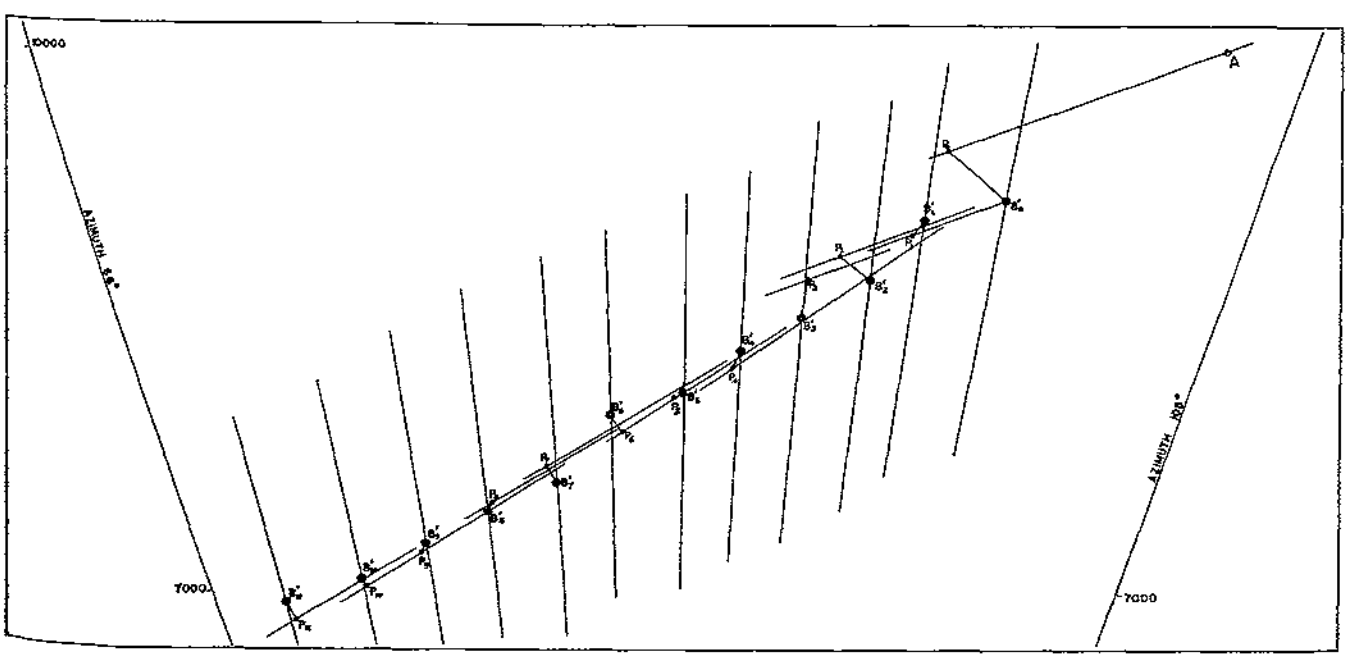

Figure 1

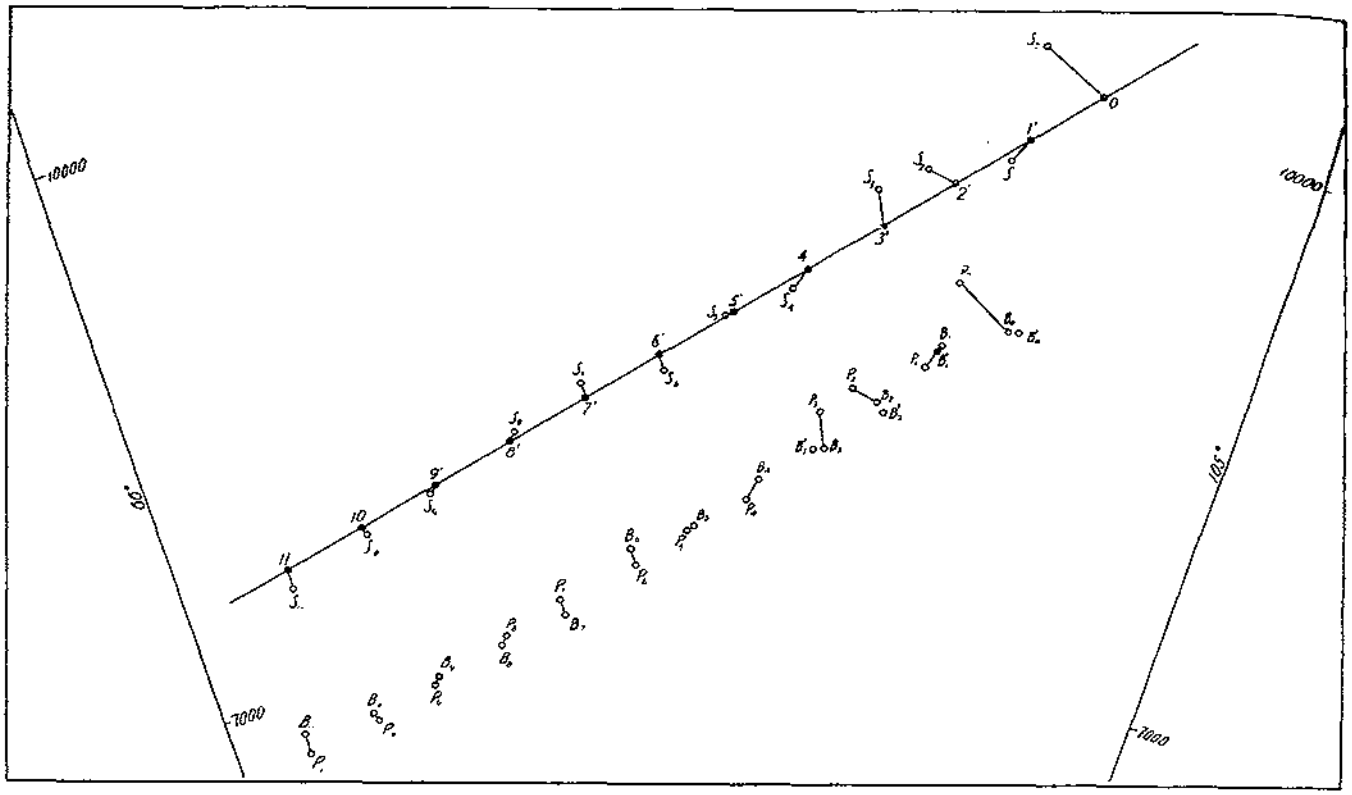

Figure 2

relation in plotting ballistic points, and there is so much likelihood of error in the original location of the target, in its reported course and speed, and even in the ballistic correction calculated at the battery, that one is justified in drawing the line through point A and proceeding as above.

Why was the time of flight disregarded in calculating the distance from point A to point P_0? To many it will appear incongruous to make the ballistic correction (which many officers distrust) and then throw away the travel during the time of flight. Again the reason is practical. When big guns are fired at great ranges the ballistic correction may be quite large, even in comparison with the errors in initial location. Furthermore, the ballistic correction can be calculated and applied by the normal use of existing plotting room apparatus, without confusion or loss of time. But the travel during the time of flight will never be very great, and to include it in the prediction would involve pencil and paper calculation or special apparatus, with resulting confusion. Of course, if it can be included quickly and without confusion, as by using whole minutes and estimated fractions, it should be done.

The firing data represented by point P_0 has been selected for firing the first shot. The range to that point is set on the range drum and the azimuth is set on the azimuth scale of the gun. At the predetermined instant the shot is fired. Attention is now invited to Figure 2. In this figure, O′ represents the position of the target at the instant of impact, and B_0 represents the firing data that would have given a hit. Both of these points are transferred from Figure 3 of the preceding article. P_0 represents the data selected for firing, being the same as P_0 of Figure 1. Since the selected firing data are over and to the left of the firing data that would have given a hit the shot will fall over and to the left of the target, at the point marked S_0. The deviation $O'S_0$ is what is seen by the spotting observer.

The report of observation is given in clock code. The clock is centered on the target and oriented so that 12 o'clock is the direction in which the target is moving. This first shot would be reported 2 o'clock 400 yards, meaning that it falls nearer to the two o'clock line than to any other and that the absolute deviation is 400 yards. Deviations are reported to the nearest hundred yards unless they are less than one hundred yards, in which case they are reported to the nearest fifty.

The plotter, having received the report of spotting, locates the ballistic point for that shot. Since the shot fell over and to the left, the firing data that should have been used is down and to the right of that which was actually used. The ballistic point is most easily plotted by centering the clock on the point representing the firing data used, point P_0 in this case, with the 12 o'clock line *opposite* to the direction in which the target is supposed to be moving. This step is seen in Figure 1. The ballistic point thus determined, B'_0, has been transferred to Figure 2 for comparison with the real ballistic point for this shot. In the latter figure the divergence of B'_0 from B_0 shows the total effect of errors in spotting, both those due to the crudeness of the spotting clock and those due to the fact that the actual movement of the vessel is not as reported.

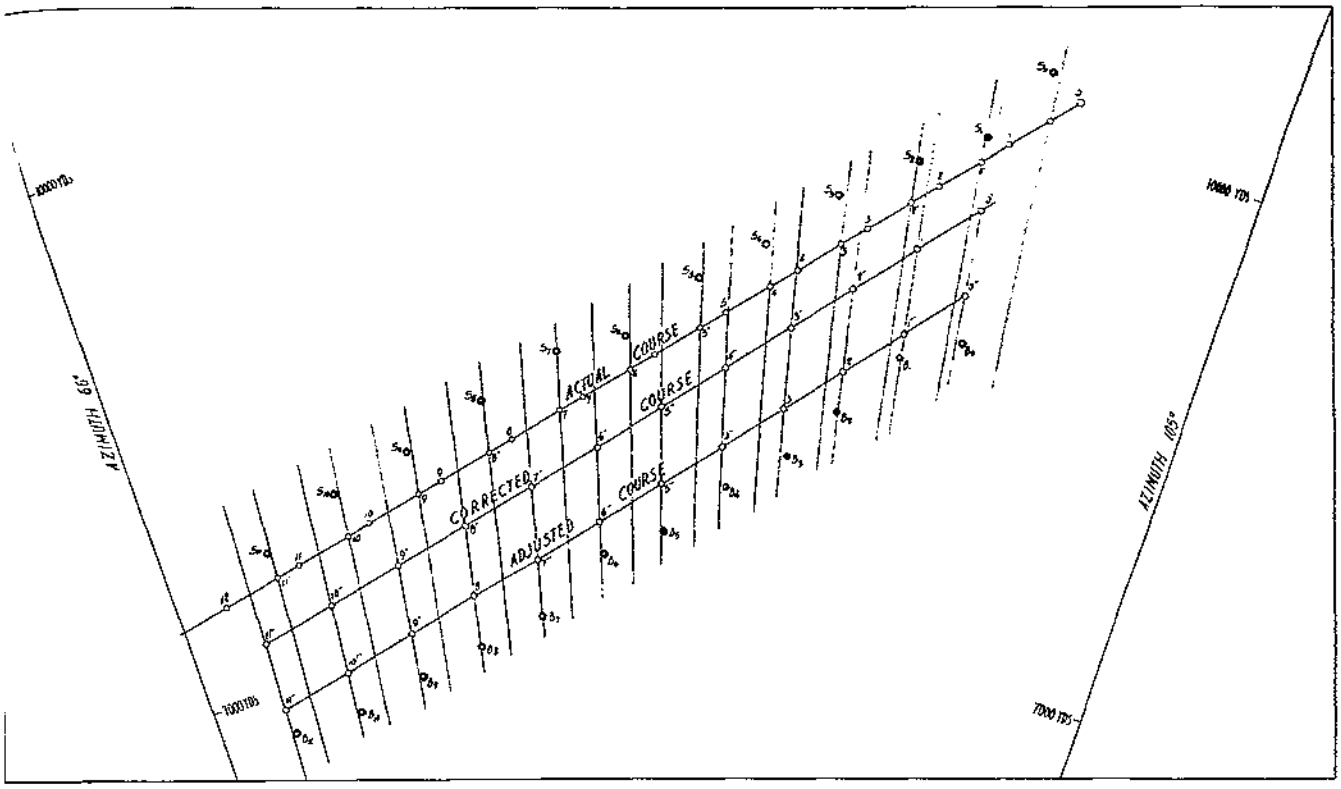

Figure 3

The use of the spotting clock, oriented as described above, is sometimes questioned. There are those who believe that the spotting should be referred to the gun-target line, while others believe that it would be better to orient the clock on magnetic north. There are strong objections to both of these proposals. The use of the gun-target line supposes that the gun will be visible from the spotting airplane, and it is better to make the method independent of this condition. The use of magnetic north will be faulty as long as the compasses used in airplanes remain as they are. When these compasses are improved the reported direction of the vessel's movement will be more reliable, and the course of the target will then remain as it is now, the most accurately esablished direction in the vicinity of the target as well as the most convenient.

To proceed with the adjustment of fire, the plotter draws a line through his first ballistic point, parallel to the line used in making his first prediction, and measures along this new line a distance equal to the reported travel of the target during the time between shots. The reasons are easily understood. The line is moved so as to pass through B'_0 because the information given by a single well spotted shot is so much better than the information given by the initial report of location that the latter is negligible in comparison with the former. The plotter's assumptions as to course and speed have not been influenced in any way by the fall of the single shot, so that the new line is parallel to the old and the distance measured off is based on the observer's initial report. It is assumed that the time of flight does not vary between shots.

This is an appropriate time to mention a view that is faulty if not fallacious. It is commonly said that "We assume that the first shot hits the point fired at." It is true that, insofar as plotting on the board is concerned, the effect of this assumption is exactly the same as that of the assumption that the point B'_0 represents the firing data that would have caused the shot to be a hit. But the logic is quite different. One train of thought leads to a rather fantastic shifting of the course of the target, while the other leads to a perfectly sensible prediction along a line of ballistic points. One leads to illogical confusion and difficulties in the expression of ideas, while the other is perfectly logical and permits ideas to be expressed very clearly and accurately.

Point P_1 of Figure 1 represents the firing data selected for the second shot. It is transferred to Figure 2 for comparison with the ballistic point for that shot in order that the deviation may be determined. The shot falls at S_1 and the deviation is reported 11 o'clock 100 yards. The ballistic point is plotted on the plotting board and is indicated in Figure 1 at B'_1.

Before the prediction can be made for the next shot there are several questions to be settled. First, take the question of the direction of the line along which the prediction shall be made. Will this new line be parallel to the old line, or will it be swung so as to pass through both of the ballistic points now plotted? Consider the effect of dispersion on the direction of the line drawn through the ballistic points. It is well known that the dispersion in range is quite large, even with the best shooting guns. It is also easy to see that a change of as little as one hundred yards in the range to either of the

ballistic points will swing the line through several degrees. It is therefore apparent that as long as the observer's report of direction of movement is given a reasonable degree of credence the indication given by him should be preferable to that given by the trend of two ballistic points. The new line will therefore be drawn parallel to the old. While this subject is up for discussion it might be well to add that experience has indicated that the change of direction should be made on not less than four ballistic points. Theoretically, the minimum number of ballistic points will depend upon the angle between the gun-target line and the course of the target, the dispersion of the gun both in range and in direction, the number of shots in each salvo if firing is by salvo, and the reliability of the observer both in reporting direction and in spotting. No one has given a complete theoretical discussion of this problem, but it does not seem to offer any serious difficulties.

Since it has been decided that the direction of the line of predictions shall not be changed, the next thing to be settled is whether or not it should be moved parallel to itself, and, if so, how much. If it were certain that the direction of the line of predictions is correctly established, a movement of this line parallel to itself would be equivalent in all respects to the application of a percentage correction in range when normal methods are being used. (See proposition 1, preceding article.) In that case the normal rules for adjustment of fire would apply. But when the present method is being used, the direction of the line is open to doubt. This doubt is especially justified when the ballistic points all lie on the same side of the line of predictions, so that the rule is stated, "Make full corrections until the target has been crossed." In this particular shoot the target is crossed by the second shot, that is, a down correction has given a short, and a reasonable degree of confidence in the direction of the line is justified. The decision is therefore to adjust by the rule of successive approximations, moving the line parallel to itself one-half of the distance to the ballistic point for the second shot.

Next, the distance to the predicted point must be laid off, and decision must be made as to where this measurement will start and how great the distance will be. Here one takes advantage of the fact that the target is crossing the gun-target line at an angle reasonably close to ninety degrees. The lateral dispersion of the gun is known to be small, and, assuming a reasonable degree of accuracy in spotting, the movement along the line of predictions should be pretty well indicated by the positions of the ballistic points. Radial lines are drawn through the ballistic points, i.e., lines connecting the ballistic points to the gun arm center. This may be done rather sketchily and the lines do not need to be very far extended. Then, along the line selected for the new line of predictions, the distance between these radial lines is measured. This same distance (it turns out to be 460 yards) is laid off from the radial line through the second ballistic point, thus determining the prediction for the third shot. This shot is reported 2 o'clock 200 yards.

The prediction for the fourth shot is made by shifting the line of predictions one-third of the way to the third ballistic point, thus continuing the adjustment by successive approximations, and measuring along that line the average distance between the ballistic points already plotted. The shot is spotted 4 o'clock 200 yards.

Four shots having been fired, the rule permits a change of the direction of the line of predictions. A change is clearly indicated. A new line is passed through the center of the group of ballistic points and its direction is chosen so that it runs as close as possible to each of them. The average distance between intersections of this line with the radial lines through the ballistic points is about 430 yards, so this distance is laid off along the new line, measuring from the intersection with the radial line through the last ballistic point. This prediction is marked P_4. The shot is spotted 11 o'clock 100 yards.

Most of the principles that enter into this kind of shooting have been shown by this example so far. The remainder of the shoot is shown graphically in the figures and is passed over without detailed description. One important principle, not shown explicitly by the foregoing discussion, should be more fully expressed before leaving the subject. The ballistic point has been defined as that point which represents the firing data that would have caused the target to be hit. Under this definition, and considering the target as a single point, the ballistic point has a fixed position independent of the data with which the shot is fired. The ballistic point actually plotted on the board is affected by errors in spotting and errors in assuming that the gun would have responded yard for yard with changes made in its pointing. But even in practical work on the plotting board, the ballistic point must be considered as fixed. This means that each point has a definite position that is not affected by any manipulations of the line of predictions. As long as the spotting reports are correctly plotted from the data actually used in firing, all previous errors in adjustment may be wiped out by a single good prediction. In this respect the ballistic points are analogous to the crosses plotted on the standard fire adjustment board. In fact, there was a time when the points marked by these crosses were called ballistic points.

Here one has seen what is essentially the standard method for fire control with aerial observation. It has its valuable points as well as its defects. The next article will give an analysis of some of these defects with suggestions for improvement.

Joint Maneuvers

15th Obs. Sqn., 61st Coast Artillery (AA)

By Lieutenant Colonel C. B. Meyers, C.A.C.

THE 15th Observation Squadron, Scott Field, Ill., Major William C. Goldsborough, A.C., Commanding, and the 61st Coast Artillery (AA), Fort Sheridan, Ill., Lieutenant Colonel C. B. Meyers, C.A.C., Commanding, participated in a joint exercise and field training during the period May 22-June 14, 1935. The 15th Observation Squadron, after a two days' march from Scott Field, arrived at Fort Sheridan on May 11. The period May 12-22, was utilized in local training and the organization of the joint force. The normal staffs of the two units were united into one staff for the duration of the exercise.

The Joint Force comprised about 43 officers, 375 enlisted men, 12 airplanes and 125 modern motor vehicles of all types.

Of the 12 airplanes, one was a tri-motored Ford transport, two were ships equipped to lay smoke screens, and the others were observation planes of the O-19 type. One Air Corps Reserve and thirty Coast Artillery Reserve officers received two weeks of active field training during the exercise.

Starting from Fort Sheridan, the route of march was clockwise around Lake Michigan with stop-over points at Milwaukee and Kewaunee, Wisconsin, and Cheboygan, Traverse City and Muskegon, Michigan. The longest march made by the 61st C.A. was from Kewaunee, to a bivouac area near Moran, Michigan, a distance of 294 miles. This was an all-night march made in 10 hours 17 minutes running time at an average rate of 28.6 m.p.h. The longest march made by the motorized air corps unit (20 vehicles) was from Muskegon, Michigan, to Scott Field, Illinois, a distance of 486 miles in 14½ hours running time at an average rate of 33.5 m.p.h. The total distance covered was 1,057 miles in 37 hours running time, an average of 28.6 m.p.h.

The general scheme followed throughout the training period was to conduct joint exercises while ground troops were on the march to a new camp site. During the time the joint forces were at any stop-over point, each unit was engaged in its own field training under its own commander.

The 61st completed all its 3-inch antiaircraft gun practices, calibers .30 and .50 machine gun firings and a portion of its antiaircraft searchlight training during the trip, with results shown in the followng tabulation:

Left to Right: Lt. Col. C. B. Meyers, 61st C.A., Commanding Officer of Joint Forces; Major W. C. Goldsborough, A.C., Executive 15th Obs. Sqdn.; Major James D. Brown, 61st C.A., Adjutant; Capt. Frank C. McConnell, 61st C.A., Plans and Training Officer; Lt. D. K. Smith, A.C.-Res., Photographic Officer.

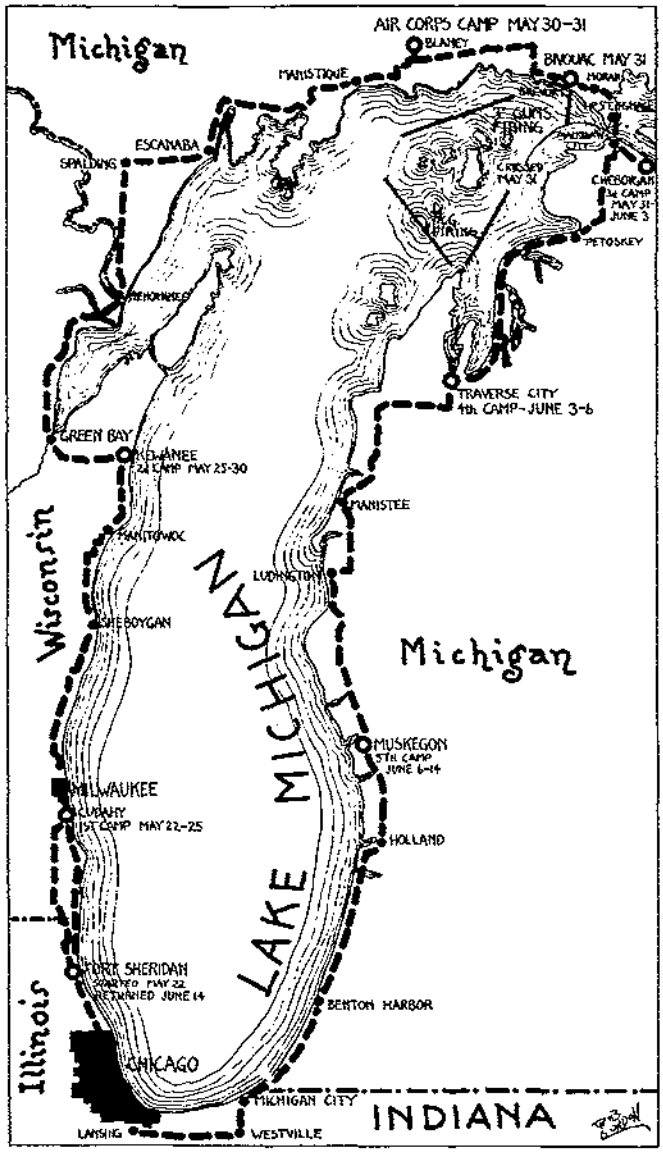

The route of march.

UNIT	CALIBER	DAY—NIGHT	SCORE
Btry. "B"	3" guns	Day	75.09
	(camera deviations)	Day	85.10
		Night	81.30
Btry. "E"	M. G. Cal. 50	Day	116.98
	Cal. 50	Day	168.80
	Cal. 30	Night	96.71
	Cal. 30	Night	117.61

The 15th Observation Squadron completed practically all of its training except that part which involved "blind" flying. Several long distance reconnaissance missions, flying in formation at night, deserve special mention; they were:

Milwaukee, Wisconsin, to Chicago, Illinois.
Muskegon,Michigan, to Detroit, Michigan.
Muskegon, Michigan, to Chicago, Illinois.

The units of the composite force camped together, and the camp was open to the public for inspection. Visitors were welcome and were encouraged to acquaint themselves with the air corps—antiaircraft equipment which in general divided itself into four parts: a motor park, a model pyramidal tent camp, an antiaircraft materiel exhibit and an airplane exhibit. Key men were present during visiting hours to explain the use and operation of each piece of technical apparatus.

At each stop-over point many officers of the National Guard and the Officers Reserve Corps visited the camp and witnessed the training. Among the distinguished visitors were: Major General Frank R. McCoy, Corps Area Commander; Colonel H. T. Burgin; and Lieutenant Colonel O. L. Spiller from the office of the Chief of Coast Artillery. The latter organized the 61st at Fort Monroe in 1924.

Firing points for antiaircraft weapons were available at Milwaukee and Kewaunee, Wisconsin, and at Moran, Traverse City (machine guns only), and Muskegon, Michigan. Landing fields with night-landing equipment existed only at Milwaukee, Wisconsin, and Muskegon, Michigan. Suitable fields for daylight operations existed near all camp sites. In all, about 25 different landing fields were used by the 15th Observation Squadron. Only three days of the 24 were unfavorable for antiaircraft firings or air corps operations because of weather conditions.

The command purchased all rations and supplies locally. Assistance was rendered by the local Chamber of Commerce of each city near which the command camped in order to distribute purchases properly among the local merchants. No difficulty was experienced in securing needed food supplies. The purchase of gasoline and oils along the route worked exceedingly well. Class "A" Agent Finance Officers were appointed for both units of the command. All purchases were paid for before the joint force departed from any stop-over point. Filling station owners, from whom gasoline and oils were purchased, normally were paid when the last vehicle cleared the station.

At each stop-over point representatives of the Chamber of Commerce and other local officials visited the camp. These visits afforded an opportunity for civilians to become better acquainted with the Army. Members of patriotic societies and clubs left no stone unturned to make our stay in each locality most pleasant.

Free transportation across the Straits of Mackinac was furnished by Mr. Murray D. Van Wagoner, State Highway Commissioner of Michigan. It required five round trips to ferry the command across the nine-mile stretch of water. Valuable experience was gained in loading and unloading of antiaircraft vehicles and equipment. Had not this transportation been furnished by the State of Michigan it is doubtful if the command could have completed the trip around the lake.

The general type of exercise was agreed upon by the commanding officers of the two forces and approved by the Commanding General, VI Corps Area, on April 26, 1935. Nine joint exercises were conducted in addition to unit training. In these the 15th Observation Squadron operated about half the time as enemy aircraft. The 61st always played the rôle of the blue force. Due to the fact

that, at the last moment, the 21st Photo Section was detached for other missions, that part of the exercise which contemplated a check of ground orientation by means of aerial photographs had to be eliminated. Likewise, because of absence of lighted airports, exercises involving antiaircraft searchlight defense against incoming bombardment aviation (simulated) also had to be eliminated.

In order that the reader may have a clear conception of the problems involved, the directive for the first exercise is submitted.

HQ. JOINT FORCES
15th Obsn. Sqdn. and 61st C.A. (AA)
Fort Sheridan, Ill.
22 May 1935.
Joint Air Corps—Antiaircraft Exercise.
No 1

15th Obsn. Sqdn. (RED)

Location: At Milwaukee County Airport and any field farther north at 8:00 A.M., 22 May 1935.

Mission: To observe, report, photograph and attack the 61st C.A. (AA) plus 15th Obsn. Sqdn. ground troops attached, reported to be moving overland from Fort Sheridan, Ill. to the Milwaukee County Airport during daylight hours and up to 12:00 M. 22 May 1935. Special mission to attack 3" AA guns and AA Searchlights.

Information: Reds have complete air superiority. See Mission 61st C.A. (AA) below.

GOLDSBOROUGH,
Comdg.

61st C.A. (AA) (BLUE)

Location: Mobilized at Fort Sheridan, Ill, at 8:00 A.M., 22d May, 1935.

Mission: To move overland from Fort Sheridan, Ill., to the Milwaukee County Airport during daylight hours arriving at the north entrance to the Milwaukee County Airport before Noon, 22 May 1935. Every effort to be made to maintain secrecy. AA. MG. defense to be provided while en route.

Information: Reds have complete air superiority. See mission of 15th Obsn. Sqdn. above.

MEYER,
Comdg.

Distribution—21 May to: 1 each officer and N.C.O.
1 each vehicle.

It is desired to point out that in the drafting of the joint exercises brevity was observed and that the distribution included all officers and noncoms. This enabled everyone in the command to know exactly what was going on. In the execution of exercise No. 1 the commanding officer of each opposing force issued dictated orders at 8:00 A.M., May 22, to carry out the mission assigned. These orders were confirmed later by formal field and operation orders. The commanding officer of each unit then observed the execution of the exercise from the air. Immediately after the conclusion of each exercise a critique was held. In joint exercises where the 15th Obsn. Sqdn. and the 61st were opposing forces a decision on controversial questions as to who "won the war" or to assess any damages were carefully avoided. All concerned were well satisfied to secure this practical and valuable training in the field and let the first few months of the next war decide any controversial questions between the Air Corps and antiaircraft artillery.

A special report on the new transportation recently furnished the 61st was forwarded through channels to the Chief of Coast Artillery. Suffice it is to say that a large number of the trucks were not of standard commercial type. Many parts needed for motor repairs could not be purchased locally and had to be ordered direct from the factory at Detroit. This applied particularly to the Dodge truck, 2½ ton (4x2). Not a single repair part needed for this vehicle was on hand at any of the local Dodge dealers, most of them failed to recognize this vehicle as a Chrysler product except by the name on the radiator. Repair parts had to be obtained by air transport from the factory. All Coast Artillery officers of the 61st are convinced that standard commercial vehicles, now in quantity production, if initially selected for the purpose, will adequately answer all antiaircraft needs. Going into the field, with only a money allowance for repair parts and these available only at Detroit, is a mighty poor peacetime set-up. A mobile spare parts storeroom is an expensive arrangement, especially so when there are many different types of non-standard vehicles.

An experimental stove manufactured by the Quartermaster Corps at Jeffersonville, Indiana, was sent to the 61st for field test and report. Two Federal trucks (4x4) constituted the battery kitchen and storeroom. One truck carried this stove, an ice box, a table, a 50-gallon tank of water and the rations for the day; the other truck carried a 250-gallon water tank and additional rations. These two trucks were parked back to back, nine feet apart; the space between was covered with canvas and afforded protection to the personnel in inclement weather when serving meals cafeteria style from a table suspended between the tail gates. The stove used low-test gasoline as a fuel. It was never removed from the truck and functioned satisfactorily during the entire trip. The stove is designed either as a wood or gasoline burner. Since the return of the 61st to Fort Sheridan this stove has undergone certain minor modifications, it is believed that it will now adequately meet all requirements for a 150-man organization.

The total expense of the joint exercise was as follows:

Rental, camp sites	$231.00
Fuel for cooking	120.00
Ice	12.14
Repairs to new motor vehicles	332.00
Gasoline and Lubricants (Air Corps motor vehicles)	288.00
Telephone and telegraph	43.93
TOTAL	$1,027.75

Gasoline and lubricants for the 61st and for the airplanes of the 15th Observation Squadron were covered by annual appropriations for tactical training.

This trip was the first of its kind through Illinois, Wisconsin and Michigan. It is estimated that at the second

night at Milwaukee, over 50,000 civilians visited the Milwaukee County Airport where the command was encamped. On May 26th at Kewaunee, Wisconsin, a small town of 2,500 population, over 25,000 visitors were present at the dedication of the new airport by the 15th Observation Squadron. Likewise at Cheboygan, Traverse City, and Muskegon, Michigan, very large assemblages visited the camp grounds and the firing points, to witness antiaircraft firings and searchlight work. Air Corps training was witnessed by thousands of civilians from their front porches.

The use of state road maps was absolutely necessary. The lack of accurate and reliable maps of this area clearly demonstrated that practical field training is much different from the training secured at schools where the Gettysburg and Leavenworth maps are available.

During the entire trip not a single complaint was received from operators of civilian motor cars relative to interference with civilian traffic. In movement on the road the minimum distance between vehicles was the distance between telegraph poles. Fast moving civilian cars had no difficulty in passing the convoy. Convoy regulations for peace-time operations should be modified by increasing normal distance between vehicles to meet civilian motor traffic needs.

From a compilation as of July 15, the following percentage of officers and men of the 61st have not yet had an opportunity of seeing the following types of modern airplanes:

TYPE OF PLANE	Per cent who have not yet seen such a plane.
Observation, O-43, or O-46	85.0%
Attack, A-1-12	99.7%
Bomber, B-10 or B-12	91.0%
Pursuit, P-26 or A or B	82.0%

From the above percentages, it can be seen that the geographical location of antiaircraft regiments and their relative locations to Air Corps stations causes "Identification of Aircraft" to continue to be more or less a theoretical winter season study. At least once each year, preferably while in the field, it is believed that the personnel of all antiaircraft regiments are entitled to see and receive practical instruction on each type of modern airplane. Exercises in the field is the place where this instruction best can be imparted. Joint air corps—antiaircraft exercises are required by existing orders, to be held annually. The present organization of an antiaircraft regiment does not lend itself to tactical training in the field, for the reason that units organized as the 61st are but a skeleton of a real mobile antiaircraft regiment.

The following is a brief summary of important factors which should receive consideration in planning future joint exercises:

1. You cannot satisfactorily conduct antiaircraft tactical training in the field with an organization such as the 61st where TEN out of the FOURTEEN organizations which comprise the regiment are INACTIVE. The limit of satisfactory training, due to present faulty organization, is battery training.

2. Practical instruction on each type of modern airplane should be imparted to all antiaircraft personnel during joint exercises. Towing planes and planes used in searchlight training should closely approximate the speeds of the modern bomber.

3. Future motor vehicles supplied to antiaircraft regiments should be commercial vehicles selected to best meet our antiaircraft needs and should be standard manufacture now in quantity production.

4. Short wave radio, similar to police radio systems now operating most satisfactorily in civil life, should be furnished for use on convoy work to supplant the telephone lines of a searchlight battery.

5. Passenger cars in sufficient quantity should be furnished antiaircraft regiments. Replacements of motorcycles by passenger cars should be considered.

6. Future target practices should be conducted under field conditions and not under a fixed set-up at home stations.

7. A photo section should be a part of the Air Corps when engaged in joint exercises.

8. Stop-over points in joint exercises should be at places where night lighted airports are available.

9. Joint exercises between air corps and antiaircraft units such as the one under discussion brings these two combatant arms into closer contact thus creating more cordial relations, mutual respect and a better understanding of each others powers and limitations.

THE YEARS OF DISCUSSIONS ON *the reduction of armaments have only produced more talk of war, more anxiety lest the fifteen years peace since the Great War should be broken, than could conceivably have occurred if there had been no such intensive comparison of weapons.*—JOURNAL OF THE ROYAL UNITED SERVICE INSTITUTION.

Leavenworth or Bust

By Colonel Rowan P. Lemly
Infantry

I know of no other profession wherein a man's career can be so teetotally damned because of bygone history as it can in the military.

In most branches of the service the selection of Leavenworth candidates is based squarely on efficiency reports. To a considerable number of capable and ambitious officers the result of the selective process is the worst pain in the neck since prohibition, but we can't get away from it. And the more we gripe about it the more we are told it's the fairest system, bar none, that can be devised.

But is it?

Like an old hat, Form No. 67 (Efficiency Report) has been kicked around a lot. But damn it as we may, it's the best we've got, or ever had. In spite of its inherent limitations as an accurate yardstick of an officer's true capabilities, its use for relative comparisons would seem to be the only basis of selection that can be reduced to any real degree of precision. At least it may be used as an effective silencer for the protests of disappointed Leavenworth aspirants.

I do not object to the *fact* of its use, but I most decidedly question the *manner* of its use.

In the great game of horse-racing, that king of sports (and rackets), an animal that is notably a slow starter is not necessarily an also-ran at the finish. I am told that some of the most prominent stake winners in the country naturally start slowly, and run better well back for the first few furlongs. They then gradually improve their positions, and finally come through in the money on the drive down the stretch. By the same token, all officers do not develop uniformly in service. Some take hold with remarkable alacrity. Others develop slowly, and the formative period of their careers extends over a longer period of time.

Now the point I make is that to compute an officer's eligibility for selection to Leavenworth on *all* his efficiency ratings *from date of commission* does not secure the most deserving candidates. We should not judge the slow starter on those formative years of his career when he probably made mistakes a-plenty. Those years constitute his trial shots, and should not be counted for record. Neither should the youngster who starts off with perfect scores (superiors), and then decides to rest on his laurels, or for other reasons drops down to marksman, be given credit for his trial shots in computing his score for selection to Leavenworth. We are not interested in how good he used to be. What we are vitally concerned with is how good he is *now*. As he gained in experience, did he develop and broaden in professional knowledge, in judgment, in common sense, in initiative and in leadership? We don't care how well he performed his duties as a second lieutenant in the capacity of aide, platoon commander, officer of the guard, secretary of the club, or as mess officer. We want to know, if in his more mature recent years he has evidenced those qualities which will make him worth educating for high command and staff duty.

With a view to adjusting our system to provide for the selection of our best prospects *at the time of selection*, I offer the amendment that only the last 50% of an officer's record be counted in considering his qualifications for the Command & General Staff School.

The chart reproduced with this article represents graphically the efficiency ratings of two officers for a period of twenty years of commissioned service. *A* is the slow starter who after his seventh year begins to find himself, improves, and eventually reaches and maintains a superior rating. *B* is the young man who takes hold with alacrity, acquires a nice string of superior reports and then begins to slump. Perhaps he lacks initiative or the ability to meet the greater responsibilities that come with years of service. At any rate he reaches the level of his true worth as a mature officer—somewhere between excellent and satisfactory. For their total commissioned service each of these officers has the identical efficiency rating—87.85%, but is there any doubt which should go to Leavenworth?

Even under the present system, *A* would probably be given the assignment over *B* if the matter came up for decision in the twentieth year of their service, but what would be the result if the selection were being made after the fourteenth year? Based on their efficiency ratings since commission, *A's* percentage is only 84 while *B's* is 91.7. *B* wins and gets the detail hands down, in spite of a consistently negative curve since his seventh year, and in spite of *A's* consistently positive curve since his third year!

No such manifest slighting of superior merit would occur if only the efficiency ratings for the last half of the commissioned service of the competitors be counted. Under this procedure *A's* average is 91.5% while *B's* is 86.67%. *A* would be selected and justice would prevail.

Why should the stuffed shirts who have been found out, and those officers who have not been able to rise above mediocrity after reaching an age and grade at which they should be at their best, be given any consideration for selection to Leavenworth?

Thank heaven I completed the service schools many years ago—perhaps before I was found out! Furthermore, I've too many troubles of my own to be bothered

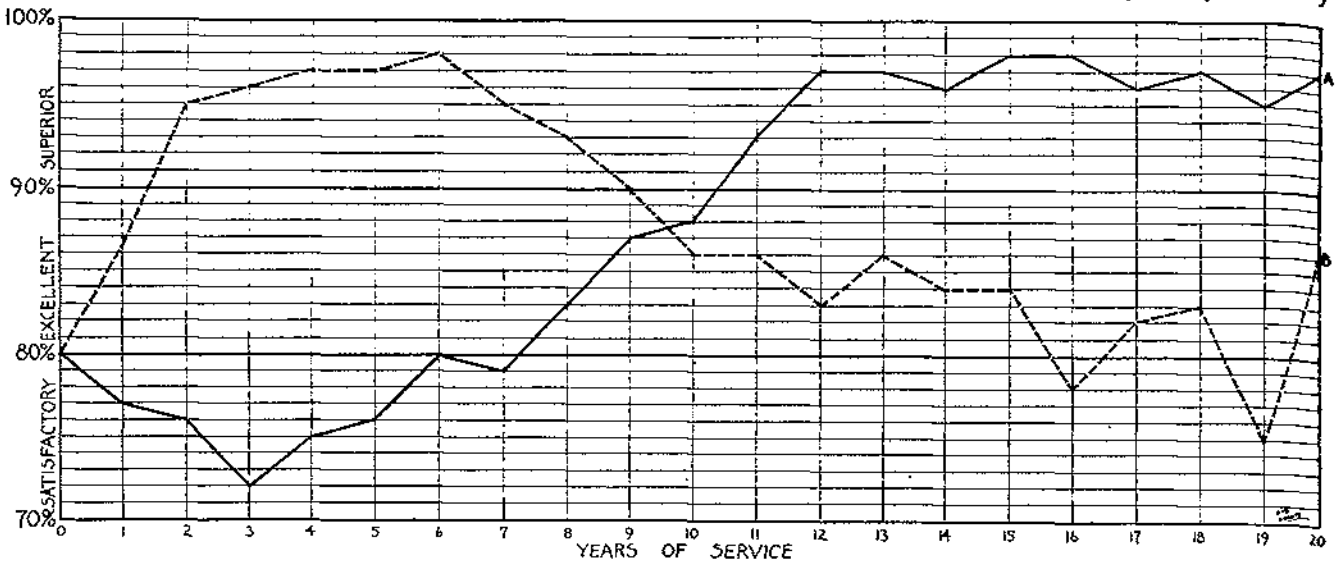

METHOD OF CALCULATING RELATIVE STANDING OF A AND B

Headings on Form No. 67 (Efficiency Report) are given numerical maximum values in accord with their relative importance. A and B receive proportions of those maximum values for each heading. The sum total of values assigned A and B is a proportion of the whole number of points attainable on an efficiency report, and is then reduced to a percentage basis. A's or B's rating for any year is the average of all efficiency ratings for that year (exclusive of abbreviated reports). A's or B's rating for a stated number of years is the average of their annual ratings for the stated number of years.

Thus, A and B each averaged 87.85% for twenty years' service. For fourteen years' service A's average is 84% and B's average is 91.7%. For the period beginning with the seventh and ending with the fourteenth year A's average is 91.5% while B's average is 86.67%.

with other people's difficulties. But no human who believes in justice can fail to see the iniquitous effects on the morale of officers who struggle under a policy which fails to do what it purports to do. When examples come to one's personal knowledge they are impressed upon the mind despite any effort to be impersonal. I have in thought the cases of two exceptionally efficient officers who have been consistently passed over for selection to Leavenworth. They are now rapidly reaching the age limit that will make them ineligible. Each commanded a war-strength company in my battalion for three years. They both performed their duties in an outstandingly efficient manner. In a regiment where the competitive spirit was uppermost and where inspections, demonstrations, and tactical exercises afforded a constant measure of the individual officer's capabilities, these two were eminently superior. Their combined qualities of attention to duty, initiative, judgment, common sense, professional knowledge, leadership, and tactical acumen were an unending source of comfort to the battalion commander. He knew he could always count on this pair.

I have no doubt that under the existing policy these two officers are not entitled to be selected. Somewhere in their past a few skeletons are probably rattling around in closets and in the annual scramble for Leavenworth these pop out in the form of mediocre efficiency reports. Even the excellence of their records in recent years cannot overcome the set-back of these skeletons when the average of *all* their efficiency reports is taken into account. The morale of both these highly ambitious officers is being shattered. However, in spite of heavy hearts, they are officers who say nothing, chop wood and watch the chips fly. I can only hope they pile up enough chips in the remaining few years of eligibility to be selected. Otherwise the Infantry may lose the active services of two exceptionally valuable officers. Under the policy of considering the efficiency records for only the last 50% of an officer's service I am reasonably certain that both of these officers would have been selected. I cannot believe that these are two isolated cases which prove the exception to the rule.

I know of no other profession wherein a man's career can be so teetotally damned because of bygone history as it can in the military. Business managers in the world today are too occupied evaluating a man's worth in terms of dollars and cents to care what he used to be. I do not refer to blots on an officer's record that affect his integrity. I speak of those youthful indiscretions or acts of carelessness or omission that may have been committed at the age and rank when the proverbial post dog mistook his leg for a lamp-post! Witness some of the matters that have come to light under the microscopic inspection of Class B boards—incidents twenty years old—in some cases incidents for which those officers were disciplined and paid the full penalty at the time they occurred.

Still another factor remains. Rightly or wrongly the impression persists among many officers that often the higher efficiency ratings are the product of "being close to the Old Man." Human nature does not change. A commander selects his aides and his staff officers not only from those in whose capabilities he has confidence but also from those whose personalities appeal. The very inti-

macy of their official relations brings them closer together personally. It is only natural that the "Old Man" is influenced in their favor when efficiency ratings are made up and when "plums" are passed out. How can this human instinct be overcome? How can others not so well favored in "plums" and who have not been so extravagantly rated, get the opportunity to prove their worth? I see only one possible solution. Some consideration is due efficiency records. With this in mind, select from all officers who are otherwise eligible (age in grade, etc.) those whose efficiency ratings are in the upper bracket in the last half of their commissioned service (excellent or better). Then in each arm and service require candidates to submit to a competitive examination.

Take the Infantry for instance. The examination would be prepared at Fort Benning—not one of those textbook "fly specking" examinations, but about three good stiff map problems of a tactical nature—with no hidden "niggers in the wood pile." The Chief's office would assign each candidate a number and forward the examination to candidates through corps area headquarters. These examinations would take place with all the customary regulation and prohibitions as to secrecy and unauthorized assistance that characterize competitive examination for West Point candidates. The solutions, numbered only, would be returned to the Chief's office, and from there be forwarded to Benning to be graded. The Infantry School would return but one document to the Chief's office—a list of percentage grades arranged in order of standing with the students' numbers opposite their respective grades. *And that order of selection would be the last word.*

A lot of work, some people will say. Surely, particularly for the examining board at Benning—but they are used to it! In my opinion the elimination of the chronic dissatisfaction that now exists is well worth any labor that might be involved. Others will contend that one examination consisting of three map problems is not conclusive evidence of the relative capabilities of candidates. Possibly not, but it is a whale of a lot more illuminating than the present policy. One thing is certain, all this loose talk about ex-aides and staff officers composing the majority of the classes at Leavenworth would come to a halt. If there's any truth in it, these individuals would be most effectually put on the spot. The officer who went would have the satisfaction of knowing that a relatively high efficiency rating placed him in the group of candidates, and that a final competitive examination placed him on the list of those selected.

Finally, if a candidate's grades on examination failed to place him in the upper bracket for two or three successive years, he would have very little cause to bellyache if he were dropped from further consideration. He might bore his friends with his alibis over the club bar, but he wouldn't elicit many tears of compassion.

I believe that this procedure, if adopted and scrupulously carried out, would reduce possible and probable injustices to the minimum. In the racing game, the pari-mutuel machines which superseded the old "bookie" reduced the question of correct odds on horses in a race to mathematical precision. Of course we can never arrive at any such exactness in dealing with the human element and relative values of efficiency reports, but we can more nearly approach it than we do. Carrying the analogy further, the officer candidates are the horses in the "Leavenworth Stakes" and the race is the competitive examination. If a horse race is honestly run, the best horse wins. By the same token the best equipped candidates will excel in the examination. And when the horses trot back to the judges' stand there will be no cries of "Foul!"

Target Practice Under Gas

By Major L. D. Farnsworth, C.A.C.

On request of Lieutenant Colonel Clifton Irwin, commanding 249th C.A. (HD), Oregon N. G., this regiment was authorized to fire one service practice during 1935 under conditions that might be expected during war. Battery "D," manning 10" D. C. guns, was designated to conduct the firing; this battery having had a string of five excellent practices during as many years.

Conditions for Firing

Before Battery "D" was designated for this demonstration it and three other batteries of the regiment were advised to be prepared to fire their 1935 practice under unusual and adverse conditions. This placed these batteries "on their mettle" to meet the unexpected. Stress was laid on discipline and steadiness. Plans were made to meet all unusual conditions that could be anticipated. All batteries reacted favorably and with keenness. Batteries not selected were disappointed in not being picked for the test. When it was announced that Battery "D" would fire under gas, no information was given as to when or how the gas would be released or if it would be combined with any other unusual condition. Rumors purposely were started implying that there might be an air attack; also that personnel shifts might be necessary, even to include the battery commander.

Training

Standard masks were issued about three months prior to going to camp, but optical and diaphragm masks were

not made available until arrival at camp. In addition to the regular artillery and close order drill at the armory the battery personnel was given a progressive and thorough training in the use of the mask; this included passing through a gas chamber to gain confidence in the mask and lose all fear of the gas. In the final stages of armory training short hikes and artillery drill were conducted in masks. After arrival at camp the personnel of Battery "D" wore gas masks at all artillery formations, including the 1½ mile hike to and from the emplacement. This resulted in a thorough familiarity with and confidence in the mask and a determination instilled in each man to concentrate on his particular function during practice, no matter what happened in the emplacement.

Equipment

The mask for Gun Pointers consisted of a special optical mask with canister at nape of neck. Eyepieces about one inch in diameter; plane of eyepieces normal to line of sight; adjustable laterally to fit width between wearer's eyes.

Difficulties—narrow field of vision when not using telescope.

All personnel giving commands or transmitting data were equipped with a diaphragm mask. Transmission of messages by telephones was satisfactory when a modulated tone of voice was used. Transmission through voice tubes difficult—sound muffled.[1]

Gas Sentries

Gas sentries stationed in emplacement or near by were equipped with standard masks and claxon horns. Sentries were specially trained to detect gas.[2]

Safety officers were equipped with a special sound producing device.

Conduct of Practice

Held on 10 inch D.C. guns. Smoke was released after the first trial shot (moving target). Smoke did not bring a gas alarm and no masks were put on. Gas was released immediately after the first record shot.

The following is quoted from a report made by the Chemical Officer, IX Corps Area:

> *a.* "Three smoke candles were ignited prior to the release of the tear gas in order to provide a realistic situation; this smoke was almost entirely dissipated before record firing commenced. The tear gas was maintained throughout the firing on the entire crew, including the plotting room and B. C. Station.
>
> *b.* "Twelve tear gas (CN) grenades and six (CN) candles were used, thus providing a strong concentration of gas throughout the emplacement. Grenades and candles were set off at about two-minute intervals to reinforce the concentration. The wind was favorable so that tear gas in the emplacement was blown away very slowly. The concentration was strong enough to sting the exposed skin. Gas masks were promptly adjusted at the alarm, which was sounded as soon as the tear gas was felt by the gas sentry. Masks were worn by all members of the crew during the entire record firing.
>
> *c.* "It was reported by members of the crew that the gas masks functioned very well and tear gas did not reach the eyes.
>
> *d.* "The gun commander reported that loading was slowed up by from 10 to 20 per cent but that breathing was quite comfortable.
>
> *e.* "The diaphragm mask functioned satisfactorily except that in transmission of data over the voice tube the words were sometimes indistinct and had to be repeated.
>
> *f.* "The optical mask used by the gun pointer was very good except that he had difficulty in watching the splash after firing.
>
> "I consider the gas discipline of Battery D, 249th Coast Artillery, in this service firing to have been excellent. Their morale throughout was high. The adjustment of masks was excellent considering the limited amount of training in gas defense which is possible for units of the National Guard."

The following is quoted from the report of the Camp Inspection Board:

> "The only difficulty which developed was in the transmission of data from the plotting room to the emplacement by voice tube, this method of communication proved unsatisfactory when using diaphragm gas mask due to the vibrations emanating from it being damped by the column of air in the tube. It is suggested that in future practices of this nature the data be transmitted mechanically or that a loud speaker system be used.
>
> "In the opinion of the Board, the masking of the plotting room personnel does not interfere with their efficiency, and is in many ways preferable to gas-proofing the plotting room."

Comments

Practice was carried out without excitement or confusion. Some delay was experienced because of the necessity of repeating data received over voice tubes. During practice, sounds emanating from the gun emplacement reminded me of a bullfrog pond due to the action of flutter valves under labored breathing of gun crew.

The score of this practice was 70% of the average score of Battery "D" during the previous five years, which uniformly had been excellent. The average time per shot was 66 seconds, as compared to 53 seconds the previous year. The difference in time and score can be charged in part to the difficulty of transmitting data over voice tubes.

After the last shot, the gun crew was marched to a position windward, of gassed area and masks were removed. Men were inspected and questioned. The reaction was that during firing they did not realize they were wearing a mask or that gas was being used, their attention being concentrated on their duty. It was noted that respiration was slightly above normal accompanied by profuse perspiration. After removal of masks, gas adhering to the clothing affected their eyes.

From this experiment it is believed that seacoast guns can be served rapidly and effectively under a gas concentration with the personnel in gas masks. The rate of fire would be reduced and periods of sustained fire would have to be shortened.

---

[1] Battery had trained gun crew to use hand signals to supplement oral signals in service of the piece.

[2] Battery was trained on procedure to follow in case gas alarm was sounded during a critical operation as carrying out powder or ramming a projectile.

Antiaircraft Intelligence Service

By Captain Robert W. Berry and Lieutenant John A. Sawyer, C.A.C.

FEW opportunities have been presented since the war to observe the operation of the intelligence system required by an antiaircraft artillery command engaged in a rear area defense. By describing the system developed by one regiment of Coast Artillery during several maneuvers, it is hoped that interest in this subject will be stimulated.

The mission assigned to the AAIS of this regiment is threefold: first, to collect; second, to evaluate; and third, to disseminate all air intelligence.

To accomplish the first part of this mission a central agency is maintained which has direct connection with all available sources of air intelligence. Reports from the "Off-shore" and "In-shore" patrols are received by printer telegraph from the radio receiving station; reports from the regimental land observation posts are received over direct telephone lines; reports from higher headquarters are received by telegraph; reports from the air fields are received over direct telephone lines; and reports from regimental units are received over tactical telephone lines. With this mass of data coming in, it is obvious that a well trained message center personnel is essential. Regimental communication drills, using a miniature set-up, are held throughout the year to provide the necessary training.

The evaluation of the intelligence reports received is an extremely important function, requiring sound tactical judgment. Reports received are in the form of "Flash" messages and evaluation consists of weeding out duplicate reports, reports which are too late to be of value, reports which are evidently in error, and reports of no tactical value. The time allowed for this evaluation must be reduced to a minimum so as not to delay the transmission of important information. For this reason, an officer is assigned to this duty. Each message passes through his hands, and he must decide at a glance whether to order it transmitted or filed.

To perform the third part of the mission properly, all units must receive the intelligence reports without delays, repeats or relays. This is accomplished by using a wire broadcast system and a commercial radio broadcasting system. Some detached units cannot be reached by wire, therefore they are provided with commercial radio receiving sets. This enables them to receive the same intelligence reports as the units connected to the wire broadcast. The radio also serves as an alternate means of communication in case of wire failure. If all units could be equipped with radio receiving sets, a commercial broadcasting station might well be used as the principal means of disseminating air intelligence.

Broadcasting by radio, of course, makes the intelligence reports available to the enemy as well as to our own units; but due to the high speed of an airplane, flash messages lose their tactical value very soon after they are transmitted. If the attacking planes pick up the messages, they may know that they have been reported and that they have lost the element of surprise. This will have considerable moral effect and may result in the attack not being pushed home. Commercial broadcasting stations will be available under service conditions whenever the defense is in the vicinity of a relatively large city. For these reasons the use of such stations in connection with the antiaircraft intelligence service is tactically sound.

It should be noted that in this system information flows from all sources to one central agency and from that agency to all units. This is a departure from the normal system where information tends to flow from subordinate to higher units. The change decreases the time required to disseminate information and is a direct result of the use of the wire broadcast system.

The apparatus used in the wire broadcast system consists of a microphone amplifier, several line amplifiers, and a number of type P-11 headsets. A howler, with its

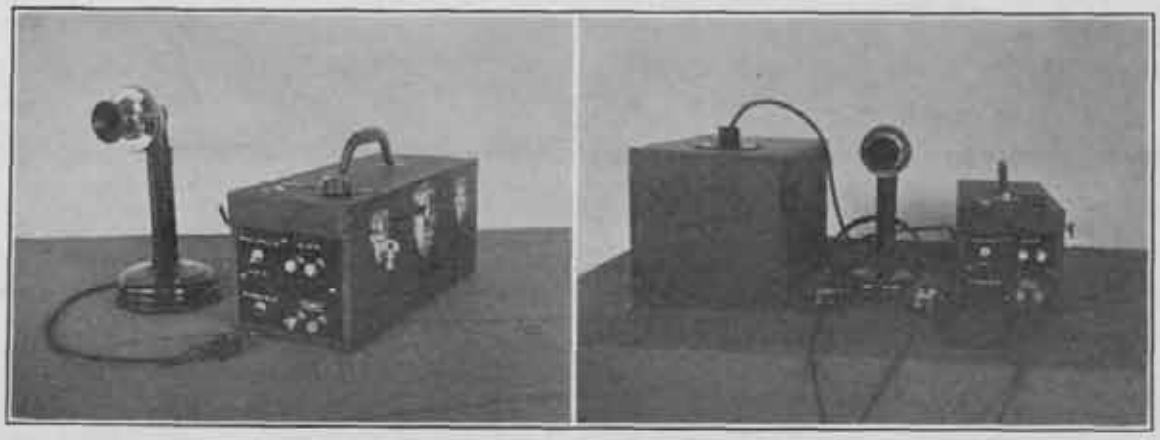

Figure 6

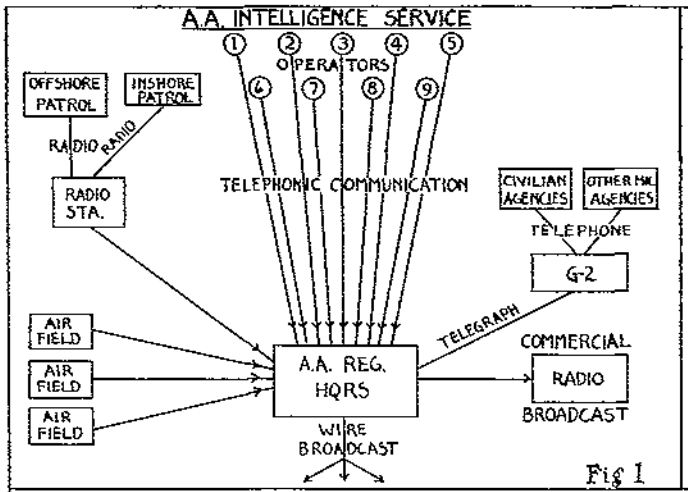

Fig 1

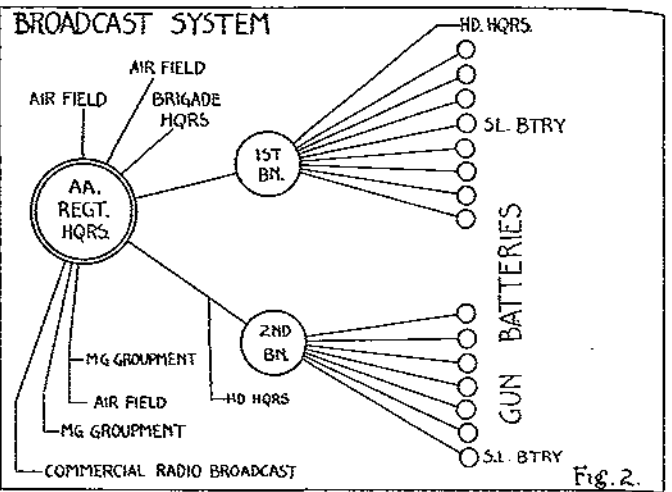

Fig. 2.

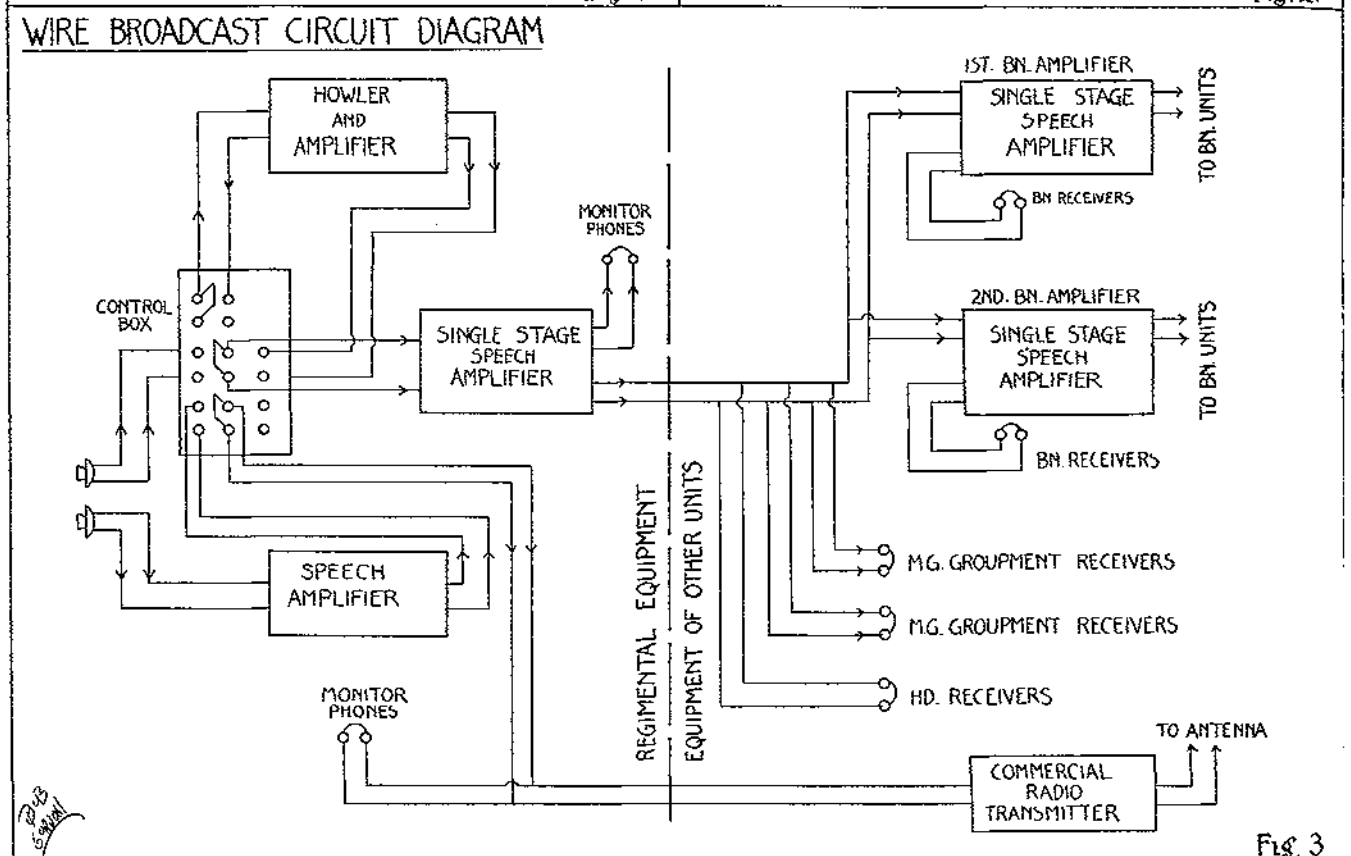

Fig. 3

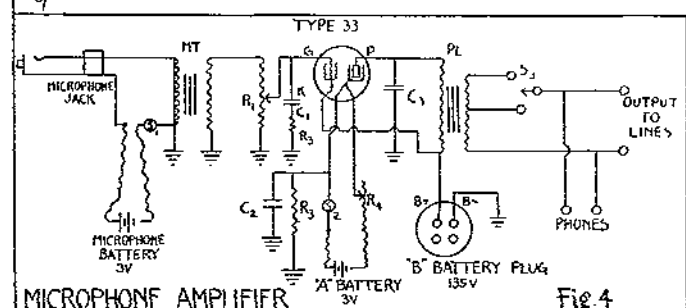

MICROPHONE AMPLIFIER

Fig. 4

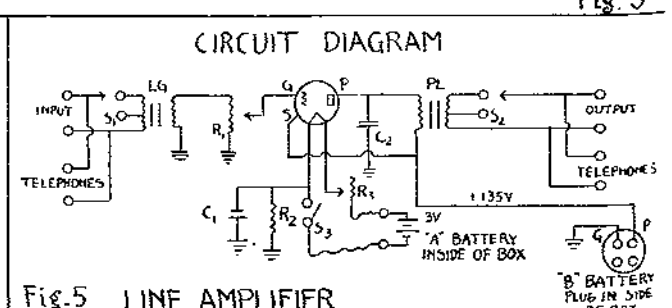

Fig. 5 LINE AMPLIFIER

R_1 = 150,000 ~ VOLUME CONTROL
R_2 = 8,000 ~
R_3 = 750 ~
C_1 = .005 MF
C_2 = 5 MF
C_3 = .003 MF
S_1 = MICROPHONE SWITCH
S_2 = FILAMENT SWITCH
S_3 = IMPEDENCE CHANGING SWITCH
MT = MICROPHONE TRANSFORMER
PL = PLATE TO LINE TRANSFORMER

INSTRUCTIONS

TO OPERATE:
1. TURN MICROPHONE AND FILAMENT SWITCHES TO "ON"
2. USING BLACK KNOB ON SUB PANEL, ADJUST FILAMENT GLOW TO A DULL RED JUST VISABLE IN DARKNESS
3. CONTROL VOLUME AT OUTPUT USING KNOB ON TOP OF BOX

TO TURN OFF: TURN MICROPHONE AND FILAMENT SWITCHES TO "OFF"

R_1 = 150,000 ~ VOLUME
R_2 = 750 ~
R_3 = 6 ~ FILAMENT CONTROL
C_1 = 5 MF
C_2 = .003 MF
$S_1 S_2$ = IMPEDENCE CHANGING SWITCHES
S_3 = FILAMENT CONTROL
LG = LINE TO GRID TRANSFORMER
PL = PLATE TO LINE TRANSFORMER

INSTRUCTIONS

TO OPERATE:
1. TURN SWITCH ON TOP OF BOX TO "ON" POSITION
2. USING BLACK KNOB ON SUB PANEL, ADJUST FILAMENT GLOW TO A DULL RED JUST VISABLE IN DARKNESS
3. CONTROL VOLUME AT OUTPUT BY KNOB ON TOP OF BOX

TO TURN OFF: TURN SWITCH ON TOP OF BOX TO "OFF" POSITION

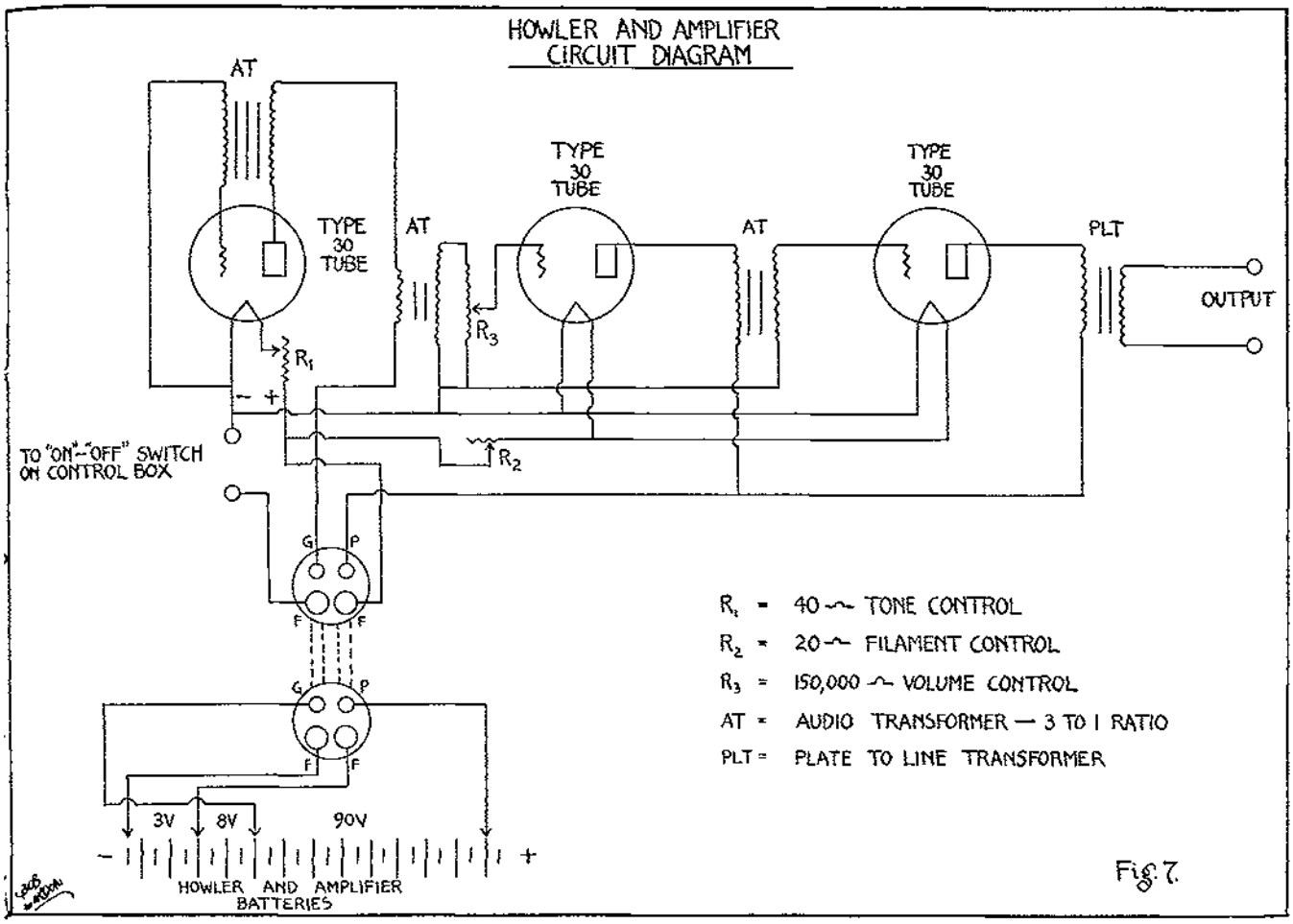

Fig. 7.

amplifier, is employed to warn all units of an impending broadcast. A control box is used to provide the necessary switching arrangements. The wiring diagram is shown in Figure 3.

The microphone amplifier (Figure 4) is a single tube, battery operated, speech amplifier employing a two-volt tube of the thirty series. The very low current consumption of these tubes permits the use of a minimum number of dry batteries. A single button carbon microphone of the standard desk type, with the hook removed, excites the amplifier. The output transformer is wound to match a line of either 200 or 500 ohm impedance.

Except for the input elements, the line amplifiers (Figure 5) are like the microphone amplifier in construction and electrical design. Since the impedance of their input circuits must match the 200 or 500 ohm line for maximum power transfer, a line to grid matching transformer is employed in each. This replaces the microphone input circuit of the microphone amplifier; in other respects the two amplifiers are similar.

Figure 6 is an exterior view of the microphone amplifier. It should be noted that all controls and binding posts to connect and operate the amplifier are on the outside of the box. The "B" batteries, due to their bulk, are contained in a separate box, connected to the amplifier by a cable with plug attachments to avoid the possibility of wrong connections.

The P-11 headsets need no description since they are standard army equipment. The fact that they are of high resistance (2500 ohms), however, is of the utmost importance. Ordinary telephone headsets of 80 or 160 ohm resistance, if used, will reduce the volume of the broadcast in proportion to the number used, and tremendously decrease the audibility.

The howler is an audio oscillator of the Hartley type. Its output is stepped up by a two-stage audio amplifier. Figure 7 shows details of the howler and amplifier circuits. A control box contains the necessary toggle switches to operate the system.

The intelligence broadcast by commercial radio is sent over standard remote control equipment shown schematically in part of Figure 3. The microphone used for this purpose is placed as close as possible to that of the wire broadcast system; thus information may be broadcast simultaneously by wire and radio.

The use of the wire broadcast system permits the maximum amount of rest for units in the field. During "Rest" or "In-readiness" periods, the headsets over which the broadcast is received are not required to be worn. The only personnel on duty during these periods are the switchboard operators. The headsets are kept in the immediate vicinity of these operators. When the regimental commander decides that an attack is about to be made, he commands "Alert." At this command, the regi-

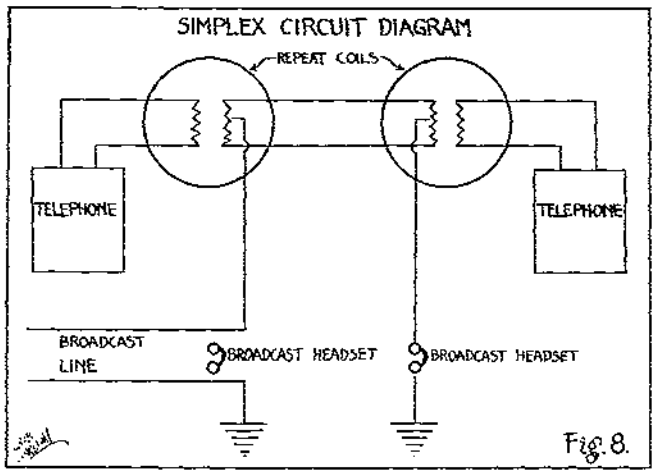

Fig. 8.

mental operator of the wire broadcast, switches on the "howler," this sends a high frequency note over the lines and causes the headsets to "howl" so that the sound can be heard clearly at distances up to fifteen or twenty feet.

When this signal ceases, all operators put on the headsets and receive the command "Alert." During "alert" periods, the headsets are worn continuously so that intelligence can be sent and received at any time. In order to conserve the batteries of the line amplifier, power is shut off during the "Rest" or "In-readiness" periods. This normally would stop the howler signal and prevent its reaching lower units. When the switch is thrown to cut off the power, it automatically cuts in a line bridged across the amplifier. It is readily seen that this system allows all but one man in each unit to be resting, except when an attack is actually expected. This would be a very important consideration during extended operations. It also allows the commanding officer to make the decision as to whether a real attack is coming or whether merely harassing action is intended.

During maneuvers when this wire broadcast was under test, many interesting features developed; some of these are:

a. When the number of headsets across a line increases to a point where their combined impedance drops below that of the line, a considerable loss in volume will result. To avoid this loss an additional amplifier is installed at a convenient C.P. or switchboard, its input connected to the trunk line, and its output to the branch lines. The resulting set-up reduces the required power output of amplifiers on the truck line, and better equalizes the power distribution over the whole system.

b. The system was operated over a net composed of more than 100 miles of field wire and cable. Using the microphone amplifier and two-line amplifiers the volume and clarity of reception was reported as exceptionally good by all units.

c. The announcer at the microphone is trained to transmit messages slowly, distinctly, and in a low tone. Under operating conditions, he cannot be heard speaking into the microphone when the listener is more than ten feet from the message center tables. This helps materially in maintaining a quiet, orderly message center.

d. Although this regiment has supplied the wire broadcast only to its own units and the Harbor Defense Headquarters, extension of the system to command posts of other branches of the service, or civilian agencies is merely a matter of adding amplifiers at proper points in the system. Lack of sufficient funds is the present drawback to such an extension, although the cost of the extra equipment is nominal. The line amplifiers can be produced commercially for less than $10.00.

e. The entire system, both radio and wire broadcast, allows one-way transmission only. However, with tactical lines available, frequent checks can be made, which insure proper reception by all units.

f. When a separate line is not available to carry the broadcast to any unit, it is possible to use a simplexed circuit. If sufficient repeat coils are available, the amount of extra wire required by the system can be reduced to a negligible amount. Figure 8 shows how the broadcast line may be simplexed on a telephone line. Cross talk may be expected on simplexed circuits unless great care is exercised to obtain perfect balance, but this is not particularly objectionable. The power of the broadcast will insure that the intelligence message is received, and when intelligence messages are being received, routine messages can wait.

g. Flash messages sent out by regimental observation posts and relayed through the regimental message center, over the broadcast system, are received by all units less than two minutes after the planes were sighted by the observation post.

h. The intelligence system described is applicable to any stabilized situation such as a rear area or coastal defense.

i. The number of units receiving the broadcast can be increased to an almost unlimited extent by the use of additional amplifiers.

j. Positions may be changed with ease due to the simplicity of the receiving apparatus.

k. The length of lines does not affect the reception because the volume can be controlled.

l. The system is not as vulnerable as a normal telephone net because the amplifiers have sufficient power to transmit through partial faults which would destroy telephone communication.

Because the system described has accomplished its mission under test and because we consider it tactically sound and mechanically workable, we recommend it as a basis for further study and consideration.

New Type Testing for Gunners' Examinations

By Lieutenant Peter E. Donnelly, 243d C.A. (HD)

THE use of new style written tests in place of the old oral method of examining candidates for gunners' ratings in the National Guard has definitely passed the experimental stage. These tests came into being as an attempt to fill a long-felt need for a better means of conducting an examination.

The first crude efforts in this field, made in 1932 by the author in collaboration with Captain Walter F. Parker, 243d C.A. (HD), have been perfected, and complete examinations, in mimeograph form, are being used in this regiment and also in the 241st C.A., Mass. N.G., with such a marked degree of success that a return to the oral examination, with its subjective, hit-or-miss judgments and its manifest unfairness would appeal to the officers of these regiments about as much as a return to the days of the muzzle-loading cannon. Not only is the testing fairer and more nearly accurate, but the instruction in gunnery has also shown a considerable improvement. The Regular Army instructors of both of these units have expressed themselves as being decidedly in favor of this type of examination.

The mimeographing of these tests requires a tremendous amount of work, and the diagrams are not always entirely legible. However, we who have thus far carried the burden of the work are to be relieved by the efforts of the Coast Artillery Journal, which is sponsoring a printed form of the test to be ready for distribution, at a nominal cost, in time for the spring examinations. These tests will be produced in pamphlet form, one each for first-class and second-class gunner. Each pamphlet fully covers the examination of one candidate on a 6", 155 mm., 10", or 12" gun and 12" mortar for the rating desired.

The question most frequently raised about these examinations is with reference to the method of preventing wholesale "cribbing" unless tests are published twice a year, which, of course, is not feasible. The solution of this problem is not difficult. The gunners' manuals contain all of the information required of the candidates in catechism form. The questions of the examination will not deviate from the manual, and in many cases, the exact wording will be used. Three forms of this examination will be prepared for both first- and second-class gunners, these will be designated Form "A," "B," or "C." Each form will contain questions on all of the important items but the wording and the order in which the questions are asked will be different. Together the three forms will cover all of the information that a candidate is required to know. To prevent cribbing it will only be necessary for the Regimental Commander to keep secret which of the forms he is ordering for a particular examination.

The examinations will be sold only to the proper authorities, but there would be no objection if a battery officer did procure copies of all three tests and taught them to his candidates. He would then have them do four times as much work. In addition to the correct answer to each question, the candidate would have to learn three incorrect answers, and undoubtedly much better results would be obtained by limiting the instruction to the correct answers, as found in the gunners' manuals.

If copies of all three tests were kept on hand at regimental headquarters, examinations could be given as often as desired, and the papers may be corrected at the convenience of the examining board or by any officer or enlisted man detailed for this duty. At a later time a key will be supplied for absolutely objective scoring.

Another plan, which will function very well in regiments where the units are widely scattered, is to send to the battery commander a set of tests which he will open in the presence of the candidates at the designated time and place. He would then conduct the test and return the papers to headquarters to be corrected, accompanied by a certificate to the effect that the examinations were given under proper supervision and that the men received no unauthorized aid.

The present policy in the 243d is to have the testing conducted by the Battalion Commander and his Adjutant. These two officers are able, in the course of one visit, to test all of the candidates, including experts, and, in addition, to find time to check on a number of items of battery administration and training.

In the larger armories two officers can supervise the examination of any number of first- and second-class candidates. This can be done without any of the strain, hurry or confusion of the old oral system; also any men not taking examinations at that particular time are able to proceed with their regular program of training under the supervision of their officers.

These examinations are designed especially for the National Guard. In the Regular Army all of the candidates are to be found in one place. All necessary equipment and matériel is close at hand and plenty of time is available for the examinations. However, even under these advantageous conditions, the subjective elements inherent in the oral examination are bound to affect its efficiency. The examining officer's guess will be more accurate because he has more time for questioning, but he will be an unusual person if he is able to keep out of his calculations every consideration except the candi-

date's knowledge of artillery. In spite of himself, an officer's judgment is warped, either favorably or unfavorably, by a man's soldierly appearance, the fit of his uniform, personal feelings toward the man or his battery, the fact that the candidate needs the rating for promotion or to hold his rank, and many other details of a similar nature which tend to cause the final mark to be largely subjective.

In the March-April, 1934, issue of the JOURNAL, the relative merits of the new type and the oral methods of testing were discussed in great detail. Since then continued use of the new type tests has tended to prove that they are superior for the following reasons:

1. They examine more thoroughly. More questions can be asked and answered and the results of the candidate's training can be better determined.
2. They give more time for careful thinking. A candidate is not required to make an immediate answer to a question as in the oral examination. He is not subject to that nervous strain which causes some soldiers to forget all they ever knew in the presence of an examiner or inspector.
3. They permit a candidate to work at a rate of speed of his own choosing. He may take all the time he needs. Some may finish in twenty minutes, but if a candidate takes an undue length of time it will be plainly evident that he does not possess sufficient knowledge of the subject.
4. All candidates take the same examination for each rating. In the oral examination, when examining more than one candidate, as is usually the case, no question can be asked twice, and a man may be asked either the few questions to which he knows the answers or the few to which he does not. We cannot be sure that all who failed knew less about gunnery than those who passed.
5. The final rating is objective. Unfairness and guesswork are eliminated by the use of the keys for objective scoring. Only knowledge of gunnery is tested.
6. The new type testing improves instruction in gunnery. Analytical studies of the scores on particular subjects in the tests may reveal a general weakness among candidates from a certain battery and consequently a weakness in the instruction for which the responsibility can be definitely placed.
7. They provide an objective record for headquarters. No man can complain of unfairness, since his test is kept on file for at least six months as evidence of either his failure or success. If deemed necessary the papers could be sent to the battery commanders to be used for further remedial instruction.
8. They are more economical of time and money. Gunners' boards cost money in extra drill pay and traveling allowances; also, the majority of officers would welcome relief from this duty. The pay for one captain for one drill would be sufficient to defray the expense of purchasing the printed forms of the new type test for an entire battery.

Battery "B" 64th C. A. (AA) Wins Knox Trophy

IT is the fixed policy of the Society of the Sons of the Revolution in the Commonwealth of Massachusetts to award annually, to a battery of the Coast Artillery Corps, a trophy whose designation pays homage to the first outstanding American Coast Artilleryman—General John Knox. This is one of the most coveted and eagerly sought after prizes within the reach of Coast Artillery batteries. The basis of the award is general excellence in target practice. It is not necessarily awarded to the battery that made the highest numerical score. The reasons for this are readily apparent when we consider that a number of factors, other than sound gunnery principles, may favorably or adversely affect the final score. Such things as personnel errors, errors in applying the rules of adjustment, time out occasioned by avoidable causes, accuracy in spotting, and many other similar factors which have a direct bearing upon the score, should be considered in determining superiority in target practice. It is not our purpose to attempt to explain how these factors are evaluated. Sufficient it is to say that every effort is made to reduce all batteries to a common denominator and to eliminate all factors including that of "luck" which may have mitigated against one battery or operated to the advantage of another. Insofar as possible the score is stripped to sound gunnery principles reflecting a high state of training and readiness for battle. All of these conditions may be summed up under the heading of "battle efficiency."

The award is made upon the recommendation of the Chief of Coast Artillery while the actual presentation is made at the banquet given by the Sons of the Revolution in the Commonwealth of Massachusetts.

The Coast Artillery Association desires to congratulate the entire personnel of Battery "B," 64th C.A. (AA), Ft. Shafter, Hawaii, for this outstanding and meritorious performance. They have won a coveted prize and added new laurels to the name and fame of the regiment, commanded by Colonel Willis G. Peace. At the time of the practice the battery commander was Major (then Captain) Oliver B. Bucher, C.A.C., the only officer with the battery. He is now Adjutant of the Harbor Defenses of Chesapeake Bay. The battery mans 3-in. antiaircraft

guns, and fired three practices during the year 1935 with the following scores:

1st—camera—152.29		Average score weighted
2nd—visual —119.63		to camera basis, 106.54
3rd —visual —112.60		

Under date of January 3, the Acting Chief of Coast Artillery addressed a letter to The Adjutant General, quoted in part as follows:

"It is desired to express to all members of Battery "B," 64th Coast Artillery (AA), Fort Shafter, T.H., heartiest congratulations on the winning of the Knox Trophy for the calendar year 1935. This trophy is much sought after by all organizations of the Coast Artillery Corps, and Battery B is announced as winner after the most careful review and study of all 1935 target practice records by the Coast Artillery Board. The fine record made by Battery 'B' in its target practices is a tribute to the high state of training of the Battery and its fitness for service. All members of the Battery should derive great satisfaction on the realization that their efforts have been rewarded by winning the coveted Knox Trophy. Major Oliver B. Bucher, who commanded the Battery at the time of the firing of its target practices, has been designated to receive the trophy and will make the necessary arrangements for the shipment of the trophy to the Commanding Officer, Battery 'B,' 64th Coast Artillery."

The contest was not one-sided, in fact it was no easy task to pick the winner, therefore it may be of interest to others to know who were the "runners up" in the contest. Second honors go to Battery "E," 55th C.A. (TD) Ft. Ruger, Hawaii. At the time of the practice the battery was commanded by Captain K. P. Flagg. This battery mans 155-mm. guns and its practice was of unusual and outstanding merit. It seems that a considerable part of the gunnery talent is concentrated in Hawaii.

Third place goes to Battery "I," 4th C.A. (AA), Ft. Amador, C. Z. At the time of the practice this battery was commanded by Major (then Captain) James L. Craig, the only officer for duty with the battery. Battery "I" fired this practice with 16-in. guns using airplane spotting and fire control.

The Association desires to commend and congratulate the entire personnel of these batteries and to wish them all possible luck for the 1936 contest.

Knox Medal Award

IN addition to the award of the Knox Trophy to a regiment of Coast Artillery, the Sons of the Revolution in the Commonwealth of Massachusetts awards annually a medal to an enlisted man of the Coast Artillery Corps. The award is made to the student in the Enlisted Specialists School (based upon the recommendation of the Commandant), who established the best record during the preceding school year.

The factors which enter into the selection are:

Scholastic standing
Coöperation
Diligence
Conduct and attention to military duty
Neatness
Character

For the 1934-35 school year the award goes to Private 1st Class Allen W. DeYoe. This is a coveted and highly prized honor, the winning of which reflects great credit upon the recipient because he is in the keenest kind of competition with especially selected men from the entire Corps, therefore, the Association takes this opportunity to congratulate Private DeYoe on his outstanding and meritorious accomplishment. The actual presentation of this medal will be made at the same time the Knox Trophy is presented to Major Oliver B. Bucher, representing Battery "B," 64th C.A. (AA). We wish for Private DeYoe a long and successful career in the Coast Artillery Corps.

SINCE IT HAS BEEN DECLARED SO FREELY *by our statesmen that we have disarmed to give a lead to the world, and since it is now clear that our lead will not be followed, it is reasonable to conclude that the duty of the government is now to rearm this country (Great Britain) in accordance with existing circumstances.*—ARMY, NAVY AND AIR FORCE GAZETTE.

Truckin' to Town

By Cuthbert

THIS summer the National Guard tried out its new seven-league boots. When the trial was over the chronic end-to-enders found that the total distance covered approximated three hundred and twenty circuits of this earth at the equator, or, if you prefer, some eighteen round trips to the moon. For the anti-end-to-enders let us hasten to put it as didactically as possible. This summer, in the greatest military motor movement ever attempted, 156,000 National Guard troops were transported a total distance of some 8,000,000 truck miles.

From every point of view this tremendous undertaking exceeded the most optimistic expectations. In this day of frenzied spending it will strike the country with the force of novelty to learn that the huge fiscal item involved in transporting the Guard to and from its annual encampment was this year slashed in half. It is no less amazing to learn that despite the sudden death lurking on our highways the casualty rate for this year's move by motors was far less than in former years when the Guard moved to camp by foot, by horse, by rail, and by God. This particular feature becomes still more astonishing when it is realized that in most cases the time factor prevented adequate schooling in the conduct of military convoys and that, by and large, drivers were told off by group, even by company, with no test other than an affirmative reply to the query, "Can you drive?"

From a military point of view, National Guardsmen the country over are beginning to realize that exploration of the new possibilities offered by motors has scarcely been started. The more obvious advantages accruing from the modest motorization program of the Guard were demonstrated on every hand this summer. For instance, the time schedules on which the various National Guard divisions based their moblization plans only last year are today as anachronistic as a Model T Ford in a 1936 show room. In most states motors will at least halve the old times allowed for concentration. So too it was found, as expected, that the Guard's new gasoline chargers fostered a wider, more diversified and a more realistic training. Training areas hitherto inaccessible owing to the ever present time-distance factor were brought within a half-hour or so of old camps. The tedious hours of close-order drill and parade-ground tactics were promptly exchanged for a realistic field training in varied terrain unfamiliar to both officers and men. The conclusion was foregone: interest quickened, morale shot up, and combat efficiency climbed a graph that looked like Pike's Peak.

Then, too, there are the secondary corollaries. For instance, a vast body of experience in motorization is being built up that should prove invaluable in charting the future policies of the War Department. The practicality of using the standard types of commercial vehicles for military purposes should be decided once and for all by the exhaustive tests those vehicles are getting in the hands of National Guard units located in every part of our country. The perplexing questions of convoy size, control, speed, ratio of trucks to unit served, etc., should find reasonably authoritative replies in the field service experiences of eighteen infantry divisions.

Combat efficiency climbed a graph that looked like Pike's Peak.

New ideas beat at the rust-eaten gates of the military establishment and the old order trembles. The impetus and freshness of this new thought may be epitomized by a single example. Consider the old concept of our animal-drawn trains. When a unit bogged down for a night, or a week, or a month, its trains lived with it, slept with it, moved with it. A commander would rather have lost his right arm than his trains. Animals had to rest, sleep, eat. The new thought laughs at such a procedure. Motors do not tire. They can work 24 hours a day. While men sleep the trucks keep on the job. It is wasteful to tie a group of motors to a regiment with the enjoinder that these are yours and they stay with you whether you march, halt, camp, or what not. That is the animal concept but it is a far cry from the army mule to the army truck. The experiences of the National Guard this summer in its 8,000,000 mile jaunt are heavy with such apparently simple but radical departures. The word simple is used advisedly; such things are as simple and apparent as Columbus's feat of standing an egg on end—once the thought is conceived.

How did this immense motor move work? How was it planned? What made the wheels go round? Perhaps a hurried glance at Michigan's 32d Division will not only give answers to these particular questions but furnish the reader some idea of the magnitude of the problem that all Guard units were called upon to solve.[1]

* * *

Michigan has an area of 57,980 square miles which is some 7,000 square miles larger than England.[2] Units of the 32d Division, numbering some 4,500 officers and men, are flung from one end of this great state to the other. Imagine, then, the nice problem involved when it was decided to move every last man of this outfit to the division camp at Grayling by motor. That's no problem, you say? All right, just inject this modest little factor: the division had only 231 trucks at its disposal. Little more difficult, eh? Yes, but it can be worked out nicely

[1] The author is not a native of Michigan, has never been a resident of that State, and has never served with the Michigan National Guard. This statement is made, dear reader, lest you assume that Cuthbert is doing a little axe grinding.

[2] The attention of all doubting Thomases is invited to the fact that the southern and largest division of the island of Great Britain is known as England. It embraces 50,890 square miles.

by sending a regiment or so to camp at a time, bringing them back, and then picking up the remainder of the outfit and carting them to camp. Easy enough had it not been for a little passage in the march directive which casually stated that *all* Michigan units of the 32d Division would be on hand at Grayling during a four-day period in order to participate in a division exercise.

With these requirements in mind pull out your atlas and spot a few of the half-hundred towns and cities in Michigan that harbor Guard units. Here are a few—just a few: Detroit, Ypsilanti, Lansing, Holland, Ionia, Coldwater, Kalamazoo, Big Rapids, Ann Arbor, Adrian, Redford, Muskegon, Belding, Alma, etc. Now take your 231 trucks and get your 4,500 troops from home to camp and back home again remembering that *all* must be together at Grayling for a four-day period and that only fifteen days per man is authorized by law.

It didn't take the staff of the 32d Division long to discover that they had a real problem on their hands. Their first hasty figures showed that this move would involve some 400,000 truck miles (note for end-to-enders—sixteen times around the world). And then they really dug in. When they again emerged in the light of day they were weak and wan, but their eyes glittered with the unmistakable glitter of the brain truster who has been brought to bed and delivered of a brain child.

Convoy schedules had been worked out to the celebrated gnat's eyebrow; their time tables made the Pennsylvania Railroad's system appear to be a struggling beginner. Routes had been selected and reconnoitered; gasoline and oil procurements under the Treasury Department and Navy Department contracts had been arranged at carefully determined stations. Truck allotments based on personnel and equipment had been checked and rechecked. If everything worked out according to plan the division would start rolling into Grayling on M Day. By M Day plus so many days the concentration would be complete, the exercise would begin, and four days later the first echelon in would have completed its fifteen days and be rolling homeward.

Now plans as necessarily involved as this have an unfortunate way of breaking down. One unit ties it up which results in a complete disruption of all subsequent time-schedules; then the Old Man all but has a stroke and the staff goes out on its several ears. The strange thing—nay, the astounding thing—about this complicated move involving hundreds of thousands of miles lies in the fact that not a single unit misunderstood instructions, or was unavoidably delayed, or ran out of gas, or had recourse to any of the stock alibis so easily evoked when a motor move goes hay-wire. They rolled into camp with such precision and so exactly on schedule that one visiting fireman doubted the accuracy of his watch when it clocked one unit two minutes late at the end of a 400-mile run.[1]

That shows, the reader will observe, what can be expected of highly trained drivers working under officers experienced in motor marches. Begging the reader's pardon, it shows just the reverse. The drivers received no preliminary training. Unit commanders merely called for so many drivers and that number stepped forward. They were given a few simple instructions about speeds, disances between trucks, destination, etc. Trucks were loaded and off they went. The smaller convoys frequently operated under a noncommissioned officer where no officer was allowed or available. If any of the officers or noncommissioned officers had had previous experience with motor convoys no one got wind of it.

It made no difference how close to camp or how far away the convoys were checked, they were invariably running in perfect order. Not even the frequent and unexpected inspections from the air revealed any infringement of march discipline; the columns maintained their 100-yard distance between trucks with mathematical precision; every vehicle hugged the right of the road; speeds conformed to the pilot truck. Such outstanding discipline proved its own reward; not a single accident of any consequence occurred.

In general the convoys were small, averaging between eight and twenty trucks. One ran as high as seventy. Agreement was universal that the smaller convoy could make better speed, could be more easily handled, interfered less with civilian traffic, and was easier on the men than the slow and unwieldy columns of sixty or seventy vehicles. And, of course, the smaller the column the less dangerous the threat from the air.

The motor is not as temperamental as its prima donna predecessor, the army mule, but the bald fact remains that neither the hay-burner nor the gas-burner will long endure without adequate and intelligent maintenance. The success of the 32d Division's move must be attributed in large part to the carefully worked out maintenance scheme. Maintenance men were selected from the skilled mechanics that abound in this state of many motors. At the end of each trip highly trained mechanics gave each vehicle the works. When the next driver stepped on the starter he knew that he had a perfectly tuned and well-lubricated motor under him. Without the tireless labor of these Guardsmen-mechanics it is not likely that the spectacular Michigan move would have clicked through its 400,000 truck miles with such precision.

The German method of moving to a designated rendezvous by individual truck could not be tried out owing to the great shortage in vehicles on the one hand and the risk of experimentation in the problem posed. The small convoys that were employed by the Michigan units does show, however, the reliability of a reasonable adaptation of the German system.

At the beginning of this paper the author blithely assumed the onus of being an end-to-ender. He categorically refuses, however, to be a lesson pointer-outer. There are plenty of implications in this short discourse that our motor-minded brethren will see, if they are so inclined. If not—well, that's another problem.

[1] It is a well established principle that every author is allowed at least one minor exaggeration for the sake of emphasis.

COAST ARTILLERY ACTIVITIES

Office of Chief of Coast Artillery

Chief of Coast Artillery
MAJOR GENERAL HARRY L. STEELE

Executive
COLONEL HENRY T. BURGIN

Personnel Section
LIEUT. COL. R. T. PENDLETON

Matériel and Finance Section
LIEUT. COL. O. L. SPILLER
MAJOR C. W. BUNDY
MAJOR B. L. MILBURN

Organization and Training Section
LIEUT. COL. E. E. BENNETT
LIEUT. COL. ROBERT M. PERKINS

Plans and Projects Section
COLONEL G. A. WILDRICK
LIEUT. COL. C. M. S. SKENE

Panama Canal Department News Letter

Department Artillery Officer
COLONEL LEWIS TURTLE, C.A.C.

Fort Amador
COLONEL EARLE D'A. PEARCE
4th C.A. (AA).

Fort Sherman
COLONEL WILLIAM M. COLVIN
1st C.A.

Fort Randolph
LIEUTENANT COLONEL JAMES S. DUSENBURY
1st C.A.

By Lieutenant Colonel W. C. Foote, C.A.C.

WITH this issue the Panama Canal Department correspondent revives the custom of furnishing the readers of the JOURNAL with a news letter, in order that they may know what is happening in this far away, but very important, colony.

Brigadier General Laurence Halstead has arrived and assumed command of the Pacific Sector. Although a "Doughboy" all of his service, nevertheless he possesses an unusual knowledge and grasp of both nautical and artillery subjects, accentuated by a technically inclined intellect. As this is being written we are preparing for a reception and dance in honor of General and Mrs. Halstead to welcome them to Amador. The transport that brought General Halstead took away our Department Commander, Major General Harold B. Fiske, who went to San Francisco and to retirement.

The departure and arrival of several general officers furnished the occasion for the usual quota of guards of honor and reviews. Just prior to his departure General Gulick held a Sector Review in honor of Mr. George T. Summerlin (USMA '96), Minister from the United States to the Republic of Panama. Sector reviews include all troops stationed on the Pacific side except the Department Headquarters Company and MP Platoon; this means that there are more than 5600 men in ranks or driving motor vehicles. Composite guards of honor, consisting of troops from all arms, honored General Fisk as he set sail.

In October the Canal Zone was again honored with a fleeting visit by the President. Ceremonies on the Pacific side began with a guard of honor from the 4th Coast Artillery. This guard first rendered honors to President Harmodio Arias of Panama when he arrived to pay his official respects. A few minutes later it rendered honors to the President of the United States when he landed. While the presidential party were sight-seeing at Madden Dam, all troops of the sector were assembled at Fort Clayton where they were reviewed by the President. A picked command from the 33d Infantry escorted the President from the Gaillard highway to the reviewing stand. As the President and his party and ranking Army and Navy officers and their wives lunched at the Fort Clayton Officers' Club, the 11th Engineers were moved by truck to Pedro Miguel Locks where they formed a guard of honor for the President as he boarded the "Houston" to resume his transit of the Canal.

Target Practices

After recovering from the 1935 Department Maneuvers, and simultaneous with the advent of the rainy season, the 4th Coast Artillery entered on its 1935 service target practice season. Battery "D" (Mine) led off with two 155-mm. gun practices, fired by First Lieutenant William Lawton, at an average range of approximately 13,000 yards. Next Battery "G," Captain (now Major) Ellsworth Young commanding, fired the 14-inch railway battery at an average range of 31,585 yards. This shoot, although excellent for time and almost devoid of any lateral dispersion, produced no hits; notwithstanding the absence of any "wild" shots, and the fact that the center of impact was 120 yards short. We are prone to expect too much in the way of hits at extreme ranges with the limited number of shots allowed for target practice. Battery "D" came into its own when it conducted a service mine practice, after planting in a pouring rain; Captain Vern Walbridge's nautical knowledge acquired at Annapolis served him well, producing two hits and an almost perfect score.

Battery "I" wound up the 2d Battalion's seacoast season by firing a long-range, air-controlled, shoot at Battery Haan—a 16-inch gun. In this practice the battery was "blindfolded," all target locations (position finding) being by airplane and all adjustment based entirely on airplane spots. The average range was about 41,600 yards. A bow on hit occurred on the twelfth shot. All ranges (target, splash and set) averaged around 93 per cent of the maximum for the projectile and powder charge used. This was an "advanced" target practice in every sense of the word. It carried on the work initiated with a 14-inch railway gun at Fort Story, resumed in 1930 by Captains Campbell and Bowering at Battery Murray; also by Major Leroy Lutes in Hawaii in 1932. There was no additional allowance of ammunition in preparation for this shoot. The object was to pull off an air-controlled practice using equipment already available and eliminating the experimental features incorporated in the previous shoots. The only new gadget tried out was the Haggerty Spotting Device, invented by Lieutenant Robert F. Haggerty, who was sent to Panama with it. This device converts airplane clock "spots" into range and azimuth corrections in a form suitable for use in rapidly correcting firing data. Both inventor and gadget proved most valuable for this advanced practice.

Early in November Battery "C" (Captain John M. Moore, commanding) fired a special practice from a two-gun 155-mm. battery at a target towed by the destroyer "Manley" at an average target speed of 19 knots. The course of the target was as nearly directly toward the battery as safety to the towing vessel permitted; the range was between 10,000 and 9,000 yards. This shoot, which was for the purpose of developing a simple fire-control and position-finding system for 155-mm. batteries, brought the moth-eaten time-range board into its own. We believe that all seacoast artillery targets should be capable of high speed towing. The day of 7 to 10 mile an hour target speeds is over (or should be) except for shoots intended to illustrate fire against landing attacks in ships' boats. Our practices should be fired at targets moving at speeds and maneuvering as a hostile fleet would if it were attacking our harbor defenses. This seems to indicate the need for a radio controlled seacoast artillery target.

Miscellaneous Training

Outside of target practices, the time of the 4th Coast Artillery has been taken up with small arms practice, gunners' instruction and examinations, command post drills, the usual artillery drills, bi-weekly close order drills and maintenance of their far-flung matériel. Included was an overnight maneuver when the Coast Artillery troops were required to lay out, dig in, and organize a regimental defensive sector. For this purpose a reinforced Engineer Company was attached to provide technical advice, tools and matériel; while the 16th Pack Train transported tools, matériel and water over trails unsuited for trucks. The Pack Artillery Battalion from Clayton and the Chemical Company from Corozal occupied positions in support of the 4th C. A. 'Twas a most laborious and instructive exercise, pleasantly and surprisingly marked by the total absence of Jupiter Pluvius.

Amador is now concentrating on eliminations to determine the two batteries to compete against the 1st Coast Artillery for the Department Commander's Trophy.

Small Arms Competitions

The 4th Coast Artillery staged a regimental rifle and pistol competition. For the rifle, each battery was permitted to enter a five-man team; in addition, there were a number of individual officer entries. All firing was at 200 yards; 20 shots slow fire, 10 standing and 10 sitting; 20 shots rapid fire, 10 sitting from standing and 10 prone from standing. Results (possible 1000 per team): Btry. "I," 901, trophy winners; Btry. "D," 897; Btry. "B," 858; Btry. "G," 857; Btry. "F," 845; Btry. "C," 831; and Btry. "A," 830. Individual high scores (200 maximum): Corporal Joseph T. Royal, Btry. "I," 193; Lieutenant Robert W. Hain, 182; Captain Norman B. Simmonds, 189; and Private James G. Weidman, Btry. "F," 188.

In the pistol competition, two enlisted men per battery and any officer could enter. Possible 300. High scorers in order of standing: Major Harry R. Pierce, 274; Major James L. Craig, 258; Lieutenant E. A. Chapman, 229; Captain Vern Walbridge, 222. High enlisted man, Private Alfred B. Sarver, Btry. "D,", 218.

An Amador Officers' Pistol Team has been formed and to date has won two matches—one with Fort Clayton and one with the officers from the U. S. S. "Houston."

Athletics

Amador won the Pacific Sector boxing competition, piling up 515 points, Fort Clayton was second with 415,

Corozal third with 150, and Albrook fourth with 110 points. Individual championships won by the 4th C.A. were bantam and lightweights; with runners-up in lightweight, welterweight, light heavyweight and heavyweight classes.

Plans provide for a post track meet each month. Unusually hard rains, even for the rainy season, made it impossible to hold the November meet without resorting to flat-bottomed boats; these are not yet included in tables of allowances.

The present drill schedule provides for athletics on Tuesday mornings following close order drill and parade. This is proving of great benefit in discovering potential and developing actual athletic material. It is a great morale booster, but who ever heard of any necessity to boost the morale of the Coast Artillery?

Clubs

An NCO's Club has been organized and attractive quarters fitted up in the former mobile artillery gun shed, located near the Post Exchange beer garden. Business is reported good.

The more or less moribund Officers' Club has undergone a metamorphosis: a new constitution and by-laws have been adopted, and, most vital of all, the Club has found a real home on the main floor of the bachelor officers' quarters. Heretofore it had no home; it existed as an organization which occasionally threw a post party at one of the clubs in Panama City. Other parties loom up as the holidays approach. The Club will be a boon to the officers, especially to those whose pay checks preclude attendance at the Union Club and elsewhere in Panama.

Fort Sherman Notes

The 2d Battalion, 1st Coast Artillery (AA), designated as Harbor Defense troops, has experienced a full training season and much unfavorable weather, combined with a shortage of officers. The latter has been remedied by new arrivals and the new season will open with a full complement.

The newly authorized enlisted sttength has almost been attained, detachments of recruits filling the four batteries to over 220 men each. The quartering situation is acute but we are not yet in tents. The total strength is above 1000 enlisted men and 24 officers.

Our slightly seaward position always has assured Sherman of a fair share of the rain allotted to the Zone, but July broke all previous records and November was one of the four wettest months on record.

Installation of the new Sperry portable lights is proceeding rapidly notwithstanding the absence of roads. As the AA installations increase in number the wonder grows at the extent of our manned equipment. We are rapidly acquiring a plant which is the most difficult to man, supply and maintain of any in the Coast Artillery.

On completion of Atlantic Sector mine practice, the USAMP *Graham* sailed for Fort Monroe and Norfolk where she is now undergoing repairs and overhaul. It is hoped that the queen of the Sherman fleet will return as good as new.

The Post baseball league has completed the series of scheduled games. Battery "C" was easily the winner with no lost games. Last season Fort Sherman captured the Department championship and we expect to repeat.

The hunting is excellent on this side of the Canal and at least two of our Nimrods have promised to get a tapir during the Christmas holidays. This animal sometimes reaches 1600 pounds in weight.

With the retirement of of prehistoric motor transportation as of December 31, 1934, Fort Sherman was left on foot (there are now two trucks for freight and police); hence it is the concensus of opinion that a private car is almost a necessity although the road system totals about 3½ miles. A car makes an excellent raincoat when you *must* make the boat and rain is falling at the rate of nine inches in 36 hours. In spite of a Department circular to the contrary, if ordered here consider bringing a car. From New York, freight is one cent a pound via transport and $36.50 per car regardless of weight via United Fruit Lines. Cars may be taken to Colon on certain trips of the Harbor boat. There are no garages and the climate is extremely hard on finish and upholstery, but there are now seventeen private cars at the Post.

Doings at Fort Hancock

Colonel L. B. Magruder, *7th C.A.*
Commanding Harbor Defenses of Sandy Hook

Lieutenant Colonel R. S. Dodson
Commanding 2d Battalion 52d C.A.

By Lieutenant Colonel E. B. Dennis

On November 1, 1935, Colonel Magruder, after completing a tour of duty on the War Department General Staff, assumed command of these Harbor Defenses.

On November 21, the District Commander, Brigadier General (now Major General) Wm. E. Cole, made his annual tactical inspection; also an inspection of all training activities. General Cole was received with full military honors, including a review of the entire command.

Colonel and Mrs. Magruder were the honor guests at a reception and dinner dance given by the officers and ladies of the post. The officer's club was beautifully decorated for the occasion and great credit is due the committee of ladies in charge of arrangements.

The post football team got away to a late start but made creditable progress under the able coaching of Lieutenant Robert Morris. With a resumption of activities at the beginning of the next football season we feel sure that the team will give a good account of itself.

The post bridge club meets at the officer's club each alternate week. To date Lieutenant and Mrs. A. C. Peterson are in the lead.

Bowling is participated in by the officers and their families each Monday evening. Following this refreshments are served at the officer's club.

The local CCC company has greatly improved the natural beauty of the post. Much work has been done in forestation, grading, levelling, and putting out new shrubbery.

Thirty-six members of the garrison attended the Coast Artillery reception given by General and Mrs. Cole at Fort Totten on December 27. This proved to be a very delightful affair and gave all those present an opportunity to congratulate the District Commander on his promotion to the grade of Major General. While this promotion is gratifying to all the Coast Artillery personnel we regret that it has resulted in the transfer of General Cole to duty elsewhere.

Fort Monroe News Letter

BRIGADIER GENERAL JOS. P. TRACY, U. S. ARMY,
Commanding.

COLONEL RUSSELL P. REEDER, 2d C.A.
Commanding Harbor Defenses of Chesapeake Bay

COLONEL HORACE F. SPURGIN,
Commanding 1st Bn., 51st C.A.

LIEUTENANT COLONEL ROBERT C. GARRETT,
Commanding 3d Bn., 52d C.A.

LIEUTENANT COLONEL FRANK S. CLARK
Commanding 1st Bn., 2d C.A.

By Major O. B. Bucher, C.A.C. Adjutant

A REVIEW of the entire Harbor Defense Command was held on December 21st. Each battalion was formed in mass, five squads front and five squads in depth. With bayonets fixed and helmets shining the passing in review was spectacular and inspiring. The band experienced considerable trouble because their trombones, basses and cornets "froze up." Immediately following the review the Commanding General inspected the barracks. He was most complimentary in his remarks concerning the entire command, stating that the inspection was the most satisfactory he had made at Monroe.

Several benefits have been given for the purpose of raising money to purchase a new carpet for our Post chapel. A large portion of the cost was raised from the benefit boxing tournament. The Recreation Officer dug up some excellent talent and put on a real show. We now have an arena that is really up-to-date. The boxing ring has been placed in the new central garage; new bleacher seats have been installed accommodating 1,000 people.

The C.C.C. Company has detailed a few men to regrade the parade ground. The many low spots are being filled with topsoil brought from the C.C.C., Sub-Camp at Deep Creek near Portsmouth, Virginia. By the time the summer camps start we hope to have a well graded parade ground with a heavy sod and no dust.

1935-36 STUDENTS—REGULAR COURSE, THE COAST ARTILLERY SCHOOL

TOP ROW *(left to right)*: 1st Lt. Woodbury, 1st Lt. Toftoy, 1st Lt. Elias, 1st Lt. Chamberlin, 1st Lt. Anderson, 1st Lt. Samuels, 1st Lt. Rasmussen, 1st Lt. Francis, 1st Lt. Partin.

MIDDLE ROW *(left to right)*: 1st Lt. Ross, 1st Lt. Pohl, 1st Lt. Heidland, 1st Lt. Kyster, 1st Lt. Barber, 1st Lt. Seward, 1st Lt. Farr, 1st Lt. Parks, 1st Lt. Guyer, 1st Lt. McKee, 1st Lt. Tarrant.

BOTTOM ROW *(left to right)*: 1st Lt. Benner, U.S.M.C.; 1st Lt. Skinner, 1st Lt. Baron, 1st Lt. Brusher, Capt. Palmer, Capt. Fontvielle, Capt. Schuyler, Capt. Martin, Capt. Chester, Capt. Gard, Capt. Hopkins. Absent: Capt. Tischbein.)

1935-36 STUDENTS—SPECIAL COURSE FOR BATTERY OFFICERS, NATIONAL GUARD AND ORGANIZED RESERVES

TOP ROW (*left to right*): 2d Lt. Cox, 203d CA, Mo. NG; 2d Lt. Tarves, 213th CA, Pa. NG; Capt. Rosseau, CA-Res; 1st Lt. Harris, 203d CA, Mo. NG; 1st Lt. Lefkoff, CA-Res; 1st Lt. Van Amburgh, CA-Res; 1st Lt. Beyersdorfer, CA-Res; 1st Lt. Church, CA-Res; 1st Lt. Mulrooney, 198th CA, Dela. NG; 1st Lt. Hoffman, CA-Res; 1st Lt. Graves, 260th CA, D. C. NG; Capt. Remaley, CA-Res.

MIDDLE ROW (*left to right*): Capt. Cooper, CA-Res; 2d Lt. Daniel, 263d CA, S. C. NG; 1st Lt. Suhar, 245th CA, N. Y. NG; Capt. Wilson, CA-Res; Capt. Porter, 263d CA, S. C. NG; 2d Lt. Dohm, 248th CA, Wash. NG; 1st Lt. Wuest, CA-Res; Capt. Kelley, CA-Res; 2d Lt. Markle, 213th CA, Pa. NG; 1st Lt. Ballough, 265th CA, Fla. NG; 1st Lt. Southall, 212th CA, N. Y. NG; 1st Lt. Rapp, 251st CA, Cal. NG; 2d Lt. Futral, CA-Res.

BOTTOM ROW (*left to right*): Capt. McLaughlin, CA-Res; 1st Lt. Buser, 244th CA, N. Y. NG; 1st Lt. Prescott, 202d CA, Ill. NG; Capt. Kuklinski, 250th CA, Cal. NG; Capt. Saul, 250th CA, Cal. NG; 1st Lt. Gallant, 241st CA, Mass. NG; Capt. Dunbar, CA-Res; Capt. Price, 206th CA, Ark. NG; Capt. Sayles, 202d CA, Ill. NG; Capt. Geller, CA-Res; Capt. Parkison, 203d CA, Mo. NG; 1st Lt. Holt, 198th CA, Dela. NG; 2d Lt. Tindall, 198th CA, Dela. NG.

The new sea wall at the post got a good tryout on December 13th. A strong northeast wind kicked up a heavy sea and brought in a tide of 4.4 feet, which was 1.5′ above normal. The sea wall took it and liked it.

Major Otto B. Trigg, Cavalry Instructor at the Coast Artillery School, has his classes going through their paces in fine style. In addition to the regular school classes he has organized a ladies' class of 22, a girls' class of 33, and a boys' class of 32. Almost all of them are taking to the riding racket in true western style.

The annual Christmas Pageant was presented at the Liberty Theatre on the afternoon of December 22d under the supervision of Chaplain J. Knox Bodel and Lieutenant Colonel H. H. Acheson, C.A.C. The performance was spectacular and thoroughly enjoyed by a capacity crowd. Early on Christmas morning the 2d Coast Artillery Band made a tour of the post playing a program of Christmas carols. The seasonal music added considerably to the Christmas spirit and was greatly enjoyed by the members of the garrison. With numerous trees decorated with colored lights and about eight inches of snow on the ground, Christmas Eve presented a scene of splendor such as is exemplified in song and story.

Radio enthusiasts are being rendered a real service by the radio interference detail which has scoured the post for local disturbances. Technical Sergeant Reardon and his detail built a detector which works like a charm. The hook-up is of Sergeant Reardon's own design, and receives broadcasts the same as a standard type receiver; this device picks up the waves that cause the interference.

The radio controlled boat has undergone a successful test by the Coast Artillery Board. The boat is a Gar Wood sport model, 28 feet long and capable of a speed of 35 miles an hour. It is to be utilized as a high speed target, controlled through signals sent out from a transmitting set.

The stork has had a busy holiday season at Monroe. Just before Christmas the old bird delivered a tiny lady to Major and Mrs. R. W. Argo, and then he left one at the quarters of Lieutenant and Mrs. Weitzel. On Christmas Day Lieutenant and Mrs. J. B. F. Dice were overjoyed to receive a ten-pound boy. Congratulations to all of the happy parents.

Corregidor News Letter

BRIGADIER GENERAL JOHN W. GULICK, *Commanding*
COLONEL WILLIAM S. BOWEN, C.A.C., *Executive*

59th Coast Artillery
COLONEL PAUL D. BUNKER
60th Coast Artillery (AA)
COLONEL ALLEN KIMBERLY
91st Coast Artillery (PS)
LIEUTENANT COLONEL CLAIR W. BAIRD
92d Coast Artillery (PS)
MAJOR REINOLD MELBERG

FOR two weeks these defenses enjoyed the good fortune of having two resident general officers. General and Mrs. Gulick arrived in November and were entertained by General and Mrs. Kilbourne during the socially hectic days of the Inauguration. Almost immediately thereafter General and Mrs. Kilbourne left for China where the General made an official inspection of the troops at Tientsin. Upon his return he

The Secretary of War, with fish caught off Lubang Island.

assumed command of the Philippine Department. The Corregidorians (a group of civilian employees) were host at a party honoring the Kilbournes, to which all officers and ladies of the post were invited. On the afternoon of their departure all the members of the Corregidor Club gathered for an informal reception. Mrs. Kilbourne was presented with a handsome sterling silver water pitcher as a farewell remembrance. The road from Topside to the wharf area was lined on each side with the troops of the four regiments, while through San Jose Barrio the street was lined with Filipino school children waving flags.

Immediately after taking over command General Gulick started an intensive inspection of the troops and equipment. He always has been greatly interested in artillery training and a heavy schedule is predicted.

The inauguration of the Commonwealth of the Philippine Islands was a historic occasion and brought forth a series of parades, balls and receptions attended by many members of the garrison. It also brought a number of distinguished visitors to Corregidor. The President of the United States was represented by the Honorable George H. Dern, Secretary of War, who, with Mrs. Dern and his party, made the voyage in the cruiser *Chester*. They visited Japan, China and many parts of the Philippines. During their visit to Corregidor the Secretary and Mrs. Dern were the guests of General and Mrs. Kilbourne. The party made a tour of inspection of the installations of the post and witnessed a target practice from the 75-mm. subcaliber guns at Battery Smith.

For the entertainment of the distinguished guests a fishing trip to Lubang Island was organized. The secretary demonstrated his ability as a fisherman by landing a 26-pound asogan (a species of barracuda) and a 12-pound lapu-lapu.

The Congressional party, 122 strong, was invited to Fort Mills. Unfortunately the first typhoon in seven weeks arrived the day before the visit and only 32 elected to accept the invitation. When the Mine Planter cleared Manila the number two typhoon signal was flying and the whitecaps were combing over the breakwater; fortunately the storm abated and the visitors made the trip in comparative comfort and were able to visit the many interesting places and to witness a 155-mm. gun practice. Honors were paid to The Honorable Joseph W. Byrns, Speaker of the House of Representatives.

The training season opened early with little of the delay from storms that riddled schedules last year. All regiments have completed small arms and beach defense firings. The 59th and the 91st have fired their additional assignments of antiaircraft machine guns with excellent results.

The 60th Coast Artillery is representing this post in the Department Military Tournament now being held in Manila for the benefit of the Army Relief. This is a very ambitious military show participated in by all arms. Coöperating with the Air Corps the antiaircraft units repulsed a simulated attack on the city of Manila.

By defeating the strong team of the 31st Infantry the 59th Coast Artillery won the Department American Basketball Championship, therefore the trophy remains on the post for the third consecutive year, the team representing the 60th C.A. having won each of the two preceding years.

The rainy season officially closed with one of the rare "dry typhoons"; a typical number two, except that almost no rain fell. Strong dry winds evaporated the moisture from all vegetation; many trees lost most of their leaves, and some fine *bougainvillea* vines will not blossom this season. The rainfall at Corregidor for the year reached 96 inches—a figure somewhat above the average. In Baguio, one of the wettest places in the world, 225 inches of rainfall was recorded during the same period. Of this amount 115 inches fell in nine days. Mobile, Alabama, the wettest city in the United States, has an average precipitation of 61 inches, Washington, D. C., has 42 inches, and Denver, Colorado, 14 inches.

The November transport brought many new officers to the post. Lieutenant Colonel Otto G. Pitz and Major E. R. Barrows are assigned to the 59th C.A. Major C. G. Foltz took over command of the Guard Battalion and Major M. H. Parsons is the Adjutant of the 92d C.A. (PS). Captain Bonner Fellers is assigned to the 60th C.A. Major Foltz surprised his many friends by bring-

ing a bride on his second tour of duty at this post.

The sailing of the December transport was unique in that not one officer from Corregidor left for the homeland. Major J. deB. Walbach left for a tour of Japan and China; later he will return to the United States by way of the Suez Canal. His new station is Wilmington, N. C.

Harbor Defenses of Pensacola

COLONEL ROBERT ARTHUR, *Commanding*
LIEUTENANT COLONEL H. F. NICHOLS, *Executive*
By Captain M. A. Hatch, C.A.C.

THE officers of the 925th Coast Artillery (AA), 45 strong, arrived at Fort Barrancas December 1, for the first winter encampment here since the World War. "Winter" is used advisedly and its advent was timed perfectly to coincide with the arrival of the 925th. One trainee appeared uniformed in cotton and another with a bathing suit as part of his equipment. However they were from "way up north" (Georgia) and had never been so far south before. The Florida Chamber of Commerce undoubtedly is a little over-zealous, and perhaps a little careless with facts, in its advertising literature (Yes we read "Time").

Although overcoats were a necessity on wind-swept Santa Rosa Island, where the batteries are located, the weather was, most of the time, clear and not too chilly to interfere with training. The antiaircraft-gun and machine-gun firings were accomplished on schedule and in an excellent manner, as were all details of the camp. Lieutenant Colonel Charles S. Vance, 925th C.A., in his final report made the following pertinent remark:

> "Winter camps in my opinion are preferable to summer camps at this Post. The cool weather that prevails at this time of the year puts more life in the officers and they are in better shape to absorb the substance of the instruction given."

A reception and dance for the visiting officers was held at Gorgas Hall, December 6th and a week later they returned the compliment.

General Bishop and Colonel Arthur on the Fort Pickens Railroad.

Fort Barrancas has been honored by two visits of Brigadier General P. P. Bishop, commanding the Fourth Coast Artillery District. The initial visit included an inspection from November 23d to 26th. Immediately following the review the regiment turned out for riot duty with the necessary equipment and all available transportation. In the event of this emergency only the band and staff detachments remain behind as a "home guard." General Bishop expressed his unqualified approval of the speed, efficiency and completeness of this maneuver as demonstrating a high state of training. Upon his return to District Headquarters he sent a letter to the Commanding Officer from which the following is quoted:

> "Upon my recent inspection of your command I was impressed by the most gratifying condition which I found to exist. This was evidenced by a state of training, morale, and leadership indicating readiness to execute any probable mission."

The second visit from the District Commander was on December 5th, when he inspected the training activities of the 925th C.A. (AA). He was tendered a review by the troops of the 13th officered entirely by the 925th personnel. During this visit the candid camera in the hands of Captain Short caught the General while on an artillery inspection trip at Fort Pickens.

In the early part of November Fort Barrancas had an unexpected opportunity to test the "Hurricane Order." Weather reports indicated that a hurricane of the first magnitude had passed over the southern end of the peninsula and was headed straight for Pensacola Bay. Fort Pickens was evacuated, property secured above previous high water levels, exposed buildings boarded up, boats manned by full crews and sent to the most favorable anchorage to ride out the storm, everything movable or blowable was fastened down, and all personnel supplied with water and rations for three days. Fortunately the force of the hurricane spent itself before reaching the West Coast of Florida. It seems that destructive hurricanes visit this locality at intervals of ten years. Records indicate severe storms in 1906, 1916 and 1926. If this means anything, sometime during the present year we may have more than a "dry run."

Our baseball team, under the direction of Captain Morrow, won the city championship by winning the series in the Twilight League and then defeating the champions of the Sunset League.

We are equally proud of our peerless stable of boxers which has defeated two Southern AAU champions and has lost no team matches. It is planned to send several members to the next Golden Gloves Tournament in Chicago.

The officers have a bowling team entered in the Pensacola league. In the first two encounters they have defeated the City Hall team and the Marines.

Our genial Commanding Officer received congratulations on Christmas Eve for his promotion to the grade of Colonel.

NEWS AND COMMENT

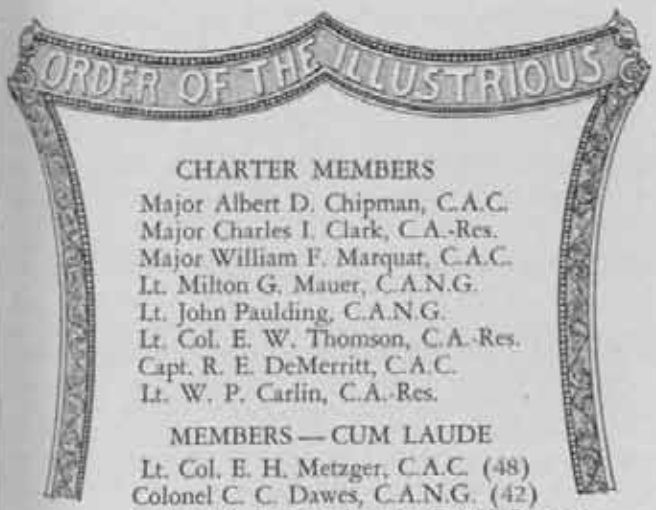

CHARTER MEMBERS

Major Albert D. Chipman, C.A.C.
Major Charles I. Clark, C.A.-Res.
Major William F. Marquat, C.A.C.
Lt. Milton G. Mauer, C.A.N.G.
Lt. John Paulding, C.A.N.G.
Lt. Col. E. W. Thomson, C.A.-Res.
Capt. R. E. DeMerritt, C.A.C.
Lt. W. P. Carlin, C.A.-Res.

MEMBERS — CUM LAUDE

Lt. Col. E. H. Metzger, C.A.C. (48)
Colonel C. C. Dawes, C.A.N.G. (42)
Colonel R. E. Mittelstaedt, C.A.N.G. (33)
Major Albert D. Chipman, C.A.C. (30)
Major Evan C. Seaman, C.A.C. } (24)
Captain O. D. McNeely, C.A.C. }
Colonel Richard H. Williams, C.A.C. (21)

MEMBERS

Major G. C. McFarland, C.A.C. (17)
Major Robert M. Carswell, C.A.C. (14)
Major C. S. Doney, C.A.C. (12)
Captain R. W. Russell, C.A.C. (8)
Major J. D. Brown, C.A.C. (7)
Colonel J. L. Holcombe, C.A.C. (5)
Major R. J. VanBuskirk, C.A.C. (5)
Lt. Col. Roy S. Atwood, C.A.C. (6)
Lt. Col. Albert Loustalot, C.A.C. (3)
Lt. Col. R. P. Glassburn, C.A.C. (2)
Major Ira B. Hill, C.A.C. (2)
Captain A. L. Lavery, C.A.C. (2)
Captain M. A. Herbert, C.A.N.G. (1)

Figures in parentheses show number of subscriptions submitted.

ORGANIZATIONS — CUM LAUDE

61st C. A. (AA) R.A.
202d C.A. (AA) Ill. N. G.
213th C.A. (AA) Pa. N.G.
250th C.A. (TD) Calif. N.G.
251st C.A. (AA) Calif. N.G.
243d C.A. (HD) R. I. N.G.

HONORABLE MENTION

Harbor Defenses of Sandy Hook

The 61st C.A. (AA) needs company. The invitation is extended to one and all. Plenty of room and no chance of crowding.

Let's Make It Unanimous

SEVERAL months ago we took occasion to send a letter to all regimental and post commanders and all officers on duty with the civilian components. In this we pointed out that the Coast Artillery Corps was trailing the procession in the percentage of regular army subscribers, and far below what it should be in the total number of subscribers to its JOURNAL.

This letter, with a bare recital of the facts, produced the most astounding results, especially among the officers on duty with the civilian components. Almost to a man they went to work with a will. The result to date shows five National Guard regiments in the 100% class, several hundred subscriptions from Reserve officers on active duty, and about 45 new subscribers from R.O.T.C. students. The 100% National Guard regiments are:

202d C. A. (AA) Ill. N. G.,
Colonel C. C. Dawes, Commanding.
Major N. L. Adams, Instructor.

213th C. A. (AA) Pa. N. G.,
Colonel C. C. Smith, Commanding.
Major E. C. Seaman, Instructor.
Captain O. D. McNeely, Instructor.

250th C. A. (TD) Calif. N. G.,
Colonel R. E. Mittelstaedt, Commanding.
Major J. D. MacMullen, Instructor.

251st C. A. (AA) Calif. N. G.,
Lt. Col. (Now Brig. Gen.) H. H. Morehead, Commanding.
Major G. C. McFarland, Instructor.

243d C .A. (HD) R. I. N. G.,
Lt. Col. E. C. Webster, Commanding.
Lt. Col. E. H. Metzger, Instructor.
Major M. G. Armstrong, Instructor.

The subscription list for the 250th included the chaplain and the medicos. Not to be outdone in this respect, the subscriptions sent in by the 243d included one chaplain, four medical officers, a Second Lieutenant not Federally recognized, one warrant officer (band leader), regimental headquarters, headquarters battery and each of the nine lettered batteries.

The R.O.T.C. units that have sent in subscriptions are:

Washington University 30:
Major A. D. Chipman, C.A.C., Senior Instructor.

University of Pittsburgh 5:
Lt. Col. J. L. Holcombe, C.A.C., Senior Instructor.

University of Alabama 8:
Major E. H. Underwood, C.A.C., Senior Instructor.

Carrying the analysis further we find that the Executive for Organized Reserves, Southern California, Colonel R. H. Williams, has joined the procession with 100% subscribers from the Coast Artillery Reserve officers on active duty with the C.C.C. in his district.

Could anything be more encouraging and better cal-

culated to warm the cockles of the heart than this fine manifestation of loyalty, interest and coöperation? Such magnanimous support is truly a cause for rejoicing. To each officer, from the Commanding Officer down to the latest commissioned shavetail, and the unit Instructors, we extend our thanks, congratulations, and appreciation.

The question is, who will be the next? The contest is being watched with the keenest interest by the President of the Association and the members of the Executive Council. Our ambition is to make it unanimous. What five regiments have done, certainly others can do. Each succeeding issue will carry an announcement of the results. There is plenty of room in the procession and no possibility of crowding. When will the next National Guard regiment join? Which R.O.T.C. unit will be number four? How about the remainder of the Reserve officers now on active duty?

In view of this exceptional performance it is only natural that we should do a little checking and make some comparisons with our sister arms. Much to our chagrin it develops that the Coast Artillery is not yet in its proper place at the head of the list. As this goes to press we find that the Cavalry has eight regiments in the hundred-percent column. More honor to the Cavalry Association, but we want to close the gap and ride neck and neck rather than taste the dust from their flying heels.

Now comes the sad part of this screed; we are reluctant to admit that compared to the marvelous performance of the National Guard, the regular regiments do not show up in a bright light. To date only one has joined the procession, viz., the 61st C.A. (AA), Lieutenant Colonel C. B. Meyers, commanding. At the very last minute, as final copy was going to press, the Harbor Defenses of Sandy Hook, Colonel L. B. Magruder, commanding, *almost* crossed the final stripe and are now 99 44/100% pure.

Several others are approaching the objective—a little more fire power, another rush and the day will be won. In several regiments only one or two officers are out of step (or is it the rest of the company and not Johnny?). Could it be that the baton of leadership has passed to other hands? Time will tell, but we have faith and confidence in the regular officer and feel sure that he is not lacking in regimental *esprit de corps*.

Viewed from every possible angle they are in a more fortunate and favorable position than are a corresponding group of officers in the Guard. Our goal is, "every regular officer a subscriber." This is not impossible of attainment. In view of the example set by the Guard and Reserve components it should be comparatively easy to make this an accomplished fact.

In passing we are constrained to comment on one sentence of a letter recently received from a non-subscriber. The writer, after explaining that he had not been a subscriber for a number of years, concluded with the statement, "The JOURNAL seems to be getting better." We wonder if he intended to admit that while a *non-subscriber* he has been a *reader* of the JOURNAL, otherwise he would not have been able to draw a comparison.

Again reverting to the support and coöperation given by the officers on duty with the Reserve component, we take the liberty of reprinting (without the permission of the author) a letter sent by one Instructor to all Coast Artillery Reserve officers on active duty within his district. This letter was not prepared for general distribution but a copy chanced to reach the JOURNAL office. It is so poignant and so clearly portrays the situation that we hope this reprint will come to the attention of each Reserve and Regular Army non-subscriber.

"My dear ——:

"The Editor of the COAST ARTILLERY JOURNAL has been checking up on you and has 'turned you in' as not being a subscriber to the JOURNAL.

"He points out the fact that subscribers to the other Journals, especially *Infantry* and *Cavalry*, have nearly doubled during the past year, while the COAST ARTILLERY subscriber's list has merely maintained its position. Maintaining its position is something, of course, but if one doesn't go ahead, there must be a 'nigger in the wood pile' somewhere. Do you ever see a Journal, and if so, have you any growls to register on it? Send them in to me if you have and I'll pass them along, incognito, if you prefer.

"I had no idea that the 'Doughs' and 'Leather Tails' were putting it over on us this way and it sort o' gets under my skin.

"I'll be frank with you and say that some years back I got thoroughly disgusted with the Journal and left it flat. However, I am now just as enthusiastic about it as I was disgusted with it before. It has really got the dope every Coast Artilleryman should read.

"I am especially desirous that you should become a subscriber. I have a good idea that you are kept pretty busy with your job. Your correspondence record since going on active duty is the criterion. While doing correspondence school work and attending unit schools, you were able to keep in touch with developments in the 'Corps,' but now it is different. You are out of touch with anything but C.C.C. most of the time, and it is really incumbent upon you to retain, and I am very anxious that you should retain, that pride of branch which the COAST ARTILLERY JOURNAL fosters. I want to be sure (that's my job) that you are a well-informed Coast Artilleryman as well as a good C.C.C. officer. You are the latter, I know, or you wouldn't be retained on active duty.

"It is up to all of us, Regulars and Reserves on active duty, to support the JOURNAL for the very good reason that we can afford to do so. It amounts to 25c a month which is pretty cheap for what you are going to get for it.

"Please don't put this down as just one more 'yowl' for the Journal and heave it in the waste basket. Send in this subscription card without delay. I suggest you begin with the current (September-October) issue as it contains a lot of information on Reserve activities as well as other informative articles."

Experience has fully demonstrated that personal contacts and personal solicitation is much more efficacious than all of the letters and literature that might be sent by mail. We are hopeful that the trail so clearly marked will become a well worn road and that all onlookers will join the procession.

A Friend of National Defense

Representative Parks inspecting a 14" Railway gun.

REPRESENTATIVE TILMAN B. PARKS was born in Lafayette County, Arkansas, a son of Captain William P. Parks, who was the youngest commissioned officer in the Confederate Army at the close of the Civil War. His early education was received in the schools of that State, later he attended the University of Texas and the University of Virginia. He was admitted to the practice of law in 1900 and shortly thereafter became a member of the House of Representatives of the Arkansas General Assembly and served three sessions in that legislative body. He was temporary Chairman of the Democratic State Convention in 1910. In 1914 he was elected prosecuting attorney of the 8th Judicial Circuit of Arkansas and reëlected in 1916. He was elected a member of Congress in November, 1920, and has been reëlected to each succeeding Congress since that date. Notwithstanding the fact that, he has had no military training and has not been directly affiliated with the military establishment, he has been one of the staunchest advocates of National Defense. He has been identified with the War Department sub-committee on appropriations for eight years; and has been a close student of the needs of the Army as presented in the annual budget. His thorough understanding of this is shown by his remarks on the floor of the House and his numerous public addresses. During the past summer, Representative Parks inspected the coat defense installations in Panama, Hawaiian Islands and along the Pacific seaboard from San Francisco to the South; these he strongly favors strengthening, believing that our seacoast fortifications should be modernized and placed in the best possible state of readiness, thus serving notice to the world that we are prepared to deny the use of our harbors to any coalition of hostile nations.

Representative Parks is the Chairman of the important sub-committee of the Committee on Appropriations which controls all funds for the military establishment. This places him in a position which vitally affects the entire structure of our National Defense system.

Representative Parks believes that we are woefully lacking in antiaircraft matériel, and that this important means of defense against attack from the air should be increased and funds made available for continuing experimentation, development and modernization. At this time when we hear so much concerning an increase for the Air Corps, the report of the Baker Board and the G.H.Q. air force, it is indeed reassuring to find a champion of antiaircraft defense occupying a high position in the councils of the Nation.

We are sure that we are voicing the sentiments of the Coast Artillery Corps, and in fact the entire Army, when we felicitate Representative Parks for his farsighted policy, his comprehensive understanding of the needs of the military establishment and the necessity for strengthening the first line of defense against attack from the sea or in the air.

We salute a new champion of preparedness, not for war but for the preservation of peace.

* * *

Results of the Election

THE returns of the annual election for members of the Executive Council of the United States Coast Artillery Association are now in; the vote was heavier than in previous years; this plainly shows that the members of the Association take a great interest in selection of the officers charged with conducting its affairs and the business management of the COAST ARTILLERY JOURNAL. The results were most gratifying and we desire to thank all those who rendered valuable assistance in distributing, collecting and forwarding the ballots. As was to be expected, the slate prepared by the committee appointed for this purpose was elected by an overwhelming majority; in fact it was almost unanimous. Only a few scattered votes were cast for individual officers not included in the slate. The new members of the Association elected for the period January 1, 1936, to December 31, 1938, are:

For Vice President—Colonel Francis H. Lincoln, C.A.C.

Members of the Executive Council—

Lt. Col. R. S. Atwood, C.A.C.
Lt. Col. C. M. Irwin, C.A.N.G.
Major LeRoy Lutes, C.A.C.
Major John Caswell, C.A.-Res.

A brief statement concerning the status of these officers was published in the November-December, 1935 issue of the JOURNAL and need not be repeated here. Sufficient it is to say that all of them are well known Coast Artil-

lerymen thoroughly interested in the welfare of the Association. They can be relied upon to do everything possible to promote its interest and to advance the welfare of the Coast Artillery Corps. The officers whose term of office expired on December 31, 1935 are:

Colonel H. E. Cloke, C.A.C., Vice President
Colonel W. H. Carpenter, C.A.C.
Brig. General H. H. Morehead, C.A.N.G.
Lt. Col. E. E. Bennett, C.A.C.
Lt. Col. H. P. Newton, C.A.-Res.

These officers have earned the thanks and gratitude of all members of the Association. We are sorry to have them separated from the official family, but a rotation in office is desirable, and conditions of service and change of station make it necessary to have a rotating Executive Council.

While the foregoing are no longer active members of the Council, we are sure that if the occasion demands they will willingly give of their time and talents in the interest of the Association and the Corps.

Death! Then What?

NO article published in the JOURNAL in recent years has elicited such a volume of favorable comment as the article by Captain J. H. Doherty, which appeared in the September-October, 1935, issue under the above caption. This article should not be passed over as light reading, but each officer of the military and naval service who has any regard for the welfare and well-being of his dependents should have a copy filed with his personal papers. Further than this he should take immediate action to complete, insofar as possible, the numerous forms, affidavits, and certificates that will be required in settling his estate, so as to insure that his dependents receive all the compensation to which they are entitled by law.

Numerous requests were received for permission to reprint this article. Usually the JOURNAL is more than willing to give such permission, but in this particular case it was not granted for the reason that the JOURNAL has published it in pamphlet form, copies of which may be obtained for a nominal charge of 25c. Commenting upon this article, the Editor of *Our Army* stated in part as follows:

> "I am glad that your Association has seen fit to bring out Captain Doherty's article in pamphlet form because it certainly belongs right where you say it does 'with the vital statistics of each officer.' Also, I think a copy should be in the records of each Company and similar unit of the Regular Army as well as in the hands of each Adjutant and Chaplain. It should have the largest possible audience in the regular service. Personally I was much gratified to know that there was someone who had sufficient initiative to do just what you are doing. Everyone in the Army should be grateful for the opportunity you are affording them of acquiring this invaluable article for so little."

General Morehead, If You Please

IT is with pleasure that the JOURNAL announces the promotion of Lieutenant Colonel H. H. Morehead, formerly Commanding Officer of the 251st C.A. (AA), Calif. N.G., to the rank of Brigadier General, and his appointment to the important position of Adjutant General of California. This is a fitting reward for especially outstanding and meritorious service.

During the time that General Morehead was in command of the 251st the performance of this regiment reflected the ability, zeal, and fine leadership of its able commander. It will be recalled that for the past two years General Morehead was a member of the Executive Council of the U. S. Coast Artillery Association. Also just before he relinquished command, the 251st joined the ranks of the 100% subscribers to the JOURNAL—the fourth National Guard regiment to attain this distinction. May their star continue in the ascendency and the prestige of the regiment rise to greater heights. To General Morehead: our thanks and appreciation for his services to the Association and the JOURNAL and our congratulations on his well merited promotion.

Reserve Officers Association Sponsors National Defense Week

IN 1934 the Reserve Officers Association of the United States sponsored what was known as National Defense Week. This patriotic move was so well received that it will be repeated during the period February 12-22, 1936. General MacArthur succinctly stated the objectives of National Defense Week when he said that its purpose is "to disseminate accurate information concerning the fundamental features of our national security problem." Millions of citizens of the United States are either vaguely antipathetic to or passively disinterested in the subject of National Defense and know little or nothing about the necessity for adequate preparedness. Without in any way tending to create a militaristic national consciousness, it should be possible to fully inform the people to the end that they may have a more comprehensive understanding of the armed forces of the nation, their composition, their mission, and the needs for thorough efficiency.

National Defense Week aims to demonstrate that preparation for defense is the right and duty of any people, and that peace will rest with the nation who neither provokes nor fears other nations.

Through the coöperation of the Army, Navy and National Guard, parades, reviews and demonstrations will be arranged. Veteran and patriotic organizations

all over the country will join with the Reserve Officers Association in an effort to bring to the public a clearer understanding of the relation between adequate defense and permanent peace.

The Reserve Officers Association solicits the coöperation of all patriotic groups of citizens to the end that National Defense Week in 1936 may be productive of definite results in the campaign for a defense which will truly defend in time of need.

War Records of the First Corps of Cadets

THE November-December, 1935, issue of the COAST ARTILLERY JOURNAL carried an interesting article concerning the right of the 245th C.A., N.Y.N.G. to streamers for Revolutionary War service. This article ended with an Editor's note to the effect that if the colors of any other regiment were entitled to wear the Revolutionary War streamer the JOURNAL would like to have the opportunity of announcing it to the world. This notice brought forth the desired result and Major Raymond D. Fales, the Historian of the 211th C.A. (AA) (First Corps of Cadets, Mass. N.G.) immediately called our attention to the fact that the history of this organization probably ante-dates that of any other National Guard regiment. It now appears that the 211th is entitled to the following streamers:

REVOLUTIONARY WAR

Rhode Island, 1778
New Jersey, 1780
Yorktown, 1781

CIVIL WAR

North Carolina, 1862, 1863

WORLD WAR

Lorraine
Ile de France
Champagne-Marne
Aisne-Marne
St. Mihiel
Meuse-Argonne

From this point on we will quote Major Fales' letter:

"The Independent Company of Cadets who as Massachusetts Militia participated in the Revolutionary War in an expedition to Rhode Island in April-May, 1777, organized and officered the Cadet Regiment, its commander Lieutenant Colonel Henry Jackson became its Colonel. This regiment known as, 'Col. Henry Jackson's 16th Continental Regiment of the Massachusetts Line,' Cadet Regiment, and it was mustered out as, 'Jackson's Continental, or First American Regiment of Infantry' being the last regiment of the line to be mustered out, June 20, 1784. This regiment served at Valley Forge, Pennsylvania; Quaker Hill, Rhode Island; Providence, Rhode Island; Morristown, New Jersey; Springfield, New Jersey; West Point, New York; Highlands of the Hundson, New York; Long Island, New York, and at Yorktown, Virginia, until after the battle of Yorktown, October 19, 1781. It will be noted that our present organization the 211th C.A. (AA), First Corps Cadets M. N.G., is the only National Guard outfit authorized to carry the Yorktown streamer.

"When enlistments were authorized by resolution of Congress on June 3, 1784, part of the above regiment reënlisted in the first unit of the United States Army as First Regiment of United States Infantry, later the 3d United States Infantry.

"The Independent Company of Cadets who organized the Revolutionary War regiment continued as Militia through the war and served at Dorchester Heights in 1777, and during a second expedition to Rhode Island in 1778. This custom of having two units in service during major wars, was followed at the time of the Civil War and also during the World War. This dual service was originally established in 1745 when the Independent Company of Cadets, Lieutenant Colonel Benjamin Pollard, commanding, organized and officered a company to serve in the French and Indian Wars under Sir William Pepperrell at the siege of Louisburg.

"The Coat of Arms was approved October 19, 1922, being one of the first so approved by the Historical Section of the War Department. The Cadets were organized prior to July 4, 1728, and served as a bodyguard to Governor William Burnet of the Province of Massachusetts Bay, although the first date claimed was October 16, 1741, which was the date of the Charter of the organization signed by Governor William Shirley. This charter is in our possession at the First Corps Cadet Armory, Boston.

"No National Guard organization in the country has a fraction of the personal historical data as is contained in the museum and archives of the Cadet Armory, nor can any unit show the continuity of service furnished, due to the peculiar dual nature of this unit. A cordial welcome is extended to any COAST ARTILLERY JOURNAL friends who may visit Boston to call at the First Corps Cadet Armory where many articles of military historical interest can be seen."

Fifth Division History

THE Society of the Fifth Division, Veterans of the World War, has recently brought out a complete history of this Division covering its record from organization to disbandment. Anyone interested in this history may obtain detailed information by communicating with Mr. William Barton Bruce, 48 Ayrault Street, Providence, Rhode Island.

COAST ARTILLERY BOARD NOTES

SECTION I

Projects Completed Since Last Issue of the Journal

PROJECT NO. 1003-A—DRILL CARTRIDGES FOR 3-INCH ANTIAIRCRAFT GUNS.—A large number of shots per gun per minute is one of the factors essential for antiaircraft armament. Fire control that will cause these shots to be hits is another question. The ability to fire rapidly presupposes many long hours of drill by gun crews. Rounds of antiaircraft ammunition are heavy and clumsy. As everyone knows, good dummy ammunition is essential for effective drill. Reports indicate that there has been considerable trouble throughout the service with these drill cartridges. Extractors have been broken, and the rims of the cartridges become so "chewed up" that they injure the hands of the men who have to handle them. A contributing cause seems to be that the round sticks in the bore of the gun, and considerable force is required to remove it.

To assist in overcoming this, the Chief of Ordnance constructed a drill cartridge with a spring inserted between the base and the body of the cartridge. The Board tested cartridges with and without springs. If the cartridge could be prevented from sticking there was no more difficulty with the latter class than with the former. It was found that most of the sticking was due to the fact that the cartridge was deformed; some were found to be decidedly "out of round." In some instances the cartridge case had been bent; that is, the axis was not a straight line. After such malformed rounds were put in a lathe and turned down, no further difficulty was experienced. The Board in its report recommended the retention of the solid base drill cartridge and further recommended that instructions be issued covering the testing of dummy projectiles for roundness and straightness, and for the correction of those found defective.

PROJECT NO. 1021-A—SPONGE STAVES, 155-MM. GUNS.—In the case of fixed guns the battery commander has ample space to stow the long rods and staves used in cleaning the bore of the gun. The 155-mm. gun is comparatively long, and a staff long enough to permit of cleaning the bore, with some length left for handholds, is unwieldy and difficult to transport. Furthermore, there have been many other complaints concerning the cleaning, ramming, and greasing devices furnished with this armament. The Chief of Ordnance has made up a new set of cleaning and ramming devices, including a jointed staff, and submitted this to the Board for test. In general, each of the new devices was found to be a great improvement over the corresponding device previously issued. It is hoped that the standardization of this equipment will relieve battery commanders from improvising so much matériel for the services of the piece. The Board recommended that eyes be placed both fore and aft on each head that is designed to pass the entire length of the bore, so that the head can be used as a "pull-through" and a rope can be substituted for a staff.

PROJECT NO. 1023—PORTABLE KITCHEN, GASOLINE-BURNING.—The test of this unit was completed during November. The report submitted coincides, in general, with the statement made in the last issue of the JOURNAL. That report included a recommendation for standardization after minor modifications and suggested a basis of issue.

PROJECT NO. 1025—SHIRTS, FLANNEL, OLIVE DRAB.—Fifty flannel shirts were tested by the Board over a period of nearly a year. These shirts were plain weave, two-ply worsted, all wool, and were found to be a great improvement over the woolen shirt of World War issue. It was found that the new shirt does shrink and, of course, different methods of laundering produced different degrees of shrinkage. A man can wear a shirt that is too large, but he cannot comfortably wear one that is too small. Of course the best appearance is presented by a new shirt neither too large nor too small. As a compromise, it was suggested in the Board's report that woolen shirts, in general, be issued, when new, one size larger than a perfect fit with a view to providing a fair degree of good appearance and comfort throughout the life of the shirt.

PROJECT NO. 1031—DIAPHRAGM GAS MASK, E3R139.—The Board tested these masks with both old and new telephone equipment, and arrived at the conclusion that improvements in the mask were well within the limits of feasible construction. Accordingly, its recommendations were against standardization, and included suggestions for improvements in the new model.

PROJECT NO. 1047—KITCHEN TENT.—This tent was received rather late in the season and little opportunity was available for giving it an actual service test. However it has been tested sufficiently to warrant a favorable report; this included recommendations for certain minor changes which were thought to promise improvement without adding materially to the cost, weight, or shipping volume of the tent.

PROJECT NO. 1050—RADIO DIRECTION FINDER.—As stated in the last issue of the JOURNAL, the Board has been issued five radio direction finders for test. These were similar in design to instruments that had been tested before and found not to be entirely satisfactory. The Chief of Coast Artillery therefore approved the Board's recommendation to omit this particular test. Recently the Board submitted a report covering the desirable military characteristics of such an instrument, and, it is hoped that these requirements will not be beyond the possibility of modern development.

PROJECT NO. 1053—FREQUENCY METER SET, SCR-211-T1.—A test of this device was completed during November. It was found to be an excellent instrument, and the Board is of the opinion that it is a very necessary piece of equipment for the Coast Artillery. The report included suggestions for a few minor changes, recommendations for standardization, and a proposed basis of issue to troops.

SECTION II

Projects Under Consideration

PROJECT NO. 953—RADIO-CONTROLLED HIGH-SPEED TARGET.—Taking the words of this title in order, work so far has resulted in a high degree of perfection of radio-control, and high speed has been attained. However, the boat has not yet been used as a target. Seasonal bad weather is upon us, and other duties are pressing the Board personnel. The principal problem yet to be solved is to render the target sufficiently visible at long ranges.

PROJECT NO. 1027—MESS TABLES.—This project is one involving a test over a period of one year, and nothing can be added to the statements appearing in the last issue of the JOURNAL.

PROJECT NO. 1038—STORAGE OF RUBBER-JACKETED SUBMARINE MINE CABLE.—This is a service test being conducted in several harbor defenses. The test is to extend over a long period of time, and no reports of particular importance have yet been received.

PROJECT NO. 1039—DATA TRANSMISSION SYSTEM T-11.—This is a system designed to transmit fire control data from the plotting room to the guns of a fixed battery. Its installation at Battery Montgomery, Fort Monroe, is nearing completion. The Board is to test this mechanism. The test is also concerned with the action of two particular lots of powder. The coördination of the two tests, preliminary drill of troops with the transmitting system, as well as the probability of bad weather, may be expected to delay this test for a month or more.

PROJECT NO. 1040—BLANKETS, WOOLEN, O.D. M-1934—No blankets of this new model have yet been received.

PROJECT NO. 1042—MOTORCYCLE REQUIREMENTS—COAST ARTILLERY CORPS.—As stated in the last issue of the JOURNAL, several reports have been received as to the need for motorcycles in the Coast Artillery Corps. The opinions expressed are decidedly divergent. A Board report on this subject will either be a compromise, pleasing no one, or it will be thoroughly distasteful to those on one side or the other of the argument.

PROJECT NO. 1044—MACHINE GUNS, M1, CALIBER .22.—This gun is still being used by one of the organizations at Fort Monroe. No serious study of the subject has been made, but preliminary reports indicate that the organization commander is finding some use for this small caliber gun in his indoor training. It can be stated that the general feeling is that the gun will be required to show decided advantages before the Board can recommend that another piece of mechanism be added to the property of an already over-loaded antiaircraft unit.

PROJECT NO. 1046—ANTIAIRCRAFT MACHINE GUN FIRE CONTROL METHODS AND EQUIPMENT.—This test is the Board's main effort for the immediate future. All plans make way for a test next Spring to include every scheme for controlling machine-gun fire that appears to present any possibility of being a success. A large part of the personnel of the Board, together with a fair percentage of the personnel of the Harbor Defenses of Chesapeake Bay, will move to Fort Story early in March to attack the problem of blending matériel and methods, in a search for the most effective means of destroying aerial targets by machine-gun fire.

PROJECT NO. 1048—DEVICE FOR GREASING GUNS (BROWN).—This device was described at some length in the preceding issue of the JOURNAL. The Board is having the local Ordnance officer make some modifications. It is hoped to give the device a preliminary trial in the very near future, but the weather is cold (in fact colder than is to be expected in this particular region). The temperature of the gun and air affect the viscosity of the grease, and the action of the device is decidedly dependent upon this feature. Guns are ordinarily greased in warm weather with a view to their remaining in good condition during cold weather. Therefore, a conclusive report cannot be rendered until tests have been made using warm grease in a warm gun.

PROJECT NO. 1049—FIELD JACKETS.—These garments were described in the previous issue of the JOURNAL. They are being tried out from time to time, and the informal reports so far received have been generally favorable.

PROJECT NO. 1051—TIME-INTERVAL APPARATUS EE-85-T5 AND ASSOCIATED EQUIPMENT.—A time-interval device was submitted to the Board some time ago for test. Some features immediately noticed were considered to be

fundamental defects. The instrument was returned to the Chief Signal Officer. Another instrument, with the above-mentioned features eliminated, has been received. Preliminary examination of the apparatus by the Board, and limited use by personnel of the Coast Artillery School, indicate that it is an effective piece of mechanism. It has been issued to one of the organizations (TD) at Fort Monroe, Va., for service test.

PROJECT NO. 1052—COAST ARTILLERY MEMORANDUM NO. 16.—This is the annual publication setting forth the results of the year's target practice. Now that the target year coincides with the calendar year, the season is closing just as these notes are written. The reports for almost all target practices fired during the year have been received. For the time, the Board is laying aside all other work, and is concentrating on making recommendations to the Chief as to classifications of all batteries, nominations for the Knox Trophy, and comments concerning individual practices. The Coast Artillery shoots at "anything that is in heaven above, or that is in the earth beneath, or that is in the water under the earth"; therefore, there are numerous classifications and tabulations. The much maligned scoring formulae afford the principal means of comparing these units whose missions differ so widely. It is most difficult to assess the relative merits of an organization that fires submarine mines, and one that "picks up" airplanes with searchlights. It is like attempting to compare the skill of a surgeon with that of a portrait painter.

Verifying the computations and the score of every practice, classifying organizations with respect to the excellence of their practices during the calendar year, and selection from the outstanding units of the one believed most deserving of the award of the Knox Trophy, is a laborious and time-consuming process. The 3-inch antiaircraft gun firings of 1935 proved so much better than those of previous years that for the mathematical treatment of their scores (to fix the dividing line between "Excellent" and "Very Good"), all practices fired prior to 1935 had to be disregarded; otherwise, more than half of the practices fired with this type of armament would have been reported "Excellent." Those whose 1935 practices resulted in scores which, in 1934, came within the "Excellent" category, should not be over-confident of an "Excellent" rating, for this year (1935) the pace is much swifter and the competition keener.

PROJECT NO. 1054—TELEPHONE BOX, EE-91-T1, AND ASSOCIATED EQUIPMENT.—Only part of the matériel for this test is on hand. It is understood that this matériel was designed to replace and bring up to date nearly every feature of the standard fire control telephones for fixed emplacements. Much of the equipment on hand indicates considerable change from the old model.

PROJECT NO. 1055—PAINT PRIMERS FOR SEACOAST GUNS.—Two different kinds of paint primers, designed to replace red lead as the coat of paint next to metal of guns and carriages, have been submitted to the Board for test. These are being applied to 155-mm. guns in the Harbor Defenses of Chesapeake Bay. A test of this kind naturally extends over a long period. Preliminary reports on the primers actually applied are to the effect that these paints are very satisfactory. How long they will stand up, how well they will protect the metal, and how they will retain the coats of outside paint, are features yet to be determined.

PROJECT NO. 1056—SOUND-POWERED TELEPHONES.—The sound-powered telephone is one that requires no outside source of electrical energy. Some time ago the Board reported adversely on such telephones for Coast Artillery use. That report was based on the supposition that such telephones could not be an improvement over the electric-powered telephones; that they probably could not be made to meet all requirements, and that electric power for other purposes would always be available around any Coast Artillery installation; moreover, another kind of telephone would needlessly complicate the supply list. All of this new equipment has not arrived, but it is believed that the arguments enumerated will apply regardless of the nature of the matériel to be submitted.

PROJECT NO. 1057—EXPERIMENTAL FLANNEL SHIRTS.—Another shipment of fifty flannel shirts has been received by the Board for test. These shirts differ in material and design from those mentioned under Project No. 1025. The new ones are of serge weave, composed of 80% wool and 20% cotton. They are of good appearance but as they were only recently received and issued to individuals, no worth-while report can be made at this time.

PROJECT NO. 1058—SPOTTER T5.—This device is to be used in applying corrections for antiaircraft gun fire. The mechanism is intended to be inserted in the fire control system, near the junction box, in the line from that box to the director. Its function is to permit the introduction of spotting corrections as determined at the battery; it is supposed to be most useful when the director is in a concealed position, or is well removed from the battery. The unit has not been tested.

THE FOREIGN MILITARY PRESS

Reviewed by Major Alexander L. P. Johnson, Infantry

ARGENTINA: *Revista Militar*, April, 1935.

BRIEF STUDY OF A PLAN OF A.A. DEFENSE, by Captain Ernesto von Pfyffer, Air-Res.

The radius of action of modern aviation converts the entire country of a belligerent nation into a zone of aerial operations. It follows that the danger from the air is proportionate to the susceptibility of a country to hostile air invasions and its own inability to block or to repulse them. Moreover, this danger may become acute even before a formal declaration of war. Although an efficient intelligence system should be able to discover indications of probable aggressive action in ample time to give warning, it should be borne in mind that a well-organized air force is always ready to strike at a moment's notice. There should be no hesitancy or delay on the part of the government to declare the existence of a state of aerial danger. Such a manifesto should require the civil authorities to put into effect simple preventive measures. The military should participate only to the extent necessary to assure correct application of technical details. Such action could not be construed as warlike or provocative. Neither could measures of increased vigilance along the frontiers, passport restrictions, or limitation of the freedom of movement along the border be regarded as hostile acts. On the contrary, such measures should have a beneficial effect on diplomatic negotiations and serve as deterrents to any hostile act of aggression.

The proper preparation of the "civil" phase of antiaircraft defense presupposes a proper mental preparation of the populace to the end that it may fully appreciate its own responsibilities. The idea must be driven home that the longer peace prevails the less will it be possible to guarantee its continuance. Furthermore, they must reconcile themselves to the fact that some day, when they least expect it, they shall be confronted with war. The successful indoctrination of the people at large must be accomplished by a well-organized propaganda embracing all existing means of public education.

The peace-time zoning of cities in order to facilitate antiaircraft defense is a matter of paramount importance. Vulnerable zones should be free of storage tanks of illuminating gas, water reservoirs, industrial plants essential to the conduct of war, hospitals, prisons, railway stations, public markets, and the like. These facilities should be distributed throughout sparsely populated suburban areas. Those now located in the vulnerable urban areas should be removed as rapidly as possible. This can be accelerated by means of special inducements. Municipal authorities must bear the responsibility for carrying the provisions of the civilian phase of the antiaircraft defense plan into effect.

The purely military features of the antiaircraft defense plan are necessarily secret. Military intelligence plays an important part in the organization of this defense but when relations with another country become strained the rôle of this agency becomes vital. Indeed the efficiency with which it fulfills its mission may decide whether or not the country is spared the dire consequences of aerial surprise.

CUBA: *Cultura Militar y Naval*, August, 1935.

A short while ago the new Cuban army, now a little over two years old, entered the field of military journalism with an attractive monthly magazine devoted to military and naval subjects. It is well-edited, rich in content, attractive in appearance, profusely illustrated, and its aims are in strict conformity with the best traditions of the profession of arms.

The press bureau of the Cuban G.H.Q. is responsible for the publication of the magazine. Its editor-in-chief is Captain Ismael Bravo, M.M. *Felicitaciones!*

AUSTRIA: *Militärwissenschaftliche Mitteilungen*, August, 1935.

THE CAVALRY CHARGE AGAINST INFANTRY NEAR TRYNCZA, by Captain Karl Scheff, Cavalry Reserve.

During the retirement of the Russian armies before the Austro-Hungarian counter-offensive in October, 1914, the Austrian 6th Cavalry Division bivouacked in the vicinity of Brzoza Krolevska. At this point the division commander was able to turn over his original mission to the cavalry of the 3d Infantry Division. Thereupon he decided to advance to the south along the San River in order to cut off the retreat of the Russian forces that were operating in front of the II Corps.

The movement began at 6:00 A.M., October 10. The division marched in two columns, but owing to a heavy fog, contact was soon lost. By 10 o'clock the east column was within 1½ kilometres of the small Wislok River bridge near Tryncza. At this point the advance guard spotted a column of infantry marching on a neighboring highway and headed for the same bridge. The low visibility made it impossible to determine whether these troops were friends or foes. Therefore the division chief of staff and one officer galloped forward far enough to identify the column and determine its strength. The chief of staff saw, to his amazement, two companies of Russian infantry plodding stolidly down the road. Immediately he launched his advance party against the column. The commander of the support squadron, in emulation of his energetic chief, also ordered the charge. The Russian column was taken by surprise. The mounted officers managed to escape, but the remainder of the command, some 270 officers and men, surrendered. The

squadron that made this charge numbered but 90 men. The action lasted only three minutes.

The incident is cited to show that even in the World War mounted attacks succeeded under favorable conditions.

GERMANY: *Militär Wochenblatt*, September 4, 1935. 1935.

MILITARY-GEOGRAPHICAL ASPECTS OF THE FRANCO-SOVIET ALLIANCE, by Captain Pickert.

Russia's nearest point of contact with Prussia is southwest of Minsk—a distance of about 300 kilometers. The Russian South Volhynian frontier is some 500 kilometers from German Silesia. Even in this age of motors these distances are sufficiently formidable to render Utopian any thought of German aggression against Soviet Russia. It seems unbelievable that either France or Russia would give credence to any report of alleged German plans of aggression against Russia, whether by air, sea, or land. Although Minsk is within the radius of action of German aviation, an attack on that town would have no effect whatever upon Soviet Russia. Not even an attack on Moscow would accomplish anything.

On the other hand, intimate relations between Russia, Lithuania and Czechoslovakia would probably enable Soviet aviation to operate from the territories of these states. The danger of a land attack by the Red army against Germany is remote. Railway and road conditions are no better today than in 1914. The enterprise would tax an army as severely as it did in the World War. The problem of supply also would present great difficulties. The author dismisses the Soviet navy from consideration.

A neutral Poland would serve as a breakwater against the Soviet tide. However, should Poland consent to the transit of the Red army, she would become a base for Soviet propaganda and Bolshevism, and would eventually be absorbed by the Soviet Union.

In the light of geographical considerations alone the Franco-Soviet alliance is difficult to understand. In the author's opinion, it must be attributed "to French mania for pacts and craving for security, while the Bolsheviki look upon it hopefully as a means for pushing the world revolution westward."

————*Militär Wochenblatt*, September 11, 1935.

THE U. S. INFANTRY SCHOOL, by W.

This is an interesting summary of the antecedents, growth and mission of our Infantry School at Fort Benning, which the author consistently designates as Fort Bennington. "Formerly," he writes, "the infantry was a very much neglected arm of the United States army. However, the establishment and development of The Infantry School at Fort Benning placed that arm at a much higher level, and its position will continue to improve in proportion to the number of its officers who are graduates."

HUNGARY: *Magyar Katoni Szemle*, March, 1935.

TEAM WORK BETWEEN INFANTRY AND TANKS, by Lieutenant Fieldmarshal Charles Gerbert.

The author presents some interesting ideas in connection with the employment of tanks in the frontal attack, and more especially in a penetration. In his opinion, teamwork between infantry and tanks is equally essential on the march, in the approach, and during the initial stages of the attack. For example, he points out that the elimination by tanks of strongpoints and combat groups in the hostile outpost area during the approach of the infantry will materially facilitate the approach, and reduce the amount of time it would otherwise require. The author believes that, during the approach, and initial stages of the attack, light tanks would play the principal rôle. During the assault and subsequent action within the hostile position, the heavier type of tanks would assume the lead. To illustrate his idea, the author divides the hostile position into three zones. Zone A includes the front-line company and battalion supports and reserves, and the bulk of the infantry weapons. Zone B includes the regimental (brigade) C.P.'s and reserves, while Zone C takes in the reserve battle position, including divisional reserves and the bulk of the divisional artillery. The author estimates the average depth of zone A at 500 meters; of zone B at 1,500 meters, and zone C at 3,000 meters. The total depth of a defensive position occupied by a division is thus estimated at about 5 kilometers. Although the effective range of modern field artillery would permit a much greater depth for the organized defense, the author believes that a greater depth would actually result in a corresponding loss in the effectiveness of the artillery support. In his opinion, an energetic defender would be disinclined to accept such reductions in the effectiveness of his artillery.

The author points out that the bulk of tanks in every army are of the light variety. In his opinion, this type of tank will provide the principal support for the "infantry attack." He emphasizes "infantry attack," because an attack might be made with normal or motorized infantry, with cyclist or mounted formations. The tank platoon, the author states, is the generally accepted tactical unit. It may consist of five tanks, three tanks, or a single tank according to type. Thus the light tank battalion has 45, the medium 27, and the heavy 9 tanks. The tank battalion is normally the largest tactical unit, although light tanks are normally organized into regiments of two battalions. There are likewise some tank brigades and even larger commands, but these are mixed commands. In these cases, according to British opinion, the proper proportion should be one small, two light and one medium tank battalion. The British discarded the heavy type tank altogether; the French dropped the medium tank.

Tanks normally attack in several waves or lines with a normal interval of 50 meters between tanks, and a depth of 100 meters between waves, or 200 meters, more or less, between lines. A tank battalion, the author states, is gen-

erally accepted as adequate support for a division. If we assume that a tank battalion attacks with two companies in the first wave, their support platoons will follow in the second wave, while the third company, in battalion reserve, will attack in the third and fourth waves. In such a case the zone of action will have a width of about 1,000 meters, or the normal zone of action in the attack of a regiment. By adding the third company to the first wave, and by increasing the interval between tanks about 50 per cent, the front might be expanded to 2,250 meters, equal to the front normally covered by two regiments, or the normal zone of action in the attack of a three-regiment division making the main effort. The author notes that such a disposition of the tanks, would, according to generally accepted views, materially weaken the main blow and seriously jeopardize the chances of obtaining decisive results. This, the author adds, inevitably leads to the conclusion that tank support is indispensable and that a tank battalion is the minimum that should be attached to a division, irrespective of the nature of its mission. The author disagrees with this theory on the ground that it would result in a frittering away of tanks, since, in some sectors, the nature of the terrain would obviously preclude their effective employment.

In the author's opinion, a frontal attack cannot be decisive unless it results in a penetration. Penetration is not, however, an objective in itself. Its tactical value rests entirely upon the fact that it breaks up a continuous strong defensive front and thereby provides the necessary flanks for envelopment. The ultimate decision results from the combined effect of the penetration and the subsequent envelopment. In order to provide a basis for success the gap produced by the penetration must be at least seven to eight kilometers wide, or approximately the frontage required by three divisions. Such a frontage would necessitate seven or eight light, three medium or heavy, and three small tank battalions, a total of 380 light, 81 medium, or 27 heavy, and 135 small tanks. This is approximately equal to the tank force employed by the British at Cambrai. The author visualizes the execution of the attack as follows: in course of D-1 day the infantry assisted by light and small tanks will capture the hostile outpost position; then, under cover of darkness, the infantry will seek to establish itself as close to the hostile front line as possible along the zone of attack and in the adjacent sectors. There the infantry will dig in. During the night immediately preceding the attack two assault divisions enter the line relieving flank elements of the division already there, which then becomes the center of the attack. This is exactly what was done by the 1st and 2d U. S. Divisions entering the line near Soissons on the night of July 17-18, 1918, relieving flank elements of the 1st Moroccan Division, which became the center of the hammerhead of the Allied offensive on July 18. The tanks, the author continues, assemble in groups under cover behind the assault wave of the infantry. The attack will be preceded by a short but powerful artillery concentration against the hostile front line. The artillery will lift in conformity with the progress of the tanks to the far boundary of Zone C. There the artillery will lay down a fan-shaped box barrage around the attacked position.

The tanks attack in two lines—the first line consisting of six light and two medium tank battalions, the latter being in the sector of the main blow. The second line will consist of two light and one medium tank battalion. The center of the second line, the author believes, would advance along the axis of the main effort. Each line will attack in four waves of two or three battalions each. Small tanks allotted to the various groups by companies would form a fifth wave. The tanks will cross the line of departure at maximum speed, traverse the hostile artillery barrage, the beaten zone of the enemy's antitank guns, and enter the hostile position. In the author's opinion the attacking infantry will not be able to assist the tanks. The supporting artillery, however, may render some assistance by neutralizing enemy batteries. The success of the penetration will depend upon the ability of the tanks, the author states, to put *hors de combat* the enemy's rearmost batteries. The attacking infantry will enter the hostile position as the tanks break down resistance. In the author's opinion, infantry will seldom be able to launch its attack from a line of departure within 100-200 meters of the hostile front line. As a rule it will have to pass through the hostile artillery barrage. The neutralization of this fire, therefore, assumes paramount importance. For that reason, the author believes, the fire of supporting artillery should be shifted upon prearranged signal by tank units rather than on a time schedule. The infantry must jump off directly behind the tanks, if possible simultaneously with the last wave, depending largely upon the intensity of the hostile barrage. The important thing is, the author points out, to gain rapidly as much ground as is possible. Once past the enemy's artillery barrage, the attack will probably progress rapidly along the center with a gradual slowing down towards the flanks.

In the author's opinion, tanks should not stop anywhere for any length of time. Assembly points for reorganization must be designated in advance, and should be near readily recognizable terrain features. The author believes that the first tank wave should reach the near edge of Zone C within the enemy's position in about 15 to 20 minutes, or approximately three times the normal time distance. At the same moment the assault infantry should enter Zone A prepared to assist the tanks in reducing hostile resistance within the position. By this time, the author believes, the first line of tanks will have used up all company supports, and part of the battalion reserves.

In the author's opinion, it would be quite accidental if the attack struck the front of a single division in defense. As a rule, the blow will strike portions of the front held by two divisions. Thus, we must reckon with the presence in Zone C of 12 to 15 batteries, 4 to 5 reserve battalions, and an unknown number of tanks, although the latter

should not be large, at least for a time, if the attack comes as a surprise. Enemy division commanders, after the receipt of initial reports, would remain completely in the dark regarding the situation within Zones A and B. Reports percolating through adjacent units will not dissipate this fog of uncertainty. Signs of withdrawal, the author believes, will not become apparent. A few cyclist or mounted messengers may escape the destructive action of the attacking tanks, but the defending infantry, although it may offer stiff resistance, will be unable to retire. Here and there, the author thinks, glimpses of the action may be had, but the rapid progress of the action will soon obliterate the enemy's O.P.'s.

JUGOSLAVIA: *Pešadisko-Artileriski Glasnik*, May-June, 1935.

DEFENSE AGAINST LOW-FLYING AIRPLANES BY ELEMENTS OF THE ADVANCE GUARD OF AN INFANTRY REGIMENT, by Lieutenant Miliyan G. Drashkovitch.

Experiments conducted by infantry indicate that riflemen firing at low-flying airplanes are more effective than light or heavy machine guns. This fact emphasizes the importance of instruction in this type of firing. Moreover, the ability to use his rifle effectively against low-flying airplanes will tend to enhance the self-confidence and morale of the infantryman.

It is the duty of every commander to organize the antiaircraft defense of his command. Men with keen eyesight and an acute sense of hearing should receive special training as lookouts. These should be able to recognize different types of military planes by sight as well as by the sound of their motors. Since the probable direction of an air attack cannot be anticipated, lookouts should be posted in pairs to the front, the rear and both flanks of a command at distances from 500 to 1000 metres. An effective system of alarm signals is as important as rapid observation and identification of hostile aviation. The alarm may be given in appropriate situations by means of sirens, whistle or bugle signals or the discharge of a rifle. Visual signals may likewise be used effectively.

The fire of the rifle-squad or larger units can be employed successfully against airplanes. The normal advance guard of a regiment consists of a battalion with one battery of artillery, a howitzer platoon, communications and pioneer platoons. One rifle company with one platoon of machine guns may well be assigned the duty of protecting the command against low-flying airplanes. The advance-guard commander is responsible for the proper organization of his own antiaircraft defense. The advance party and support commanders send out their lookouts. Upon signal of approaching hostile aircraft troops take to cover. Designated rifle squads and machine guns, marching about midway between column and lookouts, at once open fire at hostile planes flying at an altitude of 1,500 metres or less, and they will keep up the fire until the planes pass beyond reach. When the march is resumed new squads should be detailed for antiaircraft defense. As a rule halts should not be ordered except where shelter against aerial observation is available. Provision must be made for the protection against aircraft of bridges along the route of march to prevent delays which might result from their destruction.

U.S.S.R.: *Krasnaya Svyezda (Red Star)*, No. 161, 1935.

MILITARY INTELLIGENCE.

The repeatedly well-informed official organ of the Red army reports that the U. S. infantry division has the largest number of automatic weapons of any division in the world. According to the informant of this worthy periodical, our infantry division has a complement of eighty 75-mm. guns, twenty-four 155-mm. howitzers, thirty-two 81-mm. mortars, a total of 136 artillery pieces. Our division, moreover, has twenty-four 37-mm. howitzers, 265 heavy machine guns, 80 antiaircraft machine guns. The 23,033 men of our infantry division carry 8,467 rifles, 1,320 automatic rifles and 12,501 pistols. Unfortunately, the source of this interesting bit of information is not named. *Spaceebo tovarish*—thanks for the information.

The December issue of *The Fighting Forces* is notable for a fine battle study from the facile pen of Lieutenant Colonel A. H. Burne. This time Colonel Burne analyzes the dramatic operations that took place between Ctesiphon and Kut in the spring of 1915.

From one point of view the battle of Ctesiphon may be epitomized by the following passage from the *British Official History:*

"Thus ended the battle of Ctesiphon, where the number of occasions on which the respective commanders took important decisions on incorrect intelligence was exceptional. Whether the result might have been otherwise, if either or both commanders had been in possession of more accurate information, is a question for the military student to discuss."

Indeed, this battle was rooted in mutual misconception: "The British *underestimated* their opponents by fifty per cent; whereas the Turks *over*estimated their opponents by the same percentage." Such distorted intelligence was bound to give rise to curious situations and this it did. As a result, the Ctesiphon campaign is a gold mine for the military student. In particular does it stand as one more warning to those of "Napoleonic" inclination who are happy only in intricate combinations and complex schemes of battle.

COAST ARTILLERY ORDERS

(Covering the period November 1 to December 31, 1935)

Colonel A. J. Cooper, from instructor, Army War College, Ft. Humphreys, to member General Staff Corps, War Department, July 1.

Colonel Clifford Jones, from 4th C. A. District, Ft. McPherson, to member General Staff Corps, War Department, June 2.

Colonel F. H. Lincoln, assigned to duty as Assistant Chief of Staff G-2 War Department.

Lieutenant Colonel Robert Arthur promoted Colonel, December 20.

Lieutenant Colonel R. P. Glassburn, promoted Colonel, November 1.

Lieutenant Colonel H. K. Loughry, promoted Colonel, November 1.

Lieutenant Colonel J. D. McCain, from the Philippines, to 62d, Ft. Totten.

Lieutenant Colonel R. M. Perkins, from Office Chief of Coast Artillery, to member General Staff Corps, War Department, July 1.

Lieutenant Colonel W. E. Shedd, Jr., promoted Colonel, November 1.

Major D. M. Cole, to Walter Reed General Hospital, for observation and treatment.

Major D. R. Norris, from 63d, Ft. MacArthur, to duty as assistant P. M. S. & T., University of California, Los Angeles.

Major A. E. Potts, promoted Lieutenant Colonel, November 1.

Major J. deB. Walbach, from the Philippines, to instructor, North Carolina National Guard, Wilmington. Previous orders amended.

Captain A. D. Amoroso, from 6th, to 63d, Ft. MacArthur, December 1.

Captain Edward Barber, from 2d, Ft. Monroe, to instructor, C. A. School, Ft. Monroe.

Captain J. R. Burnett, removed from detached officers' list.

Captain H. H. Duval, from the Philippines, to 63d, Ft. MacArthur.

Captain F. J. French, from 2nd, Ft. Monroe, to the Philippines, sailing New York, March 14.

Captain P. W. George, detailed with Org. Res. 1st Corps Area in addition to other duties.

Captain C. O. Gunn, from 69th, Ft. Crockett, to Hawaii, sailing San Francisco, March 5.

Captain R. H. Kreuter, removed from detached officers' list.

Captain F. H. Koerbel, from San Francisco port of embarkation to Ft. Oglethorpe, for assignment to duty as assistant to the quartermaster.

Captain G. J. Loupret, from 13th, Ft. Barrancas, to University of Maine, Orono.

Captain W. C. McFadden, from 52d, Ft. Hancock, to 7th Ft. Hancock.

Captain S. H. Morrow, from 13th, Ft. Barrancas, to the Philippines sailing New York, March 14.

Captain A. B. Nicholson from 63d, Ft. MacArthur, to the Philippines, sailing San Francisco, April 7.

Captain D. G. Pamplin, from 69th, Ft. Crockett, to the Philippines, sailing San Francisco, April 7.

Captain W. L. Richardson, from 2d, Ft. Monroe, to the Philippines, sailing New York, March 14.

Captain C. Q. Shelton, from the Philippines, to 6th, Ft. Winfield Scott.

Captain J. W. Smith (PS), from the Philippines, to 2d Corps Area, Governors Island, pending retirement.

Captain E. B. Thompson, from 52d, Ft. Monroe, to instructor, C. A. School, Ft. Monroe.

Captain L. H. Thompson, promoted Major, November 1.

Captain M. W. Tracy, from 2d, Ft. Monroe, to Ft. Sam Houston, revoked.

Capt. H. J. Vandersluis, from 14th, Ft. Worden, to 6th, Ft. Winfield Scott.

Captain T. P. Walsh, transferred to Finance Department and report to Commanding General, 5th Corps Area for duty as finance officer.

Captain J. L. Whelchel, transferred to Quartermaster Corps, October 17.

Captain A. J. Wick, from assistant to quartermaster port of embarkation, Brooklyn, to assistant to quartermaster, Ft. Ontario.

Captain F. J. Woods, from 6th, Ft. Winfield Scott, to the Philippines, sailing San Francisco, April 7.

Captain W. L. Wright, removed from detached officers' list.

First Lieutenant G. N. Adams, from Hawaii, to 6th, Ft. Winfield Scott.

First Lieutenant C. C. Cloud, Jr., from 13th, Ft. Barrancas, to 4th, C. A. District, Ft. McPherson.

First Lieutenant E. F. Cook, transferred to Signal Corps, November 6.

First Lieutenant A. L. Fuller, Jr., removed from detached officers' list.

First Lieutenant A. C. Gay, from the Philippines, to 2d, Ft. Monroe.

First Lieutenant O. J. Levin, from student in Regular Course, C. A. School, Ft. Monroe, to 52d, Ft. Monroe.

First Lieutenant J. R. Lovell, removed from detached officers' list.

First Lieutenant G. F. Peirce, from the Philippines, to 3d, Ft. Stevens.

First Lieutenant P. A. Roy, from 52d, Ft. Hancock, to 7th, Ft. Hancock.

First Lieutenant C. M. Snyder, from 14th, Ft. Worden, to the Philippines, sailing San Francisco, April 7.

First Lieutenant Arnold Sommer, from the Philippines, to 62d, Ft. Totten.

First Lieutenant W. F. Spurgin, from Hawaii, to 3d, Ft. MacArthur.

Second Lieutenant A. W. Betts, from 62d, Ft. Totten, transferred to Corps of Engineers, Ft. Belvoir.

Second Lieutenant P. N. Gillon, from 41st, Ft. Kamehameha, to Ordnance Department, Hawaii, November 30.

Second Lieutenant C. C. Haug, from 63d, Ft. MacArthur, to Corps of Engineers, November 25.

Second Lieutenant J. N. Howell, from Air Corps, Randolph Field, to 63d, Ft. MacArthur, Calif.

Second Lieutenant V. H. King, to Hawaii, sailing New York, March 14. Previous orders amended.

Second Lieutenant R. C. Leslie, to 13th, Ft. Crockett. Previous orders amended.

Second Lieutenant J. H. Lewis, resigned.

Second Lieutenant S. McF. McReynolds, Jr., from 69th, Ft. Crockett, to the Philippines, sailing San Francisco, April 7.

Second Lieutenant R. L. Matteson, from 14th, Ft. Worden, to the Philippines, sailing San Francisco, January 22.

Second Lieutenant E. W. Moore, from 6th, Ft. Baker, to the Philippines, sailing San Francisco, April 7.

Second Lieutenant W. R. Murrin, from 52d, Ft. Hancock, to 7th, Ft. Hancock.

Second Lieutenant E. W. Niles, from 13th, Ft. Barrancas, to Corps of Engineers, 13th, Ft. Belvoir.

Second Lieutenant H. F. Turner, from 2d, Ft. Monroe, to Hawaii, sailing New York, February 11.

Second Lieutenant W. E. H. Voehl, from 62d, Ft. Totten, to Hawaii, sailing New York, February 11.

Second Lieutenant R. B. Warren, from 6th, Ft. Winfield Scott, to the Philippines, sailing San Francisco, April 7.

Second Lieutenant Y. W. Wolfe, to Panama, sailing New York, February 11. Previous orders amended.

Second Lieutenant P. H. Wollaston, from Air Corps, Randolph Field, to 63d, Ft. MacArthur.

Master Sergeant C. P. Jacobs, 14th, Ft. Worden, retired, November 30.

Master Sergeant J. G. Kelly, retired, Ft. Monroe, November 30.

First Sergeant George Cameron, 13th, Ft. Crockett, retired, December 31.

First Sergeant Houston Chitwood, 15th, Ft. Kamehameha, retired, November 30.

First Sergeant L. J. Glendennin, 63d, Ft. MacArthur, retired, December 31.

First Sergeant I. M. Hull, 14th, Ft. Worden, retired, November 30.

First Sergeant W. S. Hundley, 63d, Ft. MacArthur, retired, December 31.

First Sergeant, Roy Mason, 2d, Ft. Monroe, retired, December 31.

First Sergeant Robert Mutters, 2d, Ft. Monroe, retired, November 30.

First Sergeant Frank Novarra, 14th, Ft. Worden, retired, December 31.

First Sergeant W. C. Phelps, 69th, Ft. Crockett, retired, December 31.

First Sergeant John Robison, 13th, Ft. Crockett, retired, November 30.

First Sergeant C. V. Williams, 51st, Ft. Monroe, retired, November 30.

First Sergeant Chester Young, 14th, Ft. Worden, retired, December 31.

Sergeant H. C. Blodgett, 62d, Ft. Totten, retired, December 31.

Sergeant B. C. Gudzinski, 3d, Ft. Stevens, retired, December 31.

Sergeant Adalberto Salgado, 14th, Ft. Worden, retired, December 31.

Wear the U.S.C.A.A. Insignia

Official emblem to be worn on civilian clothes, by officers of all components of the Army.

Bar is of bronze, gold-plated, center enameld red (for Coast Artillery), with panel of black and gold at ends designating an officer. Bar equipped with gold-plated shank back button. Illustration is actual size. Bar, is only part that shows, when worn. Neat and distinctive in appearance.

Lapel Bar and Lapel Ribbon Now Official U.S.C.A.A. Insignia

The new $\frac{3}{16}$" wide lapel ribbon comes in the same color combination as the lapel bar.

PRICES

One lapel bar	50c
12" length lapel ribbon	50c

COMBINATION OFFERS

Two lapel bars	75c
Two 12" lengths of ribbon	75c
One lapel bar and 12" length of ribbon	75c

Any combination of 50c items, totalling $5.00 or more, subject to 10% discount, when shipped to one address.

Send all orders to

The Coast Artillery Journal
1115 17th St. Washington, D. C.

Second Edition

Outlines of the

World's Military History

By Colonel
William A. Mitchell

Prof. of Engineering and the Military Art at West Point

From 1500 B. C. to 1918 A. D.
From Thothmes III to Pershing

Special de luxe Edition - - $3.75
Standard Edition - - - - $3.00

Order from

The Coast Artillery Journal
1115 17th Street, N.W. Washington, D. C.

THESE ARE NOT PAID ADVERTISEMENTS

BOOK REVIEWS

SECRETS OF THE WHITE LADY. By Captain Henry Landau. G. P. Putnam's Sons. 314 pages. $3.00.

Reviewed by 2nd Lieutenant John Stanley, MI-Reserve

From the great plethora of books on espionage which have appeared since the war there are two which stand out as authentic and valuable and intensely human records of the work of that unknown legion of patriots who served beyond the lines and who were soldiers as surely as those who stood in the mud of the trenches.

In *All's Fair* Captain Landau told us of himself and how he had gone to Holland, where he directed the military branch of the British Intelligence Service in occupied Belgium. In this second volume we hear further of his organization, of the fabled "White Lady," that legendary phantom whose appearance was to herald the downfall of the Hohenzollerns—the *White Lady* which was the greatest spy organization of the war.

The work of this group was not spectacular, but it was important. The reports of its train watchers were definite announcements of coming offensives and its identifications of enemy units were of inestimable value to the Allied Command. It is interesting to know, too, that it was through the *White Lady* that the Allies first learned of the Paris gun: a wounded soldier had hinted of it to his nurse who was not only a sister of the church but a soldier of La Dame Blanche. That was the beginning; later there was one agent who actually saw the now-famous gun.

Anomalous indeed is the fact that these Belgian men and women were actually enlisted as members of the British army. This was necessary, says the author, not alone because the War Office Service was the only one which could absolutely guarantee the transmission of the reports across the Belgian-Dutch border, but because the agents themselves insisted that they be militarized. Stranger yet is the character of those Belgian patriots who matched their wits against those of the German intelligence Service. Strange they were to all things military and strange to the adventurous life of a spy. There was Dewé, chief engineer of the Liege Telephone and Telegraph Company; Chauvin, professor of physics at the Institut Montefiore; Neujean, chief of police at Liege, and almost unbelievably, many priests—notably Father des Onays who was a professor of Latin at the College of Saint Servais. The religious societies were well represented and indeed the *White Lady* functioned almost as a religious order. "It was religious faith, patriotism, and the militarization which welded the *White Lady* together and exerted that inspiring influence on its members

which enabled them even when imprisoned and facing death to remain steadfast and loyal." Of its leaders three were priests and three were women; "the others were college professors, engineers, lawyers, and members of the professional class." Eventually they numbered over a thousand and of these eighty were priests and one hundred forty-four had university degrees. Together they mounted fifty-one train watching posts and countless post boxes and during the last few months of the war when enemy information was most needed the *White Lady* was able to function with a maximum of efficiency. "During this period vast troop movements were taking place night and day through the occupied territories, and not one of these, except those right in the fighting zone, escaped the invisible net which the *White Lady* had spun."

In evaluating this, consider that the field of activity of this company covered "the whole of Belgium and areas of Hirson, Fourmies, Avesnes, Charleville, Longuyon, Douai, Valenciennes, and Lille in occupied France. Itinerant agents covered this vast region "identifying divisions in rest, watching aviation fields, reporting troop movements by road and procuring every kind of military information they could collect. In addition to a network of train-watching posts in the areas mentioned, it also had posts in the grand Duchy of Luxemburg, and just before the armistice had succeeded in penetrating into Alsace. In fact every strategical railway behind the German Western Front between Verdun and the sea was covered by its train watchers." Such was the *White Lady*.

Aside from the account of his own organization Captain Landau has included other tales of espionage in Belgium and France. There are many stories of individual heroism—of Joseph Zilliox, an Alsatian who persuaded fifty of his comrades to desert the German army to fight for France, who, when he tried to enlist was delayed by French red tape, and chafing, returned to Liege to spy and to meet the firing squad—of Fauquenot and Creusen who continued their activities from a german prison—and, gloriously, of Leon Trulin, the youngest spy shot during the war—Leon Trulin who organized his friends and schoolmates (the youngest was but fourteen) into an espionage cell. . . . Upon a house in Lille there is a tablet asking "Those who pass by remember this hero" for there in a courtyard he was shot.

There is a chapter on the French soldiers hidden behind the lines in the Ardennes and a most excellent section devoted to the German Secret Police. Finally, there is an appendix which includes copies of the actual questionnaires and instructions which the British War Office sent in to their agents in occupied territory.

It is a splendid book; it is a saga of patience and intelligence and patriotic devotion. Beyond that it is a story of courage.

WITH PERSHING IN MEXICO, Colonel H. A. Toulmin. The author's experiences while a member of the Punitive Expedition. $2.00.

An Independent, Illustrated National Monthly Magazine for all Members of the Military Profession and Their Families.

Our Army

Registered U. S. Patent Office

EDITORIAL AND BUSINESS OFFICES:
160 JAY STREET, BROOKLYN, N. Y.

"This magazine is for the United States Army as a whole. It will not cater to either the officers or the enlisted men as a class, nor will it favor any one division or arm. It maintains that a well-trained, well-quartered, well-fed and well-paid Army is our best guarantee for peace; that the profession of arms is an honorable one, and that our Army deserves more consideration from the public than it receives."—Publisher's Declaration of Policy from the First Issue.

Subscription Rate: $3 for One Year (12 issues)

ORDER FROM

THE COAST ARTILLERY JOURNAL

1115 Seventeenth Street, N.W. WASHINGTON, D. C.

U. S. Army Regulation Sabers

Spartan—Blade, proved steel, heavily nickel plated, deep etching. Plain bone grip. Scabbard, steel heavily nickel plated. The saber we recommend for all officers.

When ordering state length desired or give height.

Price, f.o.b. factory $10.00

Presentation Saber. All silver or silver and gold plated. Prices and detailed description furnished upon application.

MINIATURE U. S. ARMY SABERS

Exact reproduction of the regulation saber, heavily nickel plated, can be furnished with plain or etched blade. A useful and practical gift as a letter opener.

Price—Ornamented Scroll blade . $1.50
Plain Blade 1.35

A charge of $1.50 will be made for etching name on blade of regulation saber or engraving name on scabbard of miniature saber.

Write for further information or place order with

The Coast Artillery Journal

1115 17th St., N.W. Washington, D. C.

THESE ARE NOT PAID ADVERTISEMENTS

An Ideal Present for the Boy

HERE'S REAL FUN
Plus Actual Pistol Training

By special arrangement with the manufacturer we offer you the famous bull's-eye pistol, the most accurate and inexpensive training pistol ever manufactured.

Through the simple medium of a No. 33 heavy rubber band, the bull's-eye pistol drives a No. 6 chilled shot with uncanny accuracy and speed. It's an easy matter to "kill" the celluloid birds (see cut) at twenty to twenty-five feet. Especially effective on flies or other small insects at slightly closer ranges.

Use this inexpensive bull's-eye pistol to keep your trigger finger in trim. You will get real fun plus actual pistol training. Order a bull's-eye pistol set today. The box contains three toy birds, extra No. 33 rubber bands, a supply of shot, and small die for stamping bull's-eye targets. And the cost is only $2.50 postpaid.

The Coast Artillery Journal
1115 17th Street, N. W. Washington, D. C.

Death! Then What?

By Captain J. H. Doherty, F.D.

It is time that you gave some consideration to your estate. It is not only good business to have your house in order but it is a duty that you owe to yourself and your dependents. This pamphlet contains important information and suggestions for the administration of an estate. Not only will it be of inestimable value to you in knowing what to do and how to do it, but it will be of even greater value to your widow or other dependents in settling up your affairs and in knowing how to receive all benefits from the Government in the way of gratuity pay, pensions, insurance, and a long list of related subjects.

You cannot afford to be without this concise and authoritative pamphlet printed in convenient size with heavy paper cover. A copy should be filed with the vital records of each officer.

Price 25c per copy, postpaid

ORDER FROM

THE COAST ARTILLERY JOURNAL
1115 17th Street, N.W. Washington, D. C.

THESE ARE NOT PAID ADVERTISEMENTS

THE WAR IN THE AIR. Vol V. By H. A. Jones. The Oxford University Press. 471 pages and 10 appendices. 21 maps in volume and 28 air raid maps in separate case. $12.00.

Reviewed by Major B. F. Harmon

Despite mechanical advances and theoretical developments, the principal source of study for the war of the future always must be past experience in battle and not present performance in peace time. The amount of detail included in *The War in the Air* as well as the authenticity of the basic data on which it is constructed, makes it probably the greatest source book arising from the war, dealing with air matters. As a reference text for air officers or antiaircraft officers it is indispensable.

Of particular interest to the antiaircraft officer is the scope of the present volume which embraces the 1917-1918 air raids on England, both by zeppelin and airplane. Each raid is further described by a map while the appendices contain a thorough analysis of the results from the viewpoint of both attacker and defender.

Of more general interest to the lay reader is the remainder of the volume. Herein we visit the so-called "side shows" of the war: Egypt, Darfur, Palestine, Mesopotamia, Macedonia, and the Mediterranean. In reviewing a previous volume by Mr. Jones we commented on the great lack of color in the presentation of so colorful a subject. It is pleasing to find the color in this volume. Even a search for the factual matter, which makes history, cannot completely hide the glamour inherent in the development of the air forces, and particularly is this true in the out of the way places where the war's "side shows" were fought.

GAS! THE STORY OF THE SPECIAL BRIGADE. By Major General C. H. Foulkes, C.B., C.M.G., D.S.O. London: William Blackwood & Sons, Ltd., 1934. $9.00.

No man is better qualified to tell the tale of England's chemical retaliation in the late war than General Foulkes, who planned, organized, raised, trained, and commanded England's secret gas unit, euphemistically christened "The Special Brigade." His story, though told in considerable detail, seldom descends to a mere recital of dates and events. Basically the volume is a well documented history of British gas experience from the first German attack at Ypres in 1915 to the end of the war. Though essentially historical, its real purpose is constantly apparent, i.e., to scout the unfounded and fantastic gas stories that flow in an unending stream from the yellow presses of every country.

General Foulkes has turned out a first-rate piece of work. It is a pity that the price is beyond most Army pocketbooks.—C.T.L.