COAST ARTILLERY JOURNAL

MARCH-APRIL, 1947

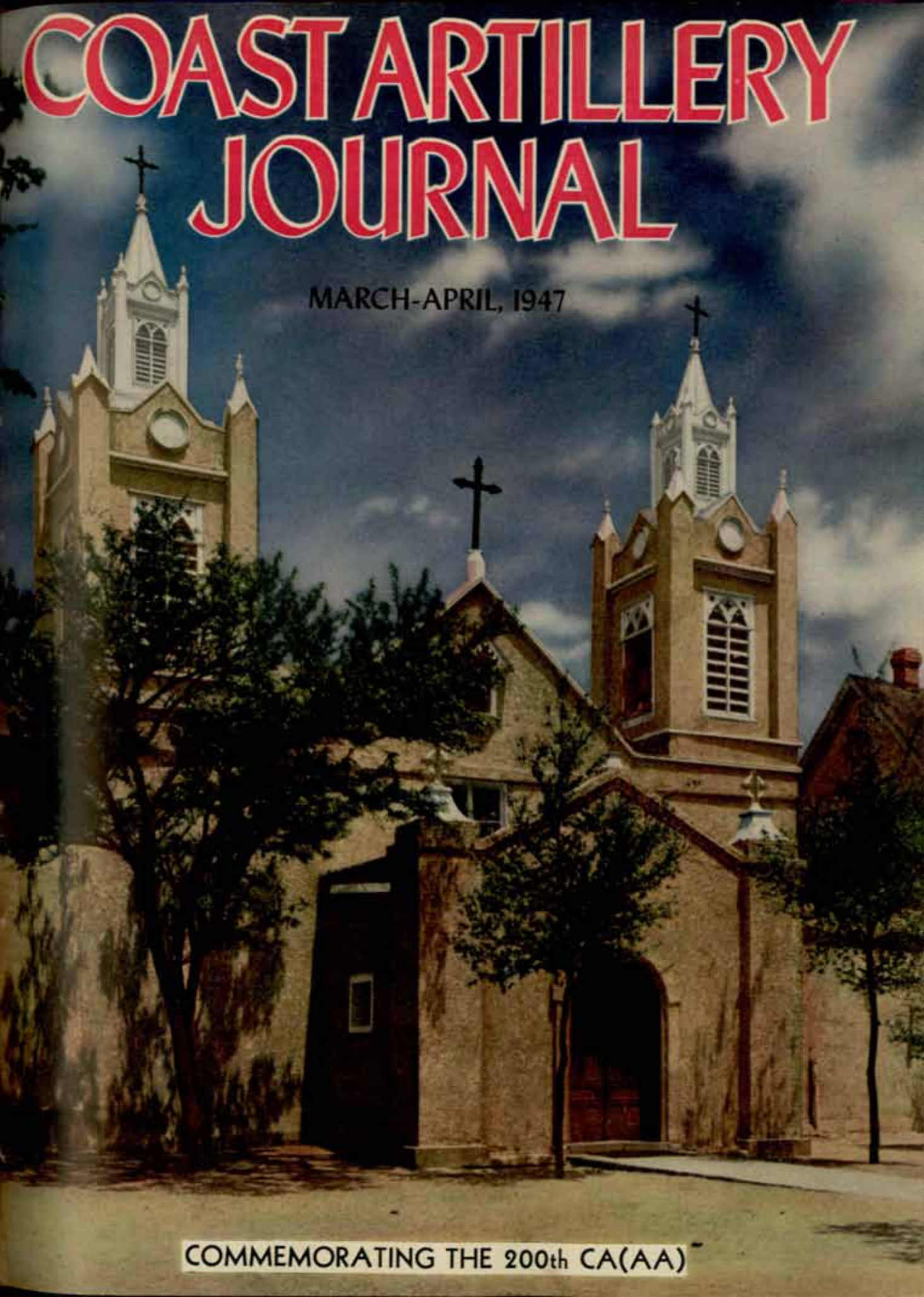

COMMEMORATING THE 200th CA(AA)

THERE is peace in the world this Easter because American fighting men staked their lives that peace might be won. One incident—and there were thousands like it—epitomizes their fortitude, the depth of their devotion.

Early in the Battle of the Bulge, snow, sleet and numbing cold accompanied the Panzer thrusts of the German armies. Our soldiers, at first outnumbered and outgunned, contested every inch of the frozen ground against the enemy troops and giant tanks that swarmed out of the icy fog. American skill and spirit stood firm in that stern test of human endurance, so much so that early in the battle, even before we could shift our forces to crush the attack, the outcome was foreshadowed.

A German parachute commander, captured by our infantry on the critical northern shoulder, gave the interrogators the first indication that, despite its initial advantage, the German assault was failing and their hopes were dimmed. His comment was: "You Americans are just too stubborn."

Those American were stubborn, refusing to admit defeat. Confident that their comrades along the whole great front would quickly rush to their support, they were sustained by memories of their soldier forefathers at Lexington and their soldier brothers on Bataan. Their spirit—the will to win—we celebrate during Army Week.

America pauses to salute those of her sons, living and dead, who have, through seventeen decades, guarded our national existence and earned us peace in which to live and grow and prosper, respected among the nations of the world, a champion of justice and freedom among men. Our veterans merit all the tribute a grateful nation pays them.

They have built into the structure of American life noble traditions that shall long endure, inspiring generations yet unborn to vigorous and sure faith in the capacity of this nation and its free people to meet every challenge. The deeds of our soldiers are a spiritual heritage that centuries shall not lessen.

We who are of the Army today are committed to a mission of security and peace. We shall succeed only insofar as we measure up to the spirit of those who served before us, and are supported by the American people. The spurs to great achievement are many as we are supported by the American people. Fresh in our minds is the memory of our comrades-in-arms who gave their lives and potent. Fresh in our minds is the memory of our comrades-in-arms who gave their lives in the desert and mountain, in the cities of Europe and in the Pacific jungles, in the skies and on the oceans of the earth. Watching us are millions of our fellows, who bore the brunt of war, now happily returned to their homes and families. All of them look to us that their sacrifice shall not be wasted. We must not fail. But, however firm our resolve or our strength may be for the task before us, the mission of enforcing the peace and securing our national safety depends on the American people's will that the job be done well and surely.

You, the people, are the final arbiters. So long as you understand these issues you will not relax either your vigilant care of national security or your firm demand that aggression be permitted no spawning space. Thus you will do your part to insure that all future Easters are peaceful ones. Of you, as of the brave men who stopped the Panzers in the Ardennes, it will be said: "You Americans are too stubborn" . . . too firm in your will for peace to dodge responsibility or to avoid sacrifices in maintaining it.

Dwight D. Eisenhower

DWIGHT D. EISENHOWER,
Chief of Staff.

COAST ARTILLERY JOURNAL

FOUNDED IN 1892 AS THE JOURNAL OF THE UNITED STATES ARTILLERY

VOLUME LXXXX | MARCH-APRIL, 1947 | NUMBER 2

CONTENTS

COVER: *Church in Albuquerque, New Mexico, Photograph by New Mexico State Tourist Bureau.*

THE LIFE AND DEATH OF THE 200TH COAST ARTILLERY (AA). *By Colonel Stephen M. Mellnik* 2

THE BEGINNING OF GUIDED MISSILE WARFARE. *By Dr. Ernst H. Krause* 8

DEATH TAKES A SLEEPING CITY. *By Lieutenant Colonel David B. Parker* 12

THE LAUNCHING OF GUIDED MISSILES. *By Dr. R. E. Gibson and Dr. A. Kossiakoff* 15

A STRONG AMERICA IS A PEACEFUL AMERICA. *By General Jacob L. Devers* 21

TRAINING OF RADAR OPERATORS. *By Lieutenant Colonel Leonard M. Orman* 22

BABY TAKES ITS FIRST STEP. *By Major Ralph M. Rogers* 28

WHO'S WHO IN THE ATOMIC RACE. *By Stefan T. Possony* 30

GUIDED MISSILE INSTRUCTION AT FORT BLISS. *By Colonel John H. Madison* 33

WARHEADS FOR GERMAN ANTIAIRCRAFT GUIDED MISSILES. *By Walter H. Wallace* 35

THE ARMY IN THE ARCTIC. *By Major Hal D. Steward* 37

AMERICA CAN BE MADE BOMB RESISTANT. *By Lieutenant Colonel William R. Kintner* 41

WAR DEPARTMENT SCHOOLS CHART 44

ARMY SEEKS BILL TO REVISE PROMOTIONS 45

AN INCIDENT ON SAIPAN. *By Lieutenant Laurence Sanders* 47

ABOUT OUR AUTHORS 50

"FLAK." *By Brigadier G. L. Appleton* 51

THE SOLDIER'S SOLDIER 54

INSTRUMENTATION FOR GUIDED MISSILES. *By Colonel Leslie E. Simon* 55

SEACOAST SERVICE TEST SECTION NOTES 57

NEWS AND COMMENT 58

COAST ARTILLERY NEWSLETTERS 64

COAST ARTILLERY ORDERS 72

BOOKS AND MANUALS 75

PUBLICATION DATE: April 1, 1947

Published bimonthly by the United States Coast Artillery Association. Editorial and executive offices, 631 Pennsylvania Avenue, N.W., Washington 4, D. C. Terms: $3.00 per year. Foreign subscriptions, $4.00 per year. Single copies, 75c. Entered as second-class matter at Washington, D. C.; additional entry at Richmond, Va., under the Act of March 3, 1879. Copyright, 1947, by the United States Coast Artillery Association.

giment as

The Life and D
Coast A

HISTORICAL BRIEF

In the spring of 1940, the 111th Cavalry of the New Mexico National Guard was converted into the 200th CA (AA) Regiment.

As such, the Regiment entered federal service on 6 January 1941 and trained at Fort Bliss, Texas until August of that year.

It arrived at Fort Stotsenburg, P. I. on 26 September 1941 and saw its first action on 8 December 1941 when it engaged Japanese bombers and fighters which attacked Clark Field.

On the night of 8-9 December, a cadre of 500 officers and men from the 200th moved to Manila. This detachment was designated the 515th CA (AA) on 19 December.

On 7 April 1942 the two regiments were combined into a brigade, designated as the Philippine Provisional Coast Artillery Brigade (AA).

The remnants of the Brigade surrendered to the Japanese with the Luzon Force on 9 April 1942.

th of the 200th
llery (AA)

BY COLONEL STEPHEN M. MELLNIK, GSC

This is the story of an antiaircraft regiment which made few statistical records but which fought, bled and died doing everything from shooting down Japanese planes to stopping Japanese Infantry assaults. This is the story of the 200th Coast Artillery, designated (AA), but actually Inf., FA, and finally POW.

For this regiment there was none of the fanfare and enthusiasm which accompanied units in victorious drives. There was only sweat, hunger and illness. The regiment developed no new techniques for the use of the M9 Director or the guns which fired themselves. At the time the regiment went through its siege, the historian will recall that the M4 Director was the latest in antiaircraft fire control matériel.

In its spare time, the regiment learned to forage for food, as its ration was limited to one-half pound of rice per man per day. For "recreation," the regiment went on scouting expeditions, hunting down Japanese snipers who proved an excellent source of tailor-made cigarettes.

It all started when the 200th CA (AA), New Mexico National Guard, under command of Colonel Charles G. Sage, was called into Federal Service on 6 January 1941. The regiment trained at Fort Bliss until 31 August 1941, when the press of events in the Far East and the lack of antiaircraft units in the area resulted in secret orders for the 200th to proceed west.

In the rush to get in shape for action, little time was available for training, and the regiment sailed for the Philippines without having had a target practice with any of its weapons. Arriving in the Philippines, it had the doubtful honor of being the only antiaircraft unit of any type in the Philippines (with the exception of the Corregidor garrison). Still in the antiaircraft tradition of undertaking overwhelming tasks, the Regiment assumed the defense of Clark Field, the only heavy bomber base on Luzon.

That such an installation required at least five times as

Brigadier General Charles G. Sage (left) and Colonel Harry M. Peck, Commanding Officer of the 515th CA (AA), photographed just before turning their backs on the Mukden Prison Camp to begin the long journey home.

much antiaircraft for its proper protection, fazed very few people, least of all the 200th. Placed under operational control of the Far East Air Force at Clark Field, the 200th was virtually on its own from that time on.

During the ten weeks of bedding down at Clark Field before the bombs began to drop, the 200th was able to unpack its equipment, get set in position, and had even planned for some target practice. Headquarters USAFFE, established in July 1941, was frantically trying to mobilize, equip and train an Army with which to stop the inevitable invasion. Of necessity, it could furnish the 200th with little direction and even less guidance. From the USAFFE point of view, any organization which had its quota of officers, men and equipment, was so far ahead of the Army being organized, that it could well shift for itself until more important problems were solved.

At about 0500 hours on 8 December, Manila time (about 1000 on 7 December, Hawaii time), the Regiment was alerted. Previously prepared gun positions were manned, and a period of waiting ensued. After several hours of waiting, with reports that enemy planes were over the Island of Luzon, the all clear was given about 1130 hours. About 1230 hours, Japanese bombers and strafing planes made their appearance, and the war for the 200th was on.

The 200th was no match for the 300 Japanese planes which flew in from Formosa. The high altitude bombing attack was well synchronized with the low flying strafers. The men dished out whatever they could but they took a lot more. When the smoke blew away from the muzzles, few confirmed planes had been shot down but quite a bit of the antiaircraft equipment had been punctured by bullet holes.

That was just the beginning. That night, it was realized that the City of Manila had no antiaircraft protection (an antiaircraft machine-gun platoon had been sent from Corregidor to Manila to protect the dock area). The regiment sent 500 officers and men to Manila to uncrate some antiaircraft equipment which had just arrived, and to establish an antiaircraft defense of the Manila area. Colonel Harry M. Peck, Executive Officer of the 200th, was in command of this group.

Getting into Manila at 2100 on 8 December, the detachment began to uncrate and assemble the antiaircraft equipment found in the dock area. The strange blacked out city with nervous sentries shooting at every vehicle that moved at night, added to the difficulties. Filipinos were hastily recruited, guns were dug in and in twenty-four hours were ready to shoot. On the morning of 10 December when 54 two-motored Japanese bombers flew over Manila, they were met with a pattern of antiaircraft puffs that was more spectacular than effective, as it was not immediately apparent that the planes were flying ABOVE the ceiling of the powder train fuzes.

These prisoners of war cheer at their liberation from prison camp at Cabanatuan.

Left behind when retreating Japs left Manila, another group of men captured on Bataan is liberated by U. S. Troops.

The trials and tribulations involved in trying to train Filipinos as searchlight crew members will be appreciated by anyone who has ever had a similar task. The Filipino's sublime disregard for a machine's limited servicing needs caused many a gray hair. However, to the Manila group of the 200th, this was merely preliminary training for the real test to come.

For the Clark Field element, there was another personnel cut in the offing. About 50 self-propelled three-inch guns had been unloaded in Manila about one week before the war started. (The personnel to man the guns eventually arrived in Australia.) On 9 December, the 200th was ordered to send 100 trucks and 200 men to man the self-propelled guns. The original 200th was now down to 1100 men, with its mission to protect Clark Field still unchanged.

For the next two weeks, the 200th and the Manila "Provisional Regiment of the 200th" were very much harassed. The organic regimental transportation had been reduced by 100 trucks, and the balance had to serve two regiments instead of one. The personnel for one antiaircraft regiment had been reduced by 200, and now had to man the equipment of two regiments.

At Clark Field, the Japs were making doubly sure that the Far East Air Force remain ineffective. Daily bombing and strafing met with only antiaircraft resistance. While there was satisfaction in shooting down Japanese planes, it was disheartening to watch the planes concentrating on gun positions and to know that no friendly planes were available to challenge the Japs. In addition, it seemed pointless to continue the defense of a field which had no operating installation. However, there was always the chance that plane reinforcements would arrive, and Clark Field was an excellent air base.

The confusion in the Manila area was further confounded by a desire on the part of every Filipino to become a member of the antiaircraft unit. At the approach of enemy planes, every resident of Manila who had a weapon promptly began to shoot. That the planes were flying at altitudes in excess of 20,000 feet did not, apparently, discourage the volunteer enthusiasts. This type of firing forced antiaircraft gun crews into foxholes more often than did Jap bombs.

Two weeks after the war began, the Japs started to make landings on Luzon, and their air effort over Clark Field and the Manila area was intensified. Soon the main Jap landing was made at Lingayen Gulf, and the decision was made to withdraw our forces into Bataan.

The parent 200th assumed the mission of covering the retreat of the Northern Luzon Force into Bataan, while the Provisional Manila Group, newly christened on 19 December 1941 as the 515th Coast Artillery (AA), assumed a similar mission for the South Luzon Force.

The successive withdrawals and deployments, to keep pace with the retreating forces, was a nightmare. The skeletonized 200th, covering the retreat of three Infantry Divisions, stretched Napoleon's maxim on "Economy of Force" to its elastic limit. No greater Economy of Force could have been made. By judicious use of the 24 hours in each day, and by dispensing with eating and sleeping, the 200th safely convoyed its three divisions into Bataan. "The impossible was accomplished yesterday!"

The 515th had a similar problem, though a bit more critical. The key to the successful withdrawal of the South Luzon Force lay in the cluster of bridges at Calumpit. If those bridges remained intact, the Force would get through safely, as the Japs in the south and east were still some distance away. Without the bridges however, a long detour of about 100 miles was in prospect; the alternate choice being to cross a 20-mile swamp.

The 515th arrived at the Calumpit bridge area to find that the Japs, too, realized the importance of the bridges in the strategy of the withdrawal. For about five days there was a bitter contest between Jap planes and the 515th. Due to its accurate shooting and the confused situation facing Jap pilots in the large cluster of bridge targets available for bombing, two key bridges were left unharmed, and our troops came through.

With the Infantry Divisions bedded down in Bataan, the 200th and 515th turned to the defense of the Cabcaben and Bataan airfields. While our available air force of six P-40s was inconsequential by present standards, it was most versatile. It performed bombing, photo, transport and pursuit missions, depending on the task to be done. As such, it needed and got all the protection it deserved. To the everlasting credit of the alert air force personnel (with help from the 200th and 515th), not one of the six P-40s was even damaged by the numerous Jap raids on the two fields!

As the war progressed on the Bataan front, a "friendly" Jap reconnaissance plane named "Photo Joe," began paying visits over the front lines. Photo Joe rarely dropped visiting cards but always after his visit, Jap artillery shells would blanket the areas which he had visited. To discourage Photo Joe's visits, two batteries from each of the regiments were ordered to the forward areas to greet the plane on its flights.

It would be gratifying, but not accurate, to say that upon the arrival of these batteries, Photo Joe's visits became less frequent. Napoleon's maxim of Economy of Force to the contrary notwithstanding, 37,000 yards of front was too much for four antiaircraft artillery batteries to cover with 100% effectiveness. However, the fire did force Photo Joe to be more cautious in his approach, and kept him at much higher altitudes than he cared to be. As for the Infantry units, the morale effect of an antiaircraft battery taking positive action to discourage enemy planes from coming too close was tremendous. In the war on Bataan, virtually all planes were enemy, and an antiaircraft unit was worth its weight in gold.

The next three months saw the situation deteriorate from bad to worse. While the Japanese air actions were sporadic in nature, the menace of malaria and dysentery was always present. The limited amount of quinine was soon consumed, and the malaria rate continued to climb. Cases in some units averaged 70% and there was no hope of replacements. Finally, malarial patients stopped going to the hospital, as they preferred to stay with their units, since the hospital had no medicine with which to work. The occasional shipment of quinine which came in via a private civilian plane which could fly to Cebu, was never enough for distribution to a regiment.

Food likewise became a serious problem. By February, the ration was limited to one-half a pound of rice per man per day, with a can of sardines split two ways for dessert. Soon, even the sardines ran out. Hunting for monkeys, iguanas and carabao became a necessity rather than a sport. In a short time, these edible animals became scarce, and snake hunting next became popular. Rice fields, abandoned by the natives at the outbreak of war, were taken over by the units and harvested. The areas were combed for edible fruits and vegetables.

The combination of hunger and malaria reduced the units to a state of apathy. There was little enthusiasm for the expeditions into the jungle which marked the unit's arrival into Bataan. The complete lack of mail from home was a strong factor in lowering morale. There were no movies, magazines or post exchanges; boredom, illness and hunger made this period a trying one. The front-line units were in even worse shape. They had no time for hunting, foraging or harvesting rice fields. In addition they had the ever-present hazard of an aggressive enemy constantly probing our lines. The sole source of commercial cigarettes was the infrequent Jap casualty caught behind our lines.

About 3 April 1942, the Jap had apparently received sufficient reinforcements with which to begin his drive down the peninsula. An intense concentration of Jap air and artillery fire was placed on our front line and the rear areas were under constant strafing and bombing attacks. To complicate the problem, we were at the end of the dry season, and Jap incendiary bombs literally burned out whole units. After two days of preparatory fire, the Japs commenced their infantry and tank attacks. On 7 April the combined Infantry and tank effort broke through our lines. Human beings could just stand so much and no more.

On the same day, the administrative machinery of USFIP finally formalized a situation which had existed for months—it organized the 200th and 515th into an antiaircraft brigade. Colonel Sage was given the command of the Brigade, while Colonel Memory H. Cain, the Executive Officer of the 200th, assumed command of the 200th. The life of the Brigade as an antiaircraft unit was short-lived. Within 24 hours, it was forced to destroy its antiaircraft equipment and to organize as an infantry unit with the mission of defending the line south of Cabcaben airfield!

The 24-hour life span of the converted Brigade saw chaos. Japanese Infantry units, paced by their tanks, were pushing through the break in the line like water through a hole in a dam. Disorganized Filipino units were clogging the single road leading to Marivales, while Japanese planes added to the confusion by spraying the road with machine gun fire. Human beings, weakened by hunger and disease, had but one thought—to get away from the slaughter.

The Brigade stayed anchored to its infantry position south of Cabcaben airfield while the Jap tanks ploughed through the line, interested only in exploiting the breakthrough. As the Japanese Infantry arrived, the Brigade firmed up forcing the Jap attackers to deploy. Over the noise of the planes and artillery came the sound of our ammunition dumps being blown up. It was the end! Within a few hours, orders were received from the Force Commander to surrender to the nearest Japanese unit.

After the surrender, the infamous "Death March" was followed by three and one half years of incarceration in Japanese Prisoner of War Camps.

It is difficult to assess the contribution of such a unit as the original 200th without becoming sentimental. In terms of 86 Jap planes shot down or so many Japs killed, there is a small degree of cold statistical comfort.

I met many men of the unit, during the war and in Japanese prison camps. Few men on Bataan will ever forget the unfailing good humor of the boys from New Mexico, their willingness to help out, and their cheerful acceptance of

impossible situations.

Colonel, now Brigadier General Sage, who took 1800 New Mexico men to the Philippines, and brought back but 1000, can look back with pride on the performance of the 200th at Clark Field and Bataan. His was the original responsibility for the formation and training of the units; to him should go the credit for its performance.

Colonel Peck can also look back with pride, and perhaps now with some amusement, at the difficult days in Manila when he had two weeks in which to organize an antiaircraft regiment with untrained Filipinos. Yet the efforts of his unit prevented the Japs from making a shambles of Manila in those early days of the war.

To Colonel Cain, whom I knew best, I take off my hat in tribute. With him will go the prayers of the men of the 200th who were with him at Camp O'Donnell, Cabanatuan and Davao. Colonel Cain, giving his can of sardines (the first can he had in months) to a dying member of the 200th, is something none of us will ever forget. The prayer meetings he held at a time when all hope seemed lost is another memory which will stay with all those who know him.

Let us not ever forget the 800 men of the 200th who lie buried on Luzon, Bataan and the various Japanese Prisoner of War camps. To those who came through alive; those who had the good fortune to know the 200th, will always remember their patience under adverse conditions, their uncomplaining care of each other, and the inevitable guitars which played a requiem to those who died.

General Wainwright, in paying his tribute to the 200th, said in December 1945:

"On December 7, 1941, when the Japanese unexpectedly attacked the Philippine Islands the first point bombed was Fort Stotsenberg. The 200th Coast Artillery (AA) assigned to defend this Fort, was the first unit in the Philippines under General of the Army Douglas MacArthur to go into action and fire at the enemy, also the first one to go into action defending our flag in the Pacific."

The quotation is a masterpiece of understatement.

The old 200th died at Bataan but its memory and deed live on, and from these recollections, a new 200th will undoubtedly be born. It is hoped that those men now in hospitals and others since released will recover sufficiently to form a nucleus for this new unit to keep alive and foster the traditions they established.

It is expected that it will be designated the 200th AAA Group and it is hoped that the members will wear with pride and distinction the Distinguished Unit Citation with two clusters which were so gallantly earned by the old 200th.

Members of the 200th released from Japanese prison camps enjoy a luncheon during a stopover on Oahu en route to the United States in September 1945.

The Beginning Of Guided Missile Warfare

By Dr. Ernst H. Krause

It was August, 1943. A British convoy was steaming through the Bay of Biscay on the alert for enemy submarines and planes. And then it happened! The observers of the ship saw what appeared to be a small dive bomber come out of a turn and head directly for the ship at an apparently incredible speed. The speed of the "plane" as well as the small target which it presented proved to be too big an order for what antiaircraft guns could be brought to bear on it in time. The ship was hit.

This incident marked the beginning of the long awaited and much dreaded guided missile warfare. Although devices which might be classed as guided missiles had been used previously, they were primarily makeshift weapons used in isolated instances. Here for the first time in the history of warfare were used, as we shall see later, several guided missiles which were designed for the job and were being produced in large enough quantity to be potentially lethal to the extent of having a serious effect on the course of the war. But for an intensive electronic countermeasure campaign by the Allies and certain design errors (from a countermeasure point of view) by the Germans, this might well have been the case. The actions which followed the first German attack are, I believe, representative of what will take place in one type of future guided missile warfare. Although the discussion which follows shows that the guided missile countermeasure job is a difficult one, it also shows that it is not always an impossible one.

The news of the attack in the Bay of Biscay, as well as several more which followed, soon spread among the ships which plied the Southern and Southwestern European waters. It bred terror in the hearts of seamen who entered the Bay of Biscay or the Southern Mediterranean. The average seaman was willing to take his chances with a submarine or airplane attack, for against these there were well proven defenses which gave him at least a fair chance of survival. But what defense was there against such a monstrous thing as a radio-controlled bomb?

It was obvious that fast action on the part of the Allied Navies was imperative. For, not only did this weapon have great potentialities against our ships but it was also the sort of thing which undermined the morale of the men who fight the ships.

Such an incident had been anticipated about six months before by a group working on guided missiles at the Naval Research Laboratory. We had been working on various types of radio control systems for our own use with a view to developing systems which could not be easily jammed or interfered with. A natural consequence of this work was the development of methods for testing the vulnerability of radio control equipment to jamming of various types. This led to speculation on what we might do to counteract the use of radio controlled devices by the Germans. That they were working on such devices was almost certain. But how could we build jamming equipment to counteract a completely unknown radio control system?

There was first of all the question of the frequency of the radio signals likely to be used to transmit the controlling signals to the bomb. Any one of thousands of channels might conceivably be used. The region of frequencies used for commercial broadcasting represented but a minute portion of the possible range of frequencies. In fact, it was more probable that the limitless expanse of the shorter wave lengths offered better possibilities for this use.

To find such a needle "in this ethereal haystack" was made even more difficult by the fact that most of the time it wouldn't even be there for the signals were transmitted only whenever the bomb was in flight and possibly only during part of the flight time. It was impossible to expect that while we turned the dial on an extended range receiver we would happen to be tuned to the transmission just at the moment it was on. Undoubtedly we would be listening to some other portion of the spectrum.

But even if we found such a signal which was controlling a bomb, we had to be able to tune a high powered jamming transmitter to exactly the same frequency. It was a difficult enough problem to build a high power radio transmitter which covers a frequency of 1 to 10 megacycles but the problem of building one to cover the range of a hundred times greater or more was absolutely staggering.

The idea was hit upon that perhaps the best way to attack this problem was to use the psychology of the old Indian tracker who apparently could track a man over solid stone ground. The secret of his success lay in the fact that whenever he had no tracks to follow he would ask himself the question, "Now what would I do in a similar circumstance if I were being pursued?" Using this method of attack, we asked ourselves what we might have done if a year or two ago we had been asked to freeze the design on a simple radio control system. The year or two mentioned here was, of course, the amount of time that would have been necessary

The German HS 293, a radio-controlled gliding missile with Jet Propulsion Booster Unit suspended below.

to put the equipment into volume production and train the necessary groups to use it after a practical design had been decided upon. On this basis and also on the basis of what little we knew about the Germans' activity in various portions of the radio spectrum, we decided that their first equipment would likely utilize a frequency somewhere between 15 and 50 megacycles. This narrowed the problem down far enough that a practical solution was possible.

The next question to be answered was how the enemy would be likely to use the radio signal to control the bomb. We felt it most probable that they would use a simple form of amplitude or frequency modulation of tones which could be interpreted in electrical apparatus in the missile as commands to turn, climb or dive, the simplest maneuvers required of a flying guided missile.

In line with these basic decisions, we proceeded to build jamming transmitters for preliminary tests under laboratory conditions which were capable of emitting high power signals over this relatively broad range of frequencies. But these transmitters differed from the usual broadcast transmitters in that they sacrificed the ability to stay at the same place on the dial (same frequency) for the ability to be set quickly to the frequency at which they were needed to deflect the falling bomb. For there would be much to accomplish in those 30 seconds or so that sudden death was hurtling toward you. First, you had to find and identify the signal out of the thousands likely to be on the air; then you had to find how he was using his radio signal to control; then set your jamming transmitter to exactly the same frequency as his to interfere with his control. If you still had time, you could fool the bomb by transmitting false control information to it to throw it off its course. Unless the first three parts of this could be accomplished in 30 seconds or less, the jamming would likely be too late!

With such a restriction in time as this, it was, of course, impossible to use any standard type of receiver for sweeping through the band by twisting the dial. To accomplish this detection process rapidly, we had to develop a series of broad band receivers in which a motor would tune the dial rapidly over and over. The signals thus received on any frequency would appear as pips (or vertical marks) on a horizontal line on a cathode ray tube. The position on the line would indicate the place on the dial where the "station" could be received. A combination of broad band and conventional receivers proved an effective and rapid means of finding a frequency to a high degree of accuracy. Other modifications allowed the same receivers to be used to adjust the frequency of the jamming transmitter accurately to that of the enemy control signal.

As far as the transmitters were concerned, it was impossible to get high speed tuning in any of the existing high powered transmitters because most of them utilized at least three or four different adjustments for tuning because of certain requirements such as, stability, long life, etc. We decided that only a single dial tuning arrangement could be tolerated. To attain this, we reached the conclusion that

we could forego some of the requirements such as stability.

Because of the pressure of so many war born problems, this countermeasure work had proceeded rather slowly on a low priority. However, at the time of the German attack in the Bay of Biscay we had available one broad band search receiver, one modulation analyzer, and one 50-watt jamming transmitter, all of laboratory experimental construction, besides the other necessary receivers.

Within 30 days after the first attack, the Chief of Naval Operations and the Bureau of Ships arranged to put at the Laboratory's disposal two destroyer escorts (DE) to be fitted with equipment to detect and record the signals of the so-far-unknown German radio-controlled bomb. Meanwhile, other attacks had taken place and an enterprising radio operator on one of the ships attacked had intercepted what he thought was the control frequency at 20 megacycles. A later analysis proved that he had indeed intercepted the signal, but because of the peculiar behavior of his receiver had obtained a frequency which was about one-half the true frequency. Fortunately, we stuck to our original guess of the frequency and equipped the ships with jamming equipment covering the wider range between 15 and 50 megacycles. The ships were brought into the Washington Navy Yard and after a period of about two weeks of night-and-day activity they were ready to sail with the best equipment we had available at the time. The most difficult problem at the last minute proved to be furnishing antennas which would cover such a broad band of frequencies efficiently.

Simultaneous with the fitting of the ships was the task of training Navy personnel to understand and operate the equipment. These men had the tremendous task of using equipment (which had been designed to be coddled in laboratory experiments) under full battle conditions. There had been none of the refinements that go into finished equipment for the fleet to make operation easier, for this apparatus was truly in the earliest stages of development.

On September 30, 1943, these ships set sail for the Mediterranean. The job of these crews certainly was not a pleasant one, in view of all of the reports that kept coming in about hits on more and more of our ships and the high percentage of hits with these bombs, but it was certainly an interesting one in that the problem reduced itself to one of matching wits with the enemy on the subject of electronics. Both the crews and we were a bit dubious about how successful a process this would be, but we were certainly going to make every effort to beat the enemy at his own game.

By the time the ships arrived in the Mediterranean, the approximate location of the air base from which the Mother planes took off was fairly well known. It was also known that the Germans were reserving the use of these new bombs for especially valuable targets. Therefore, they would not necessarily attack a convoy unless it was a large and important one. These known facts aided in the assignment of the two DE's to convoys on which they were sure to suffer an attack. On one of the first trips, the Germans turned out in force. They seemed to pick for their targets the specially equipped intercept ships, although they probably did not know their mission. The interception equipment functioned very nicely. During this attack the crew aboard the DE's had no difficulty locating the frequency of the German equipment. They resisted their natural anxiety to jam in order to obtain data on the commands used to steer the missile. As a matter of fact, they were successful in making phonograph records of the radio signal from several of the bombs. After these records had been made, they turned on their jamming transmitters, and there were indications in this first attack that the jamming transmitter functioned successfully. Since previous experience with the bombs had shown that quite a few of them went out of control for unknown reasons, it was difficult to establish if any given one was forced out of control by a jamming signal. One of the ships in the convoy was hit, but fortunately the DE's escaped any damage. On returning to port, the recordings were flown back to the Naval Research Laboratory to be analyzed. Meanwhile we had been building, on very high priority, two new transmitters with an output of one kilowatt each. These were flown to the Mediterranean and installed in the DE's.

The analysis of the recording brought out the essential points of the German system of controlling the bomb. It was, as we had suspected, an amplitude modulated system but it involved a method of operation which we had not anticipated. However, we were able to determine that the modulation with which we had equipped the transmitters was able to upset the operation of the system if the transmitters were properly tuned. Essentially, the German system of control was that the transmitter was modulated with either of a pair of tones. When one of the pair was transmitted, the bomb steered to the left and when the other was "heard" by the apparatus, it caused it to turn to the right. These tones were sent alternately, about ten times a second. Thus the apparatus was in a constant dither, first being commanded to go one way and then the other. If both of the commands were on for equal times, the bomb went straight. But if one was less insistent and the other more, it would turn in the direction of the stronger signal, the amount of the turn depending on the difference in insistence of the command. Another similar pair of tones controlled the angle at which the bomb was to glide, whether steeper or to a longer range. This allowed all of the control needed for a bomb of the type they were using.

By the time the Normandy invasion was in preparation, most of the aspects of the German system were known. The final details were obtained when several of the so-called HS293 glider-type bombs were captured after hitting a ship and failing to explode. These were pieced together first in

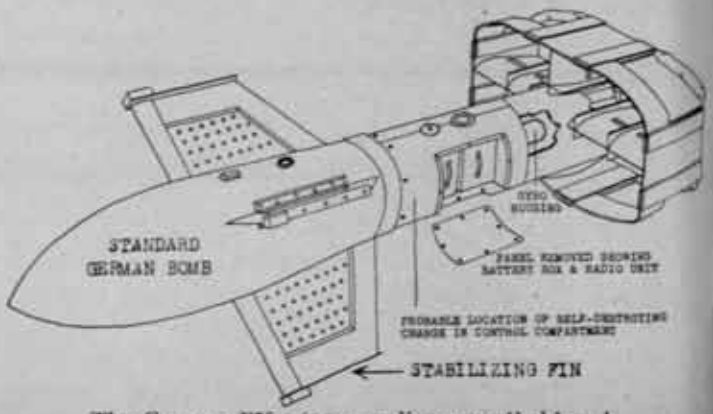

The German FX 1400, a radio-controlled bomb.

England and then here. The HS293 was a winged gliding missile carrying a payload of about 1000 pounds, below which was suspended a jet propulsion booster unit. The missile was launched from a Mother plane at a range of about 2,000 yards. A short period after launching, the booster unit was used to increase the speed of the missile to about 350 miles per hour. Control was effected by means of an operator in a Mother plane who used his radio control to keep the bomb, the target and himself always in a straight line. The general method of attack was for the Mother plane to come up on the target ship parallel to its course, launch the missile and have the radio controlled equipment make the necessary corrections.

Another of the German missiles used during this same period was of a considerably different type, but it utilized the same radio control mechanism. This so-called FX1400 was simply a specially designed bomb tail and a set of four stabilizing fins which fitted to a standard German bomb and the whole affair was used for high altitude bombing. The bomb would be dropped from the Mother plane from about 20,000 feet almost vertically on the target as in a normal high altitude bombing run with a bomb sight. Radio signals were used to make corrections in the aim. From a countermeasure point of view this was a far more potent weapon because the whole time of flight was on the order of 30 seconds, and hence there was only half the time to jam this one as there was for the glider type. Furthermore, since the bomb was falling almost vertically and had been initially aimed by standard bombing methods, it was likely to be very close to being on course. There was a possibility that the jamming, if not expertly done, might result in merely freezing the controls of the bomb so that it continued to fall onto its target.

It was anticipated that the Germans would make free use of these radio-controlled bombs during the channel invasions. To forestall their effectiveness, a total of 14 installations of guided missile countermeasure equipment were made on American Ships by the Naval Research Laboratory. They were installed on a crash basis under most unfavorable conditions while the ships rode at anchor in English Harbor between exercises. By this time, the design of the necessary receivers, transmitters, analyzers and antennas had been completed, but none of the equipment had been put into production. It was necessary that most of the equipment be fabricated on a unit by unit basis in the Laboratory and at several radio manufacturing concerns. Additional installations of a similar type of equipment were made in time for the landings in Southern France, later in the summer of 1944.

It is difficult to assess the success of the guided missile countermeasure campaign, but the over-all results were gratifying in so far as can be ascertained. Not a single ship in either of these invasions was hit by a radio controlled bomb although a considerable number of both types were used by the enemy.

The whole problem of radio countermeasures is primarily one of preparedness in general. The countermeasure engineer has to anticipate as many eventualities as he can and be prepared to act against the most likely group. Whatever the enemy can do electronically, can be undone by means of countermeasure electronics. The real deciding factors in this battle of wits are two: 1) Has the enemy had too much of a head start so that insufficient time is available to get countermeasure equipment into action? and 2) Is it economically feasible; that is, does the countermeasure require many times the expenditure in manpower and money that the countermeasure saves? If the enemy can develop a weapon so that either or both of these apply, then he has a very effective weapon.

In general, the Germans were very much countermeasure-minded during the war and made extensive preparations for counter-countermeasures. Their feeling that they were likely to be jammed led to a feeling of insecurity concerning all electronically operated equipment. This was reflected in the development of mechanical systems for controlling missiles which were pre-set before takeoff. Such controls were used almost exclusively in their later missiles, such as the V-1 and V-2.

A Strong America
Is a Peaceful America

Death Takes a Sleeping City

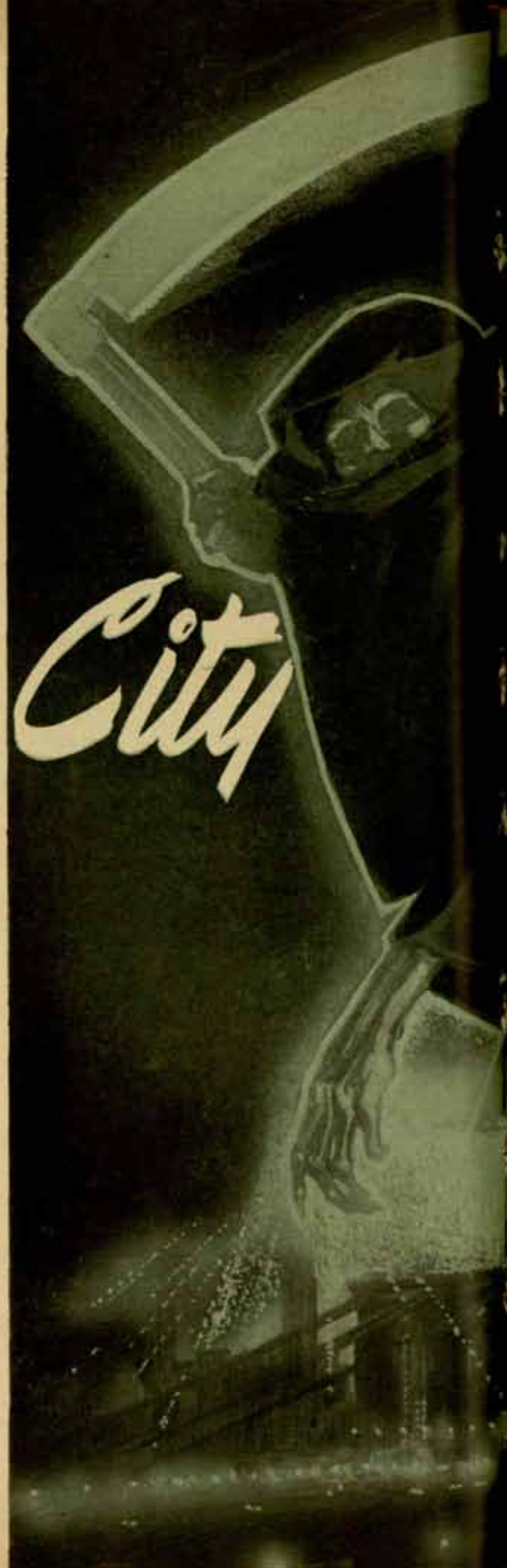

By Lieutenant Colonel David B. Parker, C.E.

Excerpts from some future historian's notebook:

At 3:30 on the morning of February 25th, 1952, Roger Jones, a textile importer living in lower New York, woke up with a violent, inexplicable attack of nausea, which lasted a quarter of an hour. When he went back to bed he noticed a thick mist blowing in at his window. This vaguely surprised him, for the night had begun clear, with a strong steady wind.

At 3:40 Ellis C. Manchester, Port Commissioner of New York, arrived at the waterfront with one shoelace untied. He had been routed out of bed by frantic, almost incoherent subordinates, who now met him at Pier 10. The end of the pier had been battered by a huge wave, and two motorboats lay crushed on top of the piling. In spite of darkness and a wet, drifting mist, he could see more damage farther up the Hudson. The excited men about him spoke of a great tidal wave caused by an earthquake far out at sea. As the Commissioner walked back to his car, he was overcome by a sudden attack of nausea.

At about the same time Dr. Hiram Strandberg, a Columbia University radiologist who often worked all night in his laboratory, noticed that the pointers of three of his radioactivity meters had moved clear off the calibrated dials. After a hurried check with instruments able to record higher

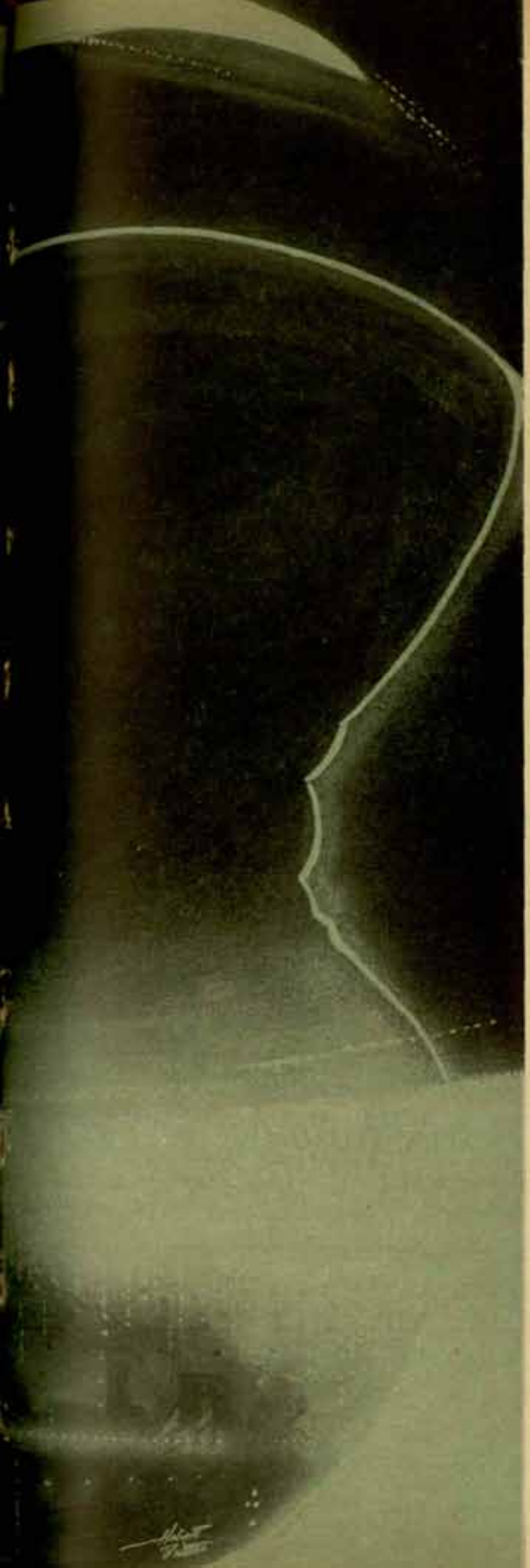

values, he telephoned his wife to wake their little boy and get out of the city at once. Then he called the police, the Mayor and Army Headquarters on Governor's Island. Some of those who answered were politely incredulous, others sleepily annoyed. Strandberg finally threw the telephone to the floor and rushed out. As he ran toward the subway he noticed the mist riding on a stiff southwest wind—a combination he had never observed before.

At four o'clock Dixie Turner, cook on the early shift at O'Grady's Cafeteria, turned off her alarm clock, slid out of bed, took a big red apple from the plate on the fire escape and munched it while she dressed. As she walked to work, she began to feel queer; on arriving she collapsed in a chair and was violently sick. Half an hour later she felt well enough to start up the coffee urn.

By five o'clock the Mayor's big room in City Hall was full of officials, newspaper and radio executives. Pale and unshaven, they listened to a group of scientists, among whom was the famous physicist and Nobel prizewinner Dr. Felix Novak, trying to outline a catastrophe that no reliable witness had actually seen.

Not until months later was the whole story of the disaster pieced together. An atomic bomb had been detonated deep in the waters of New York harbor, not far from the Statue of Liberty. Whether the bomb had been planted by a submarine, or lowered from some surface craft, was never determined. It exploded at exactly three o'clock, with a muffled roar noticed by few of the city's sleeping millions. The explosion sent skyward, a mile or more into the air, several million tons of water—not solid water, but a rainy mist of particles, each one of which was laden with radioactive fragments that shot forth deadly gamma and beta rays. The enemy had picked a night ideally suited to his purpose: a 30-mile wind was blowing from the bomb's bursting point straight up the long splinter of Manhattan Island. In less than an hour the lethal rain had fallen over the whole island. Although the intensity of the radioactive deposit varied greatly from block to block, death threatened everyone.

At 5:15 the Mayor put into effect "Schedule 99"—a detailed plan for the evacuation of New York which had been prepared some years before. Immediately orders and warnings flooded the air from all radio stations—until they were silenced by power failure caused by the flight of a few key powerhouse employees in improvised rafts across the East River. There were some other deserters, but all over the city firemen, policemen, national guardsmen and scientists remained at their posts risking the accumulation of an almost certain "graveyard dose" of gamma rays. The calmest people in the city were the scientists who had mustered New York's entire collection of Geiger counters—a pitiful 100 machines, where 10,000 would have been too few—and went about mapping the contours of infection and searching out spots that might be comparatively safe—for others.

Ten minutes after the news of the explosion reached him, Dr. Felix Novak had estimated the amount of radioactivity released. "Over the city's most heavily contaminated areas," he told the Mayor, "the average dose of gamma radiation is enough to be fatal to anyone who remains there more than three hours. In these cases, death will not occur for at least nine days—possibly not for six weeks, and there

will be no symptoms for two or three days. In a few places, people will get such a concentrated dose that they will be nauseated almost at once. These people will die within four days. The people who were able to get out of the city fast may lose some of their hair next week, or run a slight fever, but they will recover completely. Only the future can tell what the gamma rays will do to their descendants."

Dr. Felix Novak died on the ninth day after the disaster. But while his estimate of the radioactivity proved uncannily accurate, there were many who died in less than the minimum time he predicted for death from gamma rays. For neither he, nor the Mayor, nor the police, nor the young soldiers who wept as they fired into mobs, foresaw the chain reaction of hysteria which seized the inhabitants of New York as they tried to get off their narrow island. It was the worst panic in all human history. Thousands were crushed to death in subway stations, on bridges, in the tunnels under the rivers. After the first hour of the panic the city's exits were so clogged with wrecked cars and corpses that only a trickle of people—some of them swimmers—were able to escape. The trains that were in the city early that morning got out, with capacity loads. Many train crews heroically volunteered to return, and continued the evacuation until the city was nearly emptied and the panic had subsided. But these return trips often exposed the volunteers to the few additional minutes of radiation needed to tip the balance, and caused their deaths some four weeks later.

At the time of the explosion, there were over 2,000,000 people on Manhattan. According to figures, admittedly inaccurate, given out later at the Metropolitan Life Insurance Company's temporary headquarters in Boston, within six weeks 389,101 New Yorkers were dead or missing. Most of the survivors suffered from some form of radiation sickness. In addition, many thousands outside of Manhattan were stricken, particularly in Westchester County and the Bronx, and great numbers of them died. The casualties most distant from the explosion were in the upstate town of Watkins Glen, about 180 miles away, where the vagaries of the air currents unexpectedly dropped the last large concentration of fission products.

It took nearly a week to get all the living out of New York. No one will ever know how many died from causes other than radiation, how many drowned in the rivers, how many were killed in subways by contact with third rails, how many were shot as looters. Some shut themselves up safe from radiation in a steel bank vault, only to perish for lack of water and air. Others who stuck it out as long as they could in sub-basements picked up fatal doses when hunger forced them above the ground.

On March 6 a small party of bold scientists, Geiger counters in hand, threaded its way back through the invisible maze of death to retrieve precious documents. Gradually, as radioactivity on the city's walks and pavements and stairways and table tops decayed, more such raids were organized, some of them in lead-lined army tanks. A few attempts were made to drain off water in plumbing systems, but the task was given up as hopeless, and when the weather turned cold again a million pipelines froze and burst.

It was not easy to find volunteers for such expeditions, even when under the protection of Geiger counters. The gamma ray effects were cumulative, and made repeated exposure as deadly as a single concentrated dose.

All through the spring and summer, efforts to decontaminate portions of the city were continued. A good deal of radioactivity was washed from the streets with sea water, but once the first layer had been removed, repeated treatment had little effect on the residue. It was particularly difficult to decontaminate the outside of buildings, for hosing them down collected deadly washings at their base. There were no chemicals that could be used to neutralize the poison of radioactivity, as would have been possible had the attack been made by poison gas. Machinery worth countless millions was a total loss. Even when it could be removed, its contamination stayed with it. Packs of carrion-fed dogs, once household pets, roamed the deserted streets until they also died from the effects of radiation.

Although he had managed to get out of the city quickly—by walking through the Holland Tunnel just before they closed it—Roger Jones developed, on the fifth day, mild diarrhea followed by persistent attacks of nausea. Within a week, his temperature went up to 104° and his mouth and throat became severely inflamed. In spite of the devoted and skillful care given him in a Philadelphia hospital, he died on the ninth day.

Dr. Hiram Strandberg, the first man to see the disaster recorded on his telltale instruments, was at once put in charge of the Geiger counter survey squads, and worked night and day until ordered out of the city by Dr. Felix Novak. Two weeks after the explosion his hair began to drop out. After 18 days he began to lose weight and run a fever. After four weeks he was deathly pale, suffered from nosebleeds, and had lost 25 pounds. Only many transfusions and administration of hormones and vitamins saved his life—plus the lucky fact that he had spent the deadliest half-hour of the radioactive mist in the subway on his way to police headquarters. The Wall Street night watchman in the hospital bed next to his developed exactly the same symptoms, but died on the 32nd day.

The body of Dixie Turner was one of the 141 corpses eventually taken from the 77th Street subway station. She would almost certainly have died anyhow.

Not for a whole year was New York City officially declared fit for repopulation by its survivors.

The points to remember about this hypothetical attack are as follows:

First—No detail in the account you have just read is dependent on the future progress of atomic science. The bomb as it is *today*, the bomb as dropped on Japan and tested at Bikini, can do the damage I have described to the people and the city of New York.

Second—Most of the military men who have worked with the bomb doubt whether any effective defense can be developed against a bomb used in this imaginary, but quite practical way.

Third—Until international control becomes a reality, our only safeguard is ceaseless vigilance, and the protection of our leadership in atomic research and development.

Fourth, and most important—We must do everything in our power, to effect *international control of atomic energy*. The men who have worked with the bomb feel that the United States plan, as presented to the United Nations by Bernard M. Baruch, is the best answer to the problem.

The Launching Of Guided Missiles

By Dr. R. E. Gibson and Dr. A. Kossiakoff

Introduction

From the artilleryman's point of view, the guided missile is a weapon for use at ranges where conventional gunfire is impossible or ineffective. Even if the ranges of ordinary guns were increased many fold, the necessity for the guided missile would be reduced only slightly, particularly for the engagement of moving targets, because the long times of flight involved would strain beyond their limit the capacities of present or future fire control systems. Up to a few years ago the whole future history of a shell in time and space was determined irrevocably at the instant it left the muzzle of the gun, no correction based on subsequent more accurate knowledge of the relative positions of the shell and the target being possible thereafter. The development of the proximity fuze introduced the possibility of such a correction by permitting the shell itself to determine from a closer study of the target, the proper time to explode. This was an important advance, particularly in antiaircraft warfare, but it soon became apparent that at long ranges even proximity fuzes were not able to assist the gunner materially, because of the limitations imposed upon him by his inability to use later information to change the course of the shell to allow for the movements of the target. The basic idea underlying the guided missile is the development of a mechanism whereby information about the relative positions and courses of the missile and the target may be secured during the time of flight and utilized to affect the closest possible coincidence of the two at the time the warhead functions.

In this article we are concerned with problems arising in the launching of these missiles and in the paragraphs that follow we shall discuss some of the general underlying principles involved. We shall review the present status of the art and present some quantitative considerations intended to give a foundation for a balanced viewpoint from which the reader may judge future operations in this field.

General Description of Guided Missiles.

Let us first consider the type of missile that will fulfill the general purposes we have just outlined. It can be seen at once that it must possess the following characteristics:

1. It must carry a warhead and fuze of suitable size.
2. It must have a body to house the mechanism for receiving, interpreting, and using intelligence about its position and motion relative to the target.
3. It must be equipped with control surfaces or some other means enabling it to make use of the intelligence to alter its course in space as dictated by the data.
4. It must be able to travel at high speeds in order to out-

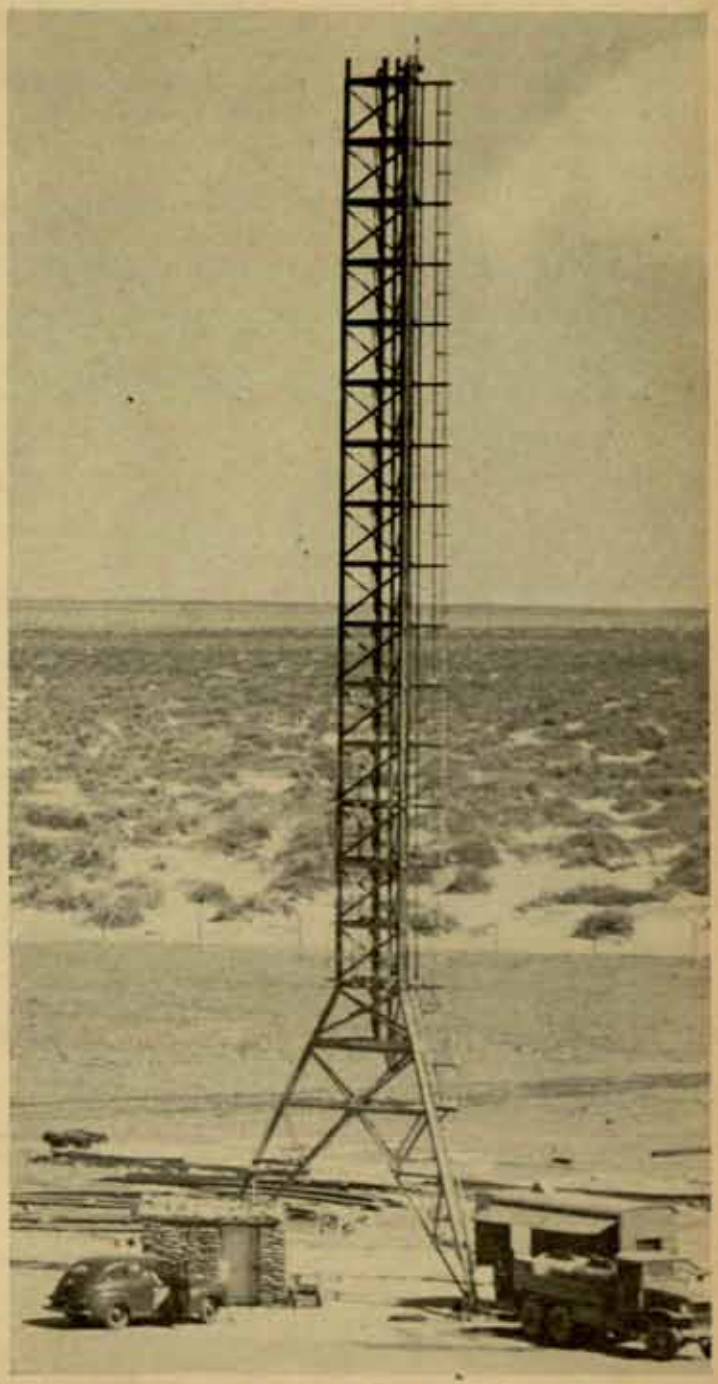

Figure 1—Launcher for WAC Corporal.

maneuver a high speed target or to attain the desired range.

5. For many applications, it must be able to maintain high speeds for a considerable length of time, and hence requires a propulsion system of its own in order to overcome gravity and the aerodynamic drag set up by flight and maneuverability.

Present designs indicate that 1000 lbs is likely to be the minimum weight of an effective guided missile and that five to ten feet is the smallest total span of the wings or control surfaces that will suffice to provide the necessary lift characteristics. Furthermore, in order that the warhead may be of suitable size and effectiveness, the weight of the rest of the missile must be kept as low as possible. This means that the missile cannot be designed to withstand acceleration forces that are even of the same order of magnitude as those set up in a shell during its travel in a gun barrel. It will be seen, therefore, that a missile designed to fulfill the above requirements will be bulky, heavy and fragile compared with ordinary ammunition.

Launching Requirements.

Up to the present, practical experience in the launching of guided missiles has been almost entirely limited to the launching of long-range rockets like the German V-2 and the dropping of guided bombs from airplanes; operations which require only the most rudimentary launching appurtenances.

The launching requirements for the military guided missile of the immediate future will, however, be much more exacting. In some cases the guidance systems used may require more or less elaborate fixed installations for projecting the missile accurately in a given direction; for example, a launcher with train and elevator mechanisms might be required. Furthermore for most applications, missiles will be equipped with propulsion systems designed to sustain th in flight but not to accelerate them to cruising speed. such cases auxiliary power plants will be required to lau the missile. As was shown in the previous paragraph, th relatively fragile construction of the missiles places a sev upper limit for the acceleration it can stand during laun ing, a fact which restricts the choice of an auxiliary pro pulsion system. The need for elaborate equipment f handling and servicing the missiles, and keeping them in readiness prior to launching will have already occurred the reader.

Figure 2—Launcher for "Bumblebee."

Definition of Terminology Used to Describe Launching Mechanisms.

The apparatus for launching a missile should provi whatever control and acceleration are needed during th initial part of the flight to enable the missile's guidance an propulsion systems to carry it to the target in the most e ficient manner. Control during launching is affected by means of a mechanical structure which constrains the mis sile to move in the desired direction of fire. Such a structu is commonly called the *launcher* and will be described detail in the following section. Acceleration, when needed to supplement that provided by the missile's main powe plant, is accomplished by means of an auxiliary source thrust which detaches itself from the missile after the de sired velocity has been attained. If the thrust is supplied a fixed structure, the structure is called a *catapult*. If th thrust is supplied by a unit which travels with the missi during the acceleration period, the unit is referred to as *booster*. Both types of accelerating devices have been u ized and will be discussed below.

Launchers

In considering the practical problems of launching th bulky, heavy and delicate structure comprising the guid missile, we see that the launcher must be a stable, rig structure on which the missile may be set up and servic prior to launching, on which it may reside in comparat security until needed, and which will guide it in the desir direction during at least the first few feet of its journey. is essential that this structure be strong enough to supp the weight of the missile, and that it be rigid and comp enough to withstand the rearward blast expelled by th propulsion system of the missile or of auxiliary launchi rockets. The guiding members must be designed to pr vent the missile from rolling off or receiving damage b cause of movements of the platform, and at the same tim must allow unobstructed passage for the fins, wings, a other external attachments at the time of the missile's d parture.

Generally speaking, a launcher consists of a set of hea steel rails along which the missile slides. These rails are t together by members in such a way as to give maximu rigidity and complete freedom of passage of the vehic The guided length depends very strongly on the size a purpose of the missile itself, and may vary from essenti zero to many times the length of the missile. In practi launchers vary in size and complexity from the bazoo launcher used by infantrymen during the war, to the m

tiple rocket launchers used on landing craft or by field artillery, and to the 90-foot vertical steel tower at White Sands Proving Ground used for launching high altitude rockets. This launcher is shown in Figure 1. An experimental structure used for launching test missiles at smaller angles of elevation is shown in Figure 2.

Present launchers for guided missiles may be classified into two types: *fixed launchers* which send the missile off in a given direction, not necessarily pointed at the target, and *trainable launchers* which dispatch the missile in the direction of the target. The type best suited to a particular military use depends both on the nature of the guidance system and the range at which the target must be intercepted. The fixed launcher, which is usually made vertical, is by far the simplest but is limited to use against relatively long-range targets and requires a separate ground guidance system for each missile. The trainable launcher is best suited for short ranges and makes the least demand on the guidance system of the missile, but it introduces engineering problems which are comparable with those encountered in the construction and use of the largest guns.

Catapults

A catapult combines the function of directing and accelerating the missile during its take-off from the launching platform. Thus the catapult must possess the characteristics of a launcher, described in the preceding section, and in addition must include a system for applying a thrust to the missile during its travel on the launcher. It then serves the same function for a missile as a gun tube does for a shell.

While the catapult behaves in principle like a gun, a guided missile is so different in construction from an artillery shell that there is usually little physical resemblance between a catapult and a conventional gun. As a result of its bulk, the construction of a gun barrel to enclose the missile completely and a piston to transmit the thrust present formidable design problems. In all catapults used at present, this problem has been avoided by having the missile connected externally to the accelerating mechanism. Two examples of such catapults are those used on ships to launch fighter planes, and the launching ramp for the German V-1 (Buzz Bomb). The airplane catapult uses the force exerted by a piston in a hydraulic cylinder to move a system of levers attached to the plane. The levers convert the large force of the piston acting over a short distance into a smaller force acting on the plane over the distance required for take-off. The German V-1 ramp consists of a split tube 165 feet long along which a piston is driven by pressure developed by decomposing hydrogen peroxide. The piston carries a hook which passes through the slot in the tube and engages the underside of the Buzz Bomb. An ingenious device, consisting of a flexible tube which is brought against the slot by the piston, seals the tube behind it. The V-1 catapult accelerates the missile, weighing about 5000 lbs, to a velocity of 240 miles per hour.

We have noted earlier that the relatively fragile missile structure places a definite upper limit on the acceleration to which it can be subjected during launching. A reasonable value, according to present design practices, would be 50 times gravity (50g). It is readily seen that this limitation

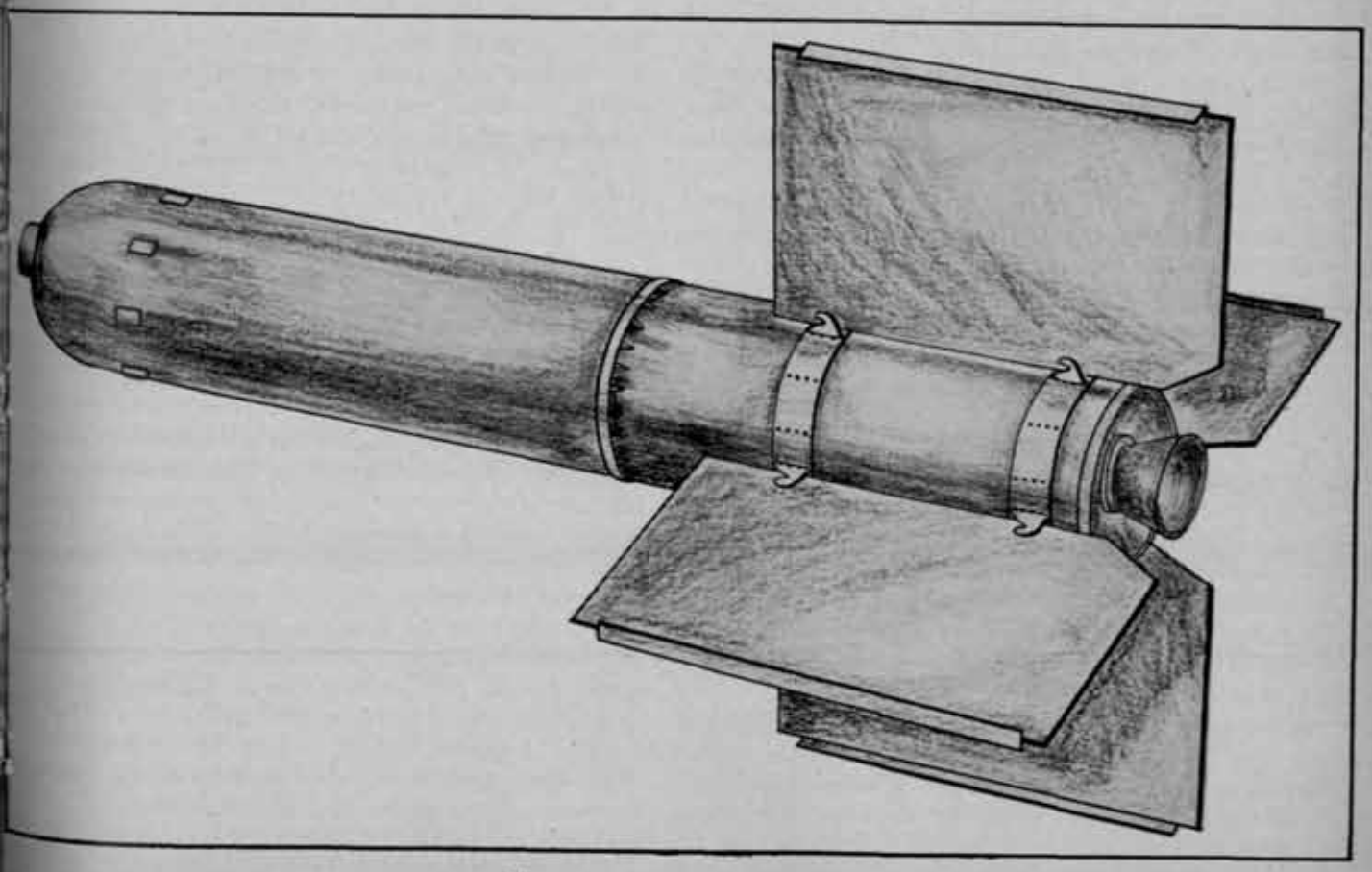

Figure 3—A Booster Rocket.

on acceleration results in a limitation on the velocity which can be attained by a catapult of practical length. As an example, let us consider a catapult 50 feet long which gives the missile a constant acceleration of 50 g. The velocity produced, v, is given by the elementary equation $v^2 = 2as$, where a is the acceleration and s the distance through which it is applied. Substituting $s = 50$ ft. and $a = 50 \times 32$ ft/sec^2, gives $v = 400$ ft/sec. Doubling both the acceleration and the length would give a velocity of 800 ft/sec.

The above analysis shows that the catapult must be large and heavy, elaborately constructed, and that its length strictly limits the velocity to which it can accelerate the missile. It possesses the advantage, however, of being capable of repeated use with little expenditure of fuel and material, as compared to that necessary to supply the same velocity by means of a jettisonable booster unit. Accordingly, it represents a method of launching which, under certain conditions, can be more advantageous than any other means. In addition, even when a high launching velocity is required, the use of a combination of catapult and booster may in certain applications be more expedient than the use of a correspondingly larger booster alone.

Boosters

The booster has been defined as an auxiliary propulsion system which travels with the missile and separates after its impulse has been delivered. In considering the functions of boosters we may recognize four important cases where the entire work of propelling the missile from rest to the target cannot be efficiently accomplished by the main power plant of the missile and can best be done in part by a separate booster. These are listed below:

1. In case the missile must attain full velocity in the shortest possible time and sustain it for a long time thereafter a much larger thrust is needed initially than that which would be developed by a propulsion system designed to maintain the speed. Here a booster which develops a high thrust for a short time and then separates from the missile, fulfills this requirement most effectively. This case is particularly significant when guided missiles are used in defense against attacking aircraft.

2. In case the missile must have minimum weight throughout sustained flight to permit maneuvering or to attain long range with minimum thrust, the use of a booster reduces the weight of the missiles by that of the fuel and tanks required to accelerate it to full velocity.

3. In case the propulsion system used in the missile is effective only above a certain critical velocity, a booster must be used to bring the missile up to the required speed. Ramjets, which are perhaps the most efficient long-range high-speed engines, do not develop appreciable thrust below the velocity of sound in air while pulse- or reso-jets are inefficient at velocities below 100 miles per hour.

4. In case the missile must attain a peak velocity greater than that attainable by a single stage propulsion system the velocity must be achieved in two or more stages by using one or more boosters to provide the velocity in increments.

Actually, most of the missiles now under consideration are subject to one or more of the conditions listed above. For these, the use of a booster during launching is an essential operational requirement.

Requirements for the Auxiliary Propulsion System.

Because of the high velocities to which it is usually necessary to launch guided missiles and the limited time during which the acceleration must usually be accomplished, the horsepower requirements imposed on the auxiliary power plants are quite extraordinary. Consider, for example, the requirements on a booster for accelerating a missile weighing 1000 lbs to a velocity of 2000 feet per second in 2 seconds. The lightest possible auxiliary power plant would weigh at least 1000 lbs. Thus, a mass of 2000 lbs would have to be given an acceleration of approximately 30 g (960 ft per sec^2), which would require a thrust of 60,000 lbs (weight). Remembering that the horsepower input is given by the product of the velocity and the thrust divided by 550 (with the units used), we see further that when the velocity is 1000 feet per second about 110,000 horsepower is required and when the velocity is 2000 feet per second about 220,000 horsepower is required. This performance is unattainable in any but rocket or turbojet engines. Generally speaking therefore, we cannot consider conventional engines, for example an airplane engine and propeller, as providing all the auxiliary power for boosting guided missiles. On the other hand, the application of conventional engines to supply part of the acceleration needed to bring a missile to cruising velocity appears to be feasible. For example, the use of large airplanes to launch heavy missiles at high altitudes with a velocity of approximately 500 feet per second is not only possible but may be profitable.

At present, rockets seem to be the most promising candidate for light and efficient power plants capable of giving the required acceleration to guided missiles. The simplicity, versatility, and the fact that their operation is independent of velocity and altitude gives them an advantage at present over turbojet engines, their only likely competitors for such applications.

Rockets

It will be recalled that rockets carry with them the fuel and oxidizer needed for propulsion, that they develop full thrust even at zero velocity and indeed that their thrust is independent of velocity. With suitable choices of nozzle area and other design variables, rockets can be constructed to give a wide variation of thrusts and operating times.

There is now a considerable background of experience in the use of rockets for launching experimental missiles. Simple methods of coupling the booster to the missile have been devised. It is possible to use a single rocket or a cluster of rockets mounted at the rear end of the missile in such a way that the thrust is applied directly along the axis of the missile, and so that the booster separates easily when it ceases to burn by virtue of its larger aerodynamic drag. It has also been found practical to use as a booster a number of rockets arranged around the circumference of a circle whose center lies in the axis of the missile, the rockets themselves being on the outside of the missile.

Liquid and Solid Fuel Rockets

Rockets fall into two general types—liquid fuel rockets

typified by the German V-2 weapon and solid fuel rockets as typified by the aircraft and artillery rockets used during the war. Both have their own peculiar advantages and disadvantages. In liquid fuel rockets, the fuel and oxidizer are carried in separate tanks whence they are pumped to a relatively small combustion chamber where the propelling reaction takes place. The relatively elaborate equipment needed to control and supply the fuels and oxidizer makes liquid fuel rockets inefficient in small sizes and in cases where a large thrust is required for a short time. For large units, operating for many seconds, the inherent possibilities of liquid rockets as auxiliary power plants are less limited than those of solid rockets.

Compared with current liquid fuel rockets, solid fuel rockets are very simple in design and operation, and this simplicity is one of their important advantages. The rocket motor consists of a cylindrical chamber fitted with a nozzle which restricts the escape of the gases produced by combustion, thus raising their pressure and escape velocity, and then permits them to expand, thus helping to drive the rocket. The rate of gas production is controlled by the chemical composition of the propellant (in particular by the ratio of oxidizing agent to fuel), by the operating pressure and temperature and by the geometry of the charge.

During the past year the art of solid fuel rockets has made notable progress in the direction of the design and building of units many times larger than those previously available. Figure 3 shows a booster rocket used for launching a missile weighing 1000 lbs to a velocity of 1800 ft/sec. It carries approximately 800 lbs of solid propellant, burns for two seconds and has a thrust of approximately 65,000 lbs (weight). Smaller versions of this same design have been used as units in a multiple rocket system for accelerating a similar missile.

Developmental Problems Connected with Booster Rockets.

The more important problems connected with the development and use of booster rockets for launching guided missiles may be stated as follows:

(A) Development of high-thrust, high-total-impulse rockets using either liquid or solid fuels. A flexible design capable of wide extension in scale is desired.

(B) Development of fuels giving high effective gas velocities in rockets.

(C) Development of rocket motors of as low weight as is compatible with safety and reliability of operation.

(D) Development of the means for achieving stability and control of the complete assembly (missile and auxiliary power plant) during the acceleration period.

Under problem (A) the main work now required is a study of the mechanical and interior ballistic design of rockets to obtain the engineering data for the building of units required for any missile without the necessity of a thoroughgoing development for each specific case.

The effective gas velocity is equal to the thrust in poundals obtained when propellant gas is discharged from the nozzle of the rocket at a rate of one pound per second. It depends mainly on the thermodynamic properties of the propellant gases and to a small extent on the *chamber* pressure and the design of the nozzle. The problem of accelerating a missile to high velocities with a rocket booster, depends on being able to use a propellant with a sufficiently high gas velocity. Propellants currently available have effective gas velocities lying between 5000 and 7000 feet per second.

An important parameter in the design of a booster rocket is the ratio of the mass of the empty rocket to the mass of powder carried—this is a measure of the dead load carried by the rocket itself. In the present state of the art it is possible to construct solid fuel rockets in which the weight of the empty rocket is equal to the weight of the powder carried. A number of ways in which the metal to propellant weight may be cut down are being explored. Increase in density of loading, reduction of operating pressures, and thermal insulation of the rocket chamber are among the more promising.

The aerodynamic stability of the missile during launching differs in kind as well as in degree from its stability at full operating speed after the booster has separated. During this period the control surfaces on the missile are not effective either in maintaining a straight course or in executing a maneuver for two reasons: (1) the lift produced by the control surfaces is highly dependent on velocity and is inadequate during most of the accelerating period, and (2) the added weight of the booster rocket, which is usually greater than that of the missile, greatly reduces the response of the missile to the forces developed by the controls. For this reason auxiliary means must be used to guide the course of the missile during the launching period. In order to avoid the use of a separate guidance system, no effort is usually made to fly any but a straight course until separation has occurred.

The stabilization of the booster and missile during launching is accomplished by equipping the former with large fixed fins so as to bring the center of pressure of the entire assembly well behind the center of gravity. With this condition, rotation of the missile axis from the line of flight (yaw or pitch) will be opposed by an aerodynamic restoring moment, and as a result the missile will tend to fly with zero angle of attack.

Since the location of the center of pressure is somewhat dependent on velocity, the fins must be designed to produce a suitable stability over the entire range. However, it has been found experimentally for the type of design usually employed that, if the assembly is stable at low air speeds, it will usually likewise be stable in the transonic and supersonic regions.

In the missile itself, as in conventional aircraft, the degree of stability is usually adjusted to bring the center of pressure a few per cent behind the center of gravity. A greater degree of stability is unnecessary because the guidance system can correct for deflections in course produced by gusts or minor malalignments. Furthermore, additional stability would be undesirable since it would decrease maneuverability.

In contrast to the stability requirements of a controlled missile, those of an uncontrolled rocket, such as the missile-booster combination during launching, are much more severe. This arises from the fact that it is impossible to design the assembly so as to guarantee exact alignment between the axis of thrust of the rocket jet and the center of gravity of

the entire assembly. Thus, the torque produced by a malaligned jet causes the missile to turn and no control is available to correct this condition during the boost. In order to minimize the yawing tendency, which would result in the imposition of excessive loading on the missile wings as well as an unpredictable deviation from a linear path, the fins on the booster are made considerably larger than would be required just to achieve stability. In this way the center of pressure is usually brought about 10 per cent behind the center of gravity. The restoring moment is thus made sufficiently large to prevent the yaw resulting from the unavoidable jet malalignment from exceeding a tolerable limit.

Conclusion

The art of the guided missile is still in an early stage of technical development, and we must again emphasize that practical experience in the launching and flying of these missiles has been limited almost entirely to experimental test vehicles. In this article, therefore, we have confined our attention to those technical aspects of the subject on which a body of information has been accumulated from rocket and catapult experimentation or from the preliminary studies and tests of prototype missiles. During the war, exterior ballistics of fin stabilized rockets were studied extensively, both in theory and practice, and the results of these investigations may be applied directly to guide the efforts of the designer of booster-missile combinations into productive channels. The interior ballistics of rockets and rocket propellants also advanced notably during the war and these investigations, together with later work based upon them, have placed at our disposal a number of devices for accelerating guided missiles and a background for approaching intelligently the many problems pertinent to design and use.

Many problems in the actual launching of guided missiles under field conditions will doubtless have occurred to the reader during his perusal of this article. Problems such as the handling of rockets in the field, the concealment of operations, and the safe disposal of the booster after separation from the missile raise questions whose practical importance cannot be minimized. These problems have not yet been crystallized except in the few specific applications in which experienced military men have had the opportunity to work with the missiles under service conditions. We have, therefore, not attempted any general discussion of this aspect of the subject, but would emphasize that, in our opinion, the formulation and solution of problems arising from experience in their use under tactical conditions is the next important phase in the development of launching systems for military guided missiles.

Moon Rocket*

By Constantin Paul Lent

A question is often asked: What will be the chances for a rocket ship to reach the Moon without being hit by meteorites? Another question: How a rocket will land upon the surface of the Moon?

To answer question No. 1, one must take in consideration that in comparison with the size of the earth and the size of the rocket, the meteors falling on the earth have a better chance to hit the planet because of its tremendous size, while the rocket offers such a small hitting surface. The chances that a rocket will be hit by meteorites is likely to be 100,000 to one or even less.

Question No. 2 is much harder to answer.

An important factor to be considered is the necessity of landing the rocket ship in an upright position. The speed of the rocket at landing can be reduced by firing the rocket motors in reverse and the rocket can be made to land upon a pick. The landing pick must be quite large and massive in construction so that when the rocket hits the surface of the Moon, at reduced speed, it will inbed itself in the ground and hold the rocket in an upright position.

Once the landing has been effected, the next problem will be to leave the rocket for the sake of exploration of the Moon's surface. This is not an easy problem to solve considering the changes of temperature and other unknown factors upon the Moon. It has been estimated that facing the sun the temperature might be as high as plus 230 degrees Centigrade, and in the shade as much as minus 270 degrees Absolute. Inasmuch as there is no atmosphere upon the Moon to help absorb excessive ultraviolet radiation, the rays will be very dangerous to anyone venturing on the Moon without protective equipment such as space suits or shields.

*This extract from Mr. Lent's original article which appeared in his magazine, *Rocket-Jet Flying*, is reproduced here because it brings out a point not covered by G. Edward Pendray's article, "Next Stop the Moon," published in the January-February JOURNAL.

A Strong America Is A Peaceful America

Celebration of Army Week during wartime had a special significance, for during wartime the whole of America was acutely conscious of the Army's importance and indispensability, proud of its accomplishments and secure behind its might.

But this peacetime observance, our second since winning the war, is even more significant than its wartime celebration. Having won the war, we must win the peace, and the theme of Army Week 1947—"A Strong America is a Peaceful America"—is a most powerful reminder of how we may best win the peace.

It would be well if we could be reminded more often than once a year that a strong America is a peaceful America, for it seems that, as always after a war, the warnings in the world news in our daily papers are little heeded.

America was militarily weak in 1917, and Germany thought she could defeat us. America was militarily weak in 1941, and Japan thought we could be defeated. Fortunately, in both wars, we had some allies capable of withstanding the enemy until we could make ready. In any future war, we would not have that advantage, for it is probable that we would be attacked first of all.

America must, therefore, remain strong, to insure the peace we have won so arduously. To remain strong, she need not maintain an unduly large Army. A comparatively small Regular Army, backed by a National Guard and by an Organized Reserve Corps, is all that is needed, all that has been needed.

But all of these components of our Army must be given the means and support necessary to achieve the degree of strength which is essential, and to maintain that strength. To abandon our Army again, in this age, would be more than shortsighted: it would be foolhardy.

Jacob L. Devers
General, USA
Commanding, Army Ground Forces

Training of Radar Operators

By Lieutenant Colonel Leonard M. Orman, Coast Artillery Corps

The amount of reliable data that can be obtained from any radar is dependent to a great extent on the proficiency of the operator. It is admittedly difficult to operate a radar with a high degree of effectiveness under all conditions. Therefore, the operators must combine high native intelligence, good visual acuity, manual dexterity and great concentration with an intense interest in the work if radar is to be used to maximum benefit. To become proficient, the operator must practice continually.

The more the operator is able to understand about his radar equipment and about the tactical situation in which it is used, the more useful will be his performance. Many peculiar results have been obtained with radar that have been humorously attributed to phantoms, pixies, gremlins, and the like for want of a reasonable explanation. If the operator understands fully the limitations of his radar he will often be able to recognize the false character of many types of phantom contacts.

Long experience in observing a radar indicator enables the operator to notice many minute variations in the echo that are not apparent to a less skilled man. By noting these small variations, the operator is often able to estimate the size and type of the target. In one case, a very alert operator was often able to tell not only the approximate number of planes in a group, but the type of plane, by observation of only the radar indicator. Such a performance is extraordinary, but it illustrates the excellent results that can be obtained by close observation coupled with wide experience. An unskilled operator can see only range and azimuth, and that perhaps erratically; a skilled man sees in each pip much information beyond the normal range and azimuth measurements.

In general, a skilled operator can detect a target at a greater range than an unskilled operator. This ability results from very close observation of the scope and a "feeling" for the appearance of echoes that are lost in the "grass" to

The British Waafs shown here illustrate the fact that Great Britain trained and used thousands from the Women's Auxiliary Forces to be operators of radar equipment. In many instances women make better operators than men since they seem to bear up better on work which tends to be monotonous.

the untrained eye.

All operators should be schooled in:

1. Theory of radar.
2. Capabilities and limitations of radar to include the effect of weather on the particular set or sets with which they are to work.
3. IFF.
4. Operational techniques.
5. Pipology.
6. Countermeasures, and defense against countermeasures.

No attempt should be made to have operators understand all of the electrical circuits that exist within a radar. This is the function of the repairman and repairs to a set are his responsibility. Operators should be taught to keep hands off if the set needs repairs.

The balance of this article will be confined to operational techniques since pipology and defense against countermeasures are considered broad enough to deserve separate treatment and the other subjects have been covered previously in this series.

When the general instruction has been concluded, the operator should be introduced to the set which he is to operate. Correct step-by-step procedure in turning on and off, calibrating, tuning and operating each set should be demonstrated. The various uses of the set should be explained. Ways to recognize improper operation and inferior performance should be described, along with suggestions for correcting these faults. Finally, results to be expected from his set should be given so that the efficiency of similar radars may be compared, and steps taken to correct performance when it is not up to standard.

SIGNAL TO NOISE RATIO	TYPICAL PATTERN	ECHO STRENGH
1 to 1 or less		Intermittent echo barely perceptible
2 to 1		Weak echo
4 to 1		Good echo
8 to 1		Strong
16 to 1 or greater		Very strong or Saturating echo

The above sketch shows the variation in pattern in relation to the ratio between the signal and "noise."

Operational Techniques

Various radars differ in physical appearance. Each has its special knobs, types of presentation, and gadgets, depending on the primary function of the individual set. Regardless of this physical variance, there is much that can be said, in a general sense about good operational techniques for all radar sets.

In order to gain the maximum tactical advantage from radar at all times, the radar operational techniques must change as the situation changes. Methods of operation must be flexible. Common sense and a thorough knowledge of the other elements of the battery with which the radar is working must determine which of these techniques should be used in any given situation.

A brief outline of the various basic controls and indicators will form a foundation for a more detailed discussion of these techniques.

1. Range scale. What scale should be used under what conditions?

2. Gain control. This corresponds to the volume control of a broadcast receiver. Should it be set high, low, or medium?

3. Antenna rotation. Should the antenna be rotated continuously? How fast should it turn? Should it always search an area of 360°? If stopped, for how long.

4. Range. How should ranges be read? Should the range step and associated dials be used when provided? Should estimated ranges be used with the assistance of improvised scales?

5. If the radar set is equipped with two or more types of cathode-ray indicators, which should be used, and under what conditions is one preferable to the other?

6. Azimuths and Elevations. Is it possible to match pips and still be off target?

The answers to these questions, for different types of radar sets operating in various tactical situations, will provide the operator with the foundation of operational techniques. From this foundation, each special circumstance will require variations which can only be determined by radar operating experience and common sense.

Each type of radar has been designed for one specific field of application and there is nothing that the operator can do to modify these purposes. An air-search radar is a poor surface-search radar, and vice versa. Each of these types may serve in an emergency as a fire-control radar but they cannot be expected to furnish ranges and azimuths with the same degree of accuracy as a fire-control radar specifically designed for that purpose. In case of failure of either the air- or surface-search radars, the fire-control radar may act as a search set.

Surface-Search Radar

Long-range search for large targets.

It is essential that large surface targets be detected at the maximum possible range of the radar so that an effective defense can be employed. The range scale used should be

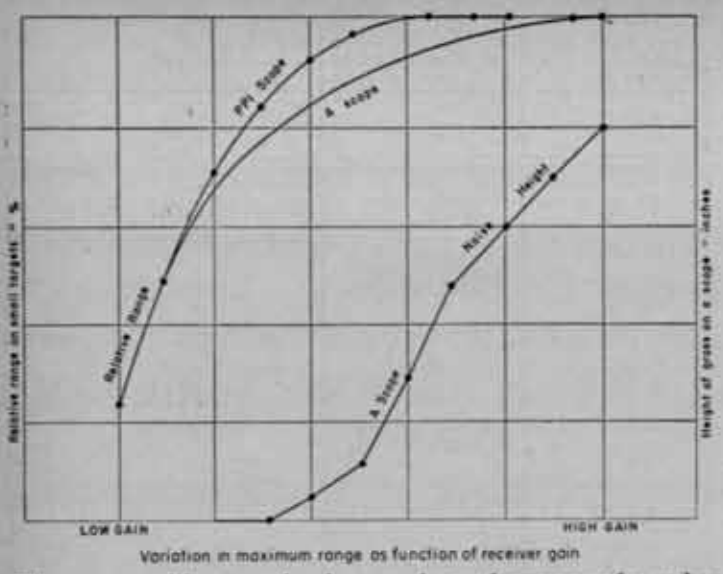

These curves illustrate the decrease in performance of a radar on a small target as the gain is reduced. Compare the curves showing the range on the A scope and the PPI with the curve that shows the grass height on the A scope. When the gain is reduced sufficiently to make the grass only one-eighth inch high, the radar is approximately 95% effective. If further reduction in gain is made, the performance falls off very sharply.

longer than the expected maximum range on ships. The gain control should be set for maximum readability of an echo at 30,000 to 60,000 yards. This setting must be previously established for each particular radar set. The antenna should be rotated at the slowest available speed; an occasional sweep should be made using the manual control, if one is provided. Radars which have both A and PPI scopes will usually show the initial contact on the A scope before it appears on the PPI. If a contact is established, stop the antenna only long enough to obtain an initial azimuth and the A scope range. Attempt to classify the contact specifically by utilizing previous knowledge of the capabilities of your particular radar. Data concerning previously observed maximum ranges on different types of ships, size of pip, and composition of pips will be useful in making this decision.

Assume for this discussion that you are not interested in firing on the new contact. However, you might desire to keep a rough track thereof. Your procedure, then, would be to continue a long-range search, reading azimuths and ranges of the contact "on-the-fly," without stopping the antenna. With practice, sufficiently accurate data may thus be obtained to maintain a reasonably exact track. The important consideration of the on-the-fly operating technique is that you are continuing to search for other contacts without sacrificing the search efficiency of the radar by stopping its antenna on a contact that may not be of primary interest.

Ranges read on-the-fly may be more nearly accurate and easier to obtain if the A range scope is equipped with a scotch-tape scale, and if the PPI is marked with thinly inked range circles. Azimuths can be estimated directly from the PPI.

Short-range search for small targets.

This might be called the submarine or PT-boat search. The range scale used for small-target search should usually be the shortest available scale, although on some sets it may be found that the mid-range scale can be used to better advantage. The receiver gain should be varied during the entire search, its setting depending on the amount of sea return present and other tactical considerations. Look for periscopes close, increase the gain a little, and search near the outer limits of the sea-return area for surfaced submarines and small patrol craft. Remember that sea return is basically the same as an echo from a target, and that it must be present if a small target echo is to be detected.

Operating experience will determine the correct gain setting for different amounts of sea return. Antenna rotation should be as slow as possible; again, make occasional manual searches. New targets should appear on either the A scope or the PPI almost simultaneously, provided the gain is set high enough for PPI operation. These indicators should be alternately observed for equal periods of time to reduce eye strain and monotony. If a contact is made, follow the procedures listed for long-range search. If the target is to be fired upon, coach the fire-control radar on to the contact and resume the search immediately.

Auxiliary fire control.

If your battery has no fire-control radar, or if such equipment has failed, you may have to depend completely on surface-search radar for the control of gunfire.

The radar operator must furnish more accurate ranges and azimuths than those provided by obtaining them on the fly. The antenna must be stopped to obtain accurate ranges from the A scope and azimuths from the azimuth scale. If no A scope is available, the most accurate method of obtaining this data must be selected, depending upon the particular radars in use.

For radar spotting, the antenna must be fixed on the target while the shells are in flight so that splashes may be noted on the radar indicator. In spite of the high degree

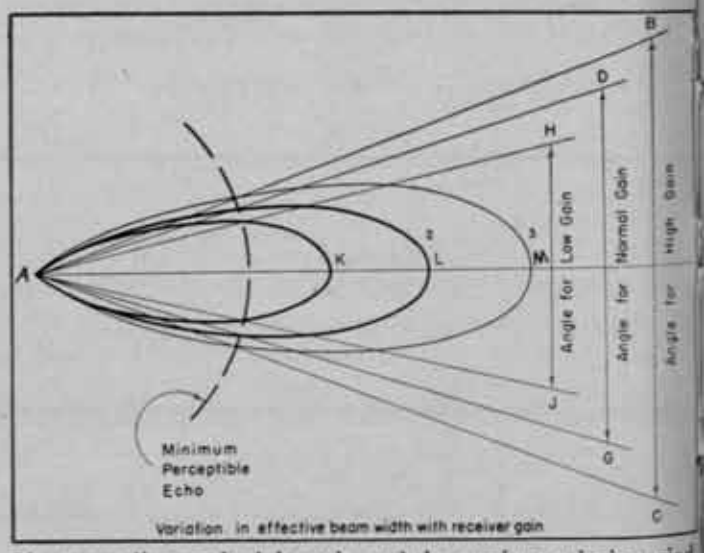

If a target lies on the lobe axis, and the receiver gain is varied, the size of the received echo will also vary. For high gain, the echo will be proportional to the line AM, for medium gain to AL, and for low gain the echo will be proportional to AK. Thus, at high gain, the radar can see the target if it is within the angle BAC since all echoes received in lobe 3 within this angle are larger than the minimum that can be detected. When the gain is reduced to normal, angle DAG applies and for low gain, angle HAJ is the limit.

of accuracy necessary to the satisfactory solution of fire-control, the safest procedure is to make one or two complete antenna rotations every minute or so to make sure that bigger game is not approaching from a different direction.

Composition.

Continuous practice is needed by all radar personnel before they become proficient in analyzing the pip on a radar screen. Every opportunity in analyzing should be utilized when friendly ships are near in order to make notes on the composition of an echo.

Familiar double-peaked echoes are often noted from large ships, such as battleships and carriers at medium or close ranges. Fluctuations of the pip are different when the reflecting object is a rolling destroyer or a more stable cargo vessel. These are among the tricks of the trade that must be mastered by an operator before he can be considered an accomplished operator.

Air-Search Radar

The continually changing tactics of the enemy relating to air attacks makes it difficult to outline the best operating techniques for this type of radar.

For long-range, early warning, air-search radar, the problem involved is that we want to make initial radar contact with the enemy attack groups at the maximum radar range.

The range scale should be set to provide the longest available range in accordance with the observed maximum ranges of the particular radar. The PPI and the A scopes should be watched alternately with the antenna rotating *slowly*. Receiver gain should be set for maximum readability of the indicator under observation. This means that the gain control will be at a different position for A and PPI operation.

Under radar contact, the antenna should be stopped and the echo scrutinized to determine the composition of the pip. The target should be challenged and the A scope should show the IFF response if the target is friendly.

The slow antenna rotation should be resumed immediately, and the all-around search continued to detect other possible targets. The procedure to follow at this time will vary, depending on factors too numerous to present here.

Azimuths should be obtained from the PPI and ranges should be estimated directly from the PPI.

When a plane attack is imminent and when raids are approaching from different directions, short-range search will be in order. Here, continuous antenna rotation is a necessity. The range scale should be set at its medium position, and the gain adjusted for maximum readability of the PPI. Ranges and azimuths are obtained in the same manner as discussed for long-range search. The speed of antenna rotation should be increased as the attack closes and the operator must be prepared to shift to the short-range scale as soon as the targets have reached the outer range limits of this scale.

Tracking targets over land masses is not as difficult as it may seem at first, although it is an art which requires considerable practice. Whenever planes fly over land masses, their contacts can not always be seen on the PPI. When this is the case, use the A scope and the shortest range scale on which the plane can be seen. With the antenna in manual rotation, train slowly through the land mass, watching for a bouncing pip among the steady ones. This will indicate the presence of a plane over land, and the operator may then read its range almost as accurately as if the land were not there. To find its azimuth, adjust the antenna carefully for maximum activity of the bouncing pip. When practicing this technique on friendly planes, IFF affords an excellent method of checking from time to time to be sure that you are on the plane.

When attacking groups of planes have closed within 20 miles, it is essential that close cooperation be maintained between the air-search radar and the fire-control radars. The guns must often be talked on directly from the air-search radar, or by electrical target designation systems connected to that radar. The antenna should be rotated as fast as possible, and the range scales used should be the shortest available on the radar. While this measurably decreases the air-search efficiency, primary consideration must be given to fire-control when planes have closed to attacking ranges.

Side lobes are especially troublesome in this type of operation and the operator must be quick to distinguish the extraneous echoes involved. It will help to reduce the gain as far as practicable, in order to minimize these echoes. They may often be distinguished by comparing their width

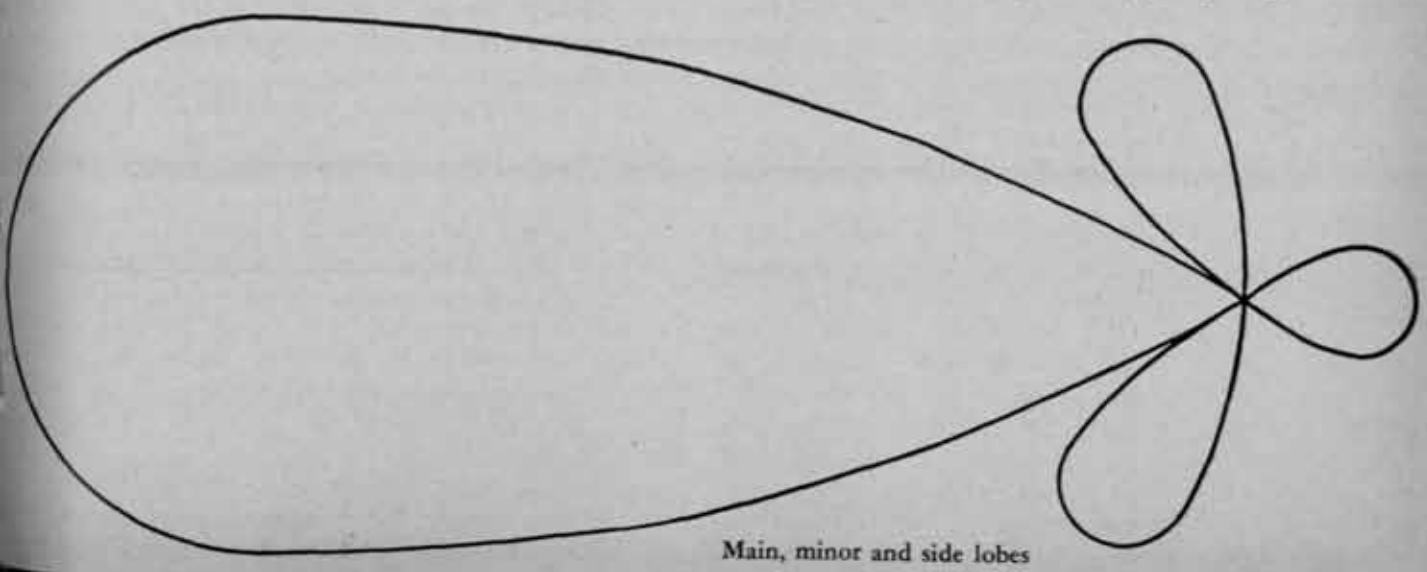

Main, minor and side lobes

(in degrees) with the echo received due to main echo radiation.

Composition.

The A scope is of the greatest value when the composition of a contact is to be obtained. Constant drill by operating crews in estimating the composition of friendly planes is of inestimable value as a means of obtaining reliable data to be used on enemy raids. Composition of raids should be checked at regular intervals, about every 20 miles of target travel, to make sure that any splitting of attack groups may be noted.

Men assigned to search radars should be rotated every thirty minutes. Periods of continuous observance of PPI scopes longer than this are injurious to the eyes.

Fire-Control Radars Employing Pip Matching Scopes. (K-Indicator)

A handy rule to remember when operating a pip matching type of scope is to train toward the smaller of the two pips. The pointer elevates if the left pip is lower. A rule to follow is the THREE L RULE. For the trainer: left, low, left; meaning if the *left* pip is *low*, train to the *left*. For the pointer: left, low, lift; meaning if the *left* pip is *low*, *lift* or elevate the antenna.

Some pointers think of the left pip on their scope as an indication of the position angle of the antenna. If the left pip is low in relation to the right pip, the antenna is pointed below the target. If the left pip is high, the antenna is pointed above the target.

When you train or point toward the lower pip, and it gets lower rather than higher, it indicates that you have a minor lobe contact. The target actually is 15° or 20° to the left or right of this.

Sometimes the trainer will be able to match up two pips, but no pips will show on the elevation scope. This can also be caused by minor lobes, and the trainer should train back and forth until the pointer and the trainer both can see two pips.

In order to realize the full accuracy possible with fire-control radar, the operators must practice making precise measurements of range, and elevation azimuth. Since azimuth and elevation accuracy often depend on matching pip heights, extensive practice in this operation is necessary to develop the operator's judgement to the point where reliable azimuths and elevations can be determined within the rated accuracy of the equipment. Accurate pip matching is difficult and cannot be done well by inexperienced personnel.

The two greatest responsibilities of the range operator are: (1) to keep the pip in the notch, and never let it saturate (flatten on top due to too much receiver sensitivity). The pip must be kept in the center of the notch so that the pip appears even on the pointer's and trainer's scopes. If the pip saturates on the range scope, it will saturate on the trainer's and pointer's scopes, thus preventing them from knowing which way to train or elevate. (2) He must know the position of all controls so well that he can make adjustments to the scope without groping for the knob or taking his eyes from the scope.

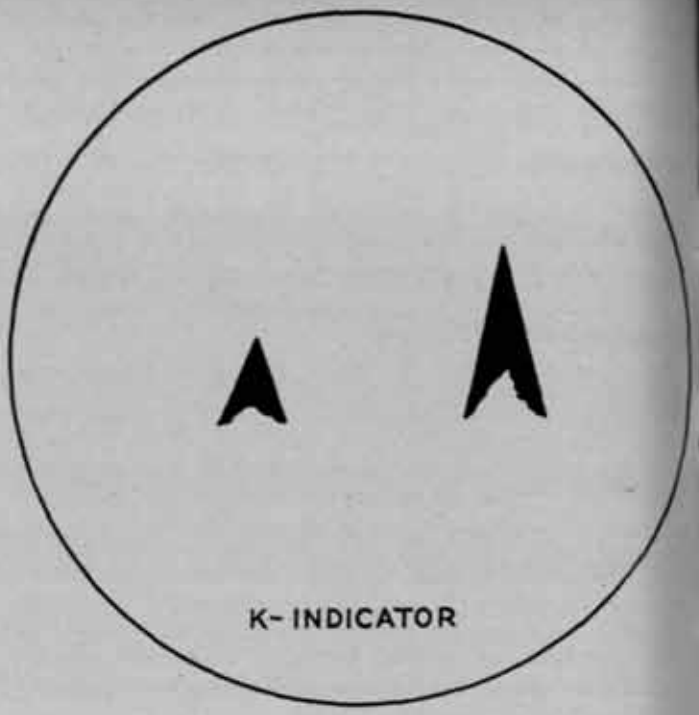

Spotting Shell Splashes

It is possible to follow projectiles in flight and to observe the splash thrown up when they hit the water. You can also see shells from the enemy coming toward you on the screen. Since the splash lasts for only three to five seconds, considerable training is required before the operator can range accurately on the point of impact. Large shells throw more water up in the air than small shells. Therefore, the splashes produced by heavy guns can be detected at a greater range than those from light guns. In general, the maximum range at which splashes can be detected compares well with the maximum effective range of the guns producing the splashes. High-explosive shells give better splashes than armor piercing or sand loaded shells.

Projectiles that fall very close to the target may appear to be a hit because of the limitations in resolution inherent in radar. Therefore, the absence of splash echoes is not an absolute indication of a hit although the shells are followed toward the target on the radar. In general, projectiles that fall short are easier to detect than those that fall beyond the target, because the range resolution of the radar coupled with the extent of the target in range combine to produce a dead space beyond the target.

Rapid fire may produce a sort of enlarged grass in the area of the splashes because of the continuous fall of projectiles. With salvo fire, however, each projectile produces a single fuzzy echo of short duration. Therefore, salvo fire is much easier to spot by radar than rapid fire.

Because the separation in range between targets required for range resolution is usually much less than that required for azimuth resolution, spotting in range by radar is more effective than spotting by deflection. Unless the azimuth resolution of the radar is very good, the operator will not be able to detect shell splashes that are at the correct range but off in deflection.

Antiaircraft bursts produce radar echoes much less effectively than splashes in the water. The echo is returned partly from the metal fragments scattered through the burst

and partly from the hot ionized gases that are the product of the explosion. As the gases expand, they cool; when the gases cool, they lose their ionization. Since the explosion very quickly scatters the metal fragments over a wide area, and because the gases expand very quickly, an antiaircraft burst does not reflect radar pulses for more than a second or two.

Within the short time that the echo is visible it is very difficult to determine the range, azimuth and altitude of an antiaircraft burst relative to the plane at which the shell was fired. A range spot can sometimes be determined satisfactorily; however, the time is so short that it is unlikely that reliable azimuth and altitude spots can be obtained unless the operators are exceptionally alert and well trained.

Manipulation of Controls

For detection of targets at maximum range, the grass must show on the A scope and the "snow" on the PPI. However, the tendency of many operators is to cut receiver gain to a low level in order to obtain an indicator presentation which is sharp, and which shows strong contrast between signals and background noise. This is a dangerous practice. Large signals may continue to show up well on indicators, but the ability of the operator to detect small signals can be greatly reduced. It is necessary that small targets, such as periscopes, and airplanes, be detected at the greatest possible range.

There is no way to eliminate receiver noise entirely. It is always present in sets which are operating properly, but it may not show if the receiver gain is too low. Signals smaller than the noise add to the noise to make the grass higher or the snow brighter. By noting the small change in the appearance of the trace caused by this addition, a good operator is enabled to discern very weak echoes. However, these echoes, which are equal to or less than the noise voltage, cannot be seen if the noise itself does not show.

A properly trained operator will measure ranges always in exactly the same way so that his personal error is small and constant. As a result, the range and azimuth data obtained by a good operator will be more consistent and more reliable than that obtained by an unskilled operator. The skill and dexterity developed by constant practice enable a good operator to measure a range and azimuth quickly. Not only is it desirable that each operator be trained to measure ranges in precisely the same manner on each target, but it is also very desirable that all radar operators be trained in exactly the same operating procedures.

Conclusion

No equipment is better than the man who operates it. Without an operator, a radar set is merely a large box of radio tubes. With a well-trained, alert, interested operator a radar set can become the most important equipment for determining information, in the hands of troops.

Obviously, the techniques presented here will change as equipment and tactics change. In some instances it may be not only practical but advisable to follow another course of action. Resourcefulness based on knowledge and sound judgment should always be the goal and will invariably pay dividends.

Non-Divisional Ground Units to Lose Distinctive Insignia

In a move toward standardization of shoulder sleeve insignia of units other than those of the Divisions, Corps, or Armies, the varied shoulder sleeve insignia which were worn by the small, non-divisional units during wartime soon will disappear. In their place will be seen a predominance of the familiar circular insignia, horizontally divided into equal segments of blue, white, and red, worn by the Army Ground Forces.

General Jacob L. Devers, Commanding General, Ground Forces, has announced several changes in the shoulder sleeve insignia pertaining to units under his command and the War Department has made similar changes in insignia worn by units of the National Guard, and Organized Reserve.

The changes are the result of an effort to decrease individual arm or service consciousness and foster an increased Ground Forces "esprit de corps." To this end, distinctive insignia worn by non-divisional units such as armored, amphibian, airborne, and *antiaircraft artillery*, and the distinctive arc tabs above the shoulder sleeve insignia heretofore worn by members of airborne and mountain units, have been discontinued. Instead these non-divisional units will wear the insignia of the Corps or Army to which assigned. If not assigned to a Corps or Army, these units will wear the insignia of the Army Ground Forces.

Personnel except trainees of each Replacement Training Center are to wear the shoulder sleeve insignia of the Army under whose control the Center is operating.

Personnel at Ground service schools including students under the assignment jurisdiction of the Army Ground Forces, with the exception of those on temporary duty, will wear the present Army Ground Forces insignia.

National Guard and Organized Reserve Corps divisions will continue to wear their respective shoulder sleeve insignia, but the non-divisional ground units of these components will wear the shoulder sleeve insignia of the Army Ground Forces. National Guard personnel will wear a strip with the name of the state or territory below the normal shoulder sleeve insignia when their units are not in the active Federal military service. This will be removed when in active Federal Service. National Guard State headquarters and detachments will wear only the State strip.

BABY TAKES ITS FIRST STEP

By Major Ralph M. Rogers, Cavalry

The date was 24 February 1947; the time was 1415 hours. Watchers at White Sands Ordnance Proving Ground, in the shadow of the Organ Mountains in New Mexico, were gazing intently to the east where a slim steel launching tower rose above the desert sands. Suddenly the tower, at a distance of about seven miles from the camp, was enveloped in a cloud of smoke, dust, and flame. A missile trailing a bright orange flame left the tower and streaked up, up, and ever up until it was lost in space to even the sharpest eyed observer.

All this took place in a matter of seconds. An All-American missile, the "WAC Corporal," had been successfully fired by a crew from the Army Ground Forces 1st AAA Guided Missile Battalion. This was a real "Red-letter" day for the battalion. Baby had taken its first toddling step.

For the battalion was an infant. Activated in October, 1945 it had assisted Ordnance personnel in firing about 20 German A-4 (V-2) rockets, but the firing of the "WAC Corporal" was particularly a coming-of-age event in that the functions of servicing and launching were carried out exclusively by battalion personnel.

"WAC Corporal" ready to go into launcher.

The "WAC Corporal" is a liquid-fuel, experimental, high-altitude sounding rocket developed by the California Institute of Technology, under the cognizance of the Ordnance Department. Though many times smaller than the V-2, the "WAC Corporal" has already proved itself capable of carrying out its mission of taking radiosonde equipment aloft to measure atmospheric conditions in the region above 100,000 feet.

Much of the data obtained by the use of this missile may prove helpful in civilian endeavors. Greater knowledge of upper atmosphere weather could result in benefits to weather sensitive enterprises such as farming, air transportation and shipping.

Ability to fire this missile did not come easily to the 1st AAA Guided Missile Battalion, nor did it come without an expenditure of much time and energy. Through the wholly fine cooperation of officials at the California Institute of Technology, and especially of Dr. Louis G. Dunn of the Jet Propulsion Laboratory, military crews were sent to the laboratories and test pits, and there, under the expert tutelage of civilian engineers, gained knowledge and experience in all of the various functions connected with servicing and launching the missile. Finally, after many weeks of work, the crews, together with the small group of advisory technicians, returned to White Sands Proving Ground for the shoot of 24 February.

The organization of the 1st AAA Guided Missile Battalion is unique in that it is branch immaterial with respect to battery grade officers and enlisted men. All the ground arms and several of the services are represented. Field grade officers are assigned on the basis of educational background and branch representation: Artillery, Infantry, and Armored Force.

Lieutenant Colonel George F. Pindar, CAC, Commanding Officer of the battalion, is responsible for a variety of tasks. Within the framework of the Proving Ground and supervised by Ordnance personnel, soldier mechanics and electricians assist civilian engineers in missile assembly. Soldier machinists and sheet metal workers make minor repairs and fabricate small parts. A soldier ground crew handles transporting, erecting, fueling, orienting, and testing. And an instrument group assist personnel of the Ballistics Research Laboratory of Aberdeen Proving Ground in manning radars, plotting boards, timing equipment, doppler transmitters, theodolites, and electrical precision cameras.

For these jobs, intelligent and hard working personnel are required. Career men are desired because of the classified nature of some of the work. The skills required of battalion personnel range in complexity from radar repairman to jeep driver.

The 1st AAA Guided Missile Battalion is assigned to

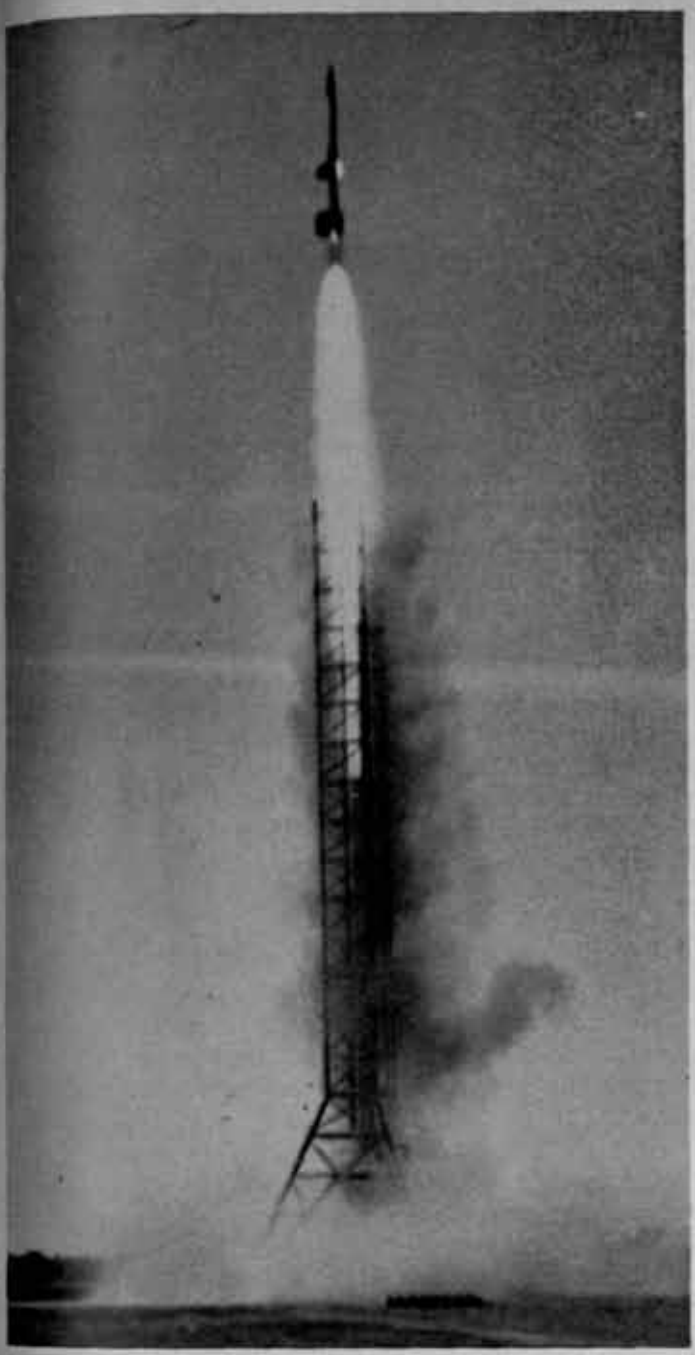

This picture shows the "WAC Corporal" just after leaving the launcher.

Army Ground Forces and attached to The AA & Guided Missile Branch, The Artillery School, Fort Bliss, Texas. With the exception of a detachment at Inyokern, California, and another at Camp Davis, North Carolina, working with the Navy in test firing ground-launched missiles in which Army Ground Forces has an interest, the battalion is living in newly constructed quarters of the semi-permanent type at the White Sands Ordnance Proving Ground.

White Sands Proving Ground, a Class II Ordnance installation directly under the Chief of Ordnance, is a proving ground for the test firing of missiles during their development. It is located forty miles north of Fort Bliss in New Mexico and thirty-five miles southwest of the White Sands National Monument. The isolation of the area and the rather limited facilities for recreation make living conditions something less than ideal, but the importance of the work being done tends to offset these conditions. By conference between the Commanding Officer of the Proving Ground, Lieutenant Colonel Harold R. Turner, and the battalion CO, specific projects for the profitable employment of the battalion are submitted for approval to the Assistant Commandant of The Artillery School, Major General J. L. Homer who is in charge of the AA and Guided Missile Branch.

Although the development of guided missiles is a responsibility of the Army Air Forces and the Ordnance Department, Army Ground Forces retains a prominent interest in the program as a probable using arm. In order to preserve the continuity of this program, when a particular development has run to its completion, it is necessary to have troops capable of service testing and tactical launching without allowing an inordinate delay for training.

It is heartening to all concerned that the 1st AAA Guided Missile Battalion has progressed to the point of being able to launch a missile unaided but it has become increasingly evident during the last year that the prime obstacle to the adequate training of guided missile units in the Army is the absence of available missiles in sufficient numbers to serve as training instruments.

Notwithstanding this fact the battalion has kept abreast of new missile developments by participating in test firing to the fullest extent compatible with the wishes of the Ordnance Department and civilian development agencies. Though this "learn as you go" method admittedly is not the most efficient approach to guided missile training, the best use is being made of the means at hand. With the firing of the "WAC Corporal" on 24 February 1947, a step, if only a short step, forward has been taken in the progress toward producing capable crews to handle the contingencies that the future will bring.

The men who fired the "WAC Corporal" feel, that given the tools and opportunity, they can become adept at handling this new infant prodigy—an instrument capable of unforeseen destruction, but equally capable of serving humanity in a constructive capacity.

Order Your Books Through the Journal

15% Discount on Orders of $2.00 or More

Who's Who In The Atomic Race

By Stefan T. Possony

The invention of the atomic bomb has modified the economic geography of military power. No country can hope to maintain itself in a conflict fought with atomic weapons unless it possesses the elements necessary to manufacture these new implements of war in sufficient quantity and superior quality. Three major elements are required for the production of atomic arms: radioactive raw materials, a large output of electric power, and a big, efficient and technologically progressive industry.

Atomic Raw Materials

Atomic bombs are produced today from uranium and thorium. Although uranium is present in most granitic rocks and appears in more than 120 minerals, it can be mined only at very few places. Thorium is three times more plentiful, but it is mined at even fewer points than uranium. Important deposits of both elements may still be discovered. Yet during the search for radium, most large uranium deposits seem to have been located—at least outside Asia. Both elements are extremely rare. (They are, in fact, so rare that they can hardly ever become a major source of industrial power.)

The energy available in one pound of uranium is equivalent to that gained by the combustion of 1,000 tons of coal. Yet roughly 750,000 tons of uranium would have to be mined every year if coal were to be replaced as the prime source of power in the world. The total amount of recoverable uranium is probably far less than 750,000 tons. To be sure, there is enough uranium available to destroy the world's large cities. Yet if uranium and thorium are extensively used for civilian and defensive purposes, the use of uranium bombs on a mass scale might be precluded by the exhaustion of the raw material.

Uranium Deposits

Before 1922, the carnotite mines in Colorado and Utah were the main producers of uranium (and radium). In that year rich deposits of uranium were discovered in the Belgian Congo near Elisabethville, department of Katanga. In 1930, the world's largest layers of uranium were located near the Great Bear Lake, Canada. A fourth major deposit is on the French island of Madagascar.

Canada has secondary deposits of uranium near the lakes Athabasca and Common and near Port Hope, Ontario. In the United States, uranium is found in smaller quantities in California, Wyoming, Arizona, Nevada, New Mexico, Texas and North Carolina. In the African region, uranium is also available in the Transvaal and in the Uruguru Mountains. Although it is at present not possible to calculate exactly the magnitude of these various deposits, it is probable that between two-thirds and three-fourths of the globe's uranium are concentrated in North America and Africa.

Within the British Empire, uranium is also found in Cornwall as well as in southern and western Australia. The largest European deposit is at Joachimsthal or Jachimov, on the Czech-German border. Norway, Bulgaria, Sweden (Karelia), Finland, Germany (Saxony) and Italy (Piedmont) have small amounts of the valuable element, which is also found at three points in Japan and in the state of Minas Geraes, Brazil.

The uranium resources of the Soviet Union are uncertain. It is assumed that there are no important deposits in European Russia. Some uranium has been discovered in the Urals. Mendelyeevite, an uranium-bearing mineral, is found near Lake Baikal, Siberia. The richest known Soviet deposit is in Turkestan, in the Tyuya Muyun Mountains near Ferghana. None of the Russian deposits seem to be really rich, yet since large parts of the granitic formations in Russia are as yet poorly explored, Russia may actually possess greater reserves of uranium than would appear today. Some European deposits are situated close to the Russian frontier.

Thorium Deposits

Thorium is extracted from monazite sands. The state of Travancore on the Malabar coast in British India, together with Ceylon, supplies almost 80 per cent of the world's needs. The rest comes from Bahia, Brazil, and from the Dutch East Indies. Monazite sands are in Florida and in both Carolinas. Additional British Empire resources are at Villeneuve, Quebec, in New South Wales and in England proper. Thorium is also produced in small quantities in Colombia, Southern Norway and Finland. Russia has by no means inconsiderable resources of monazite, particularly in the gold-bearing regions in the Urals and in the Ilmen range; monazite has also been reported from Siberia.

Electric Power

Extensive use of atomic weapons is impossible without the large-scale production of plutonium. It has not been revealed how much plutonium is used per bomb, although it is known that the amount is by no means small. The production of this element requires a great amount of electrical energy. In the first experiment in atomic fission in 1939, 15 times more electric energy was required than was released. Power is still needed in extremely great quantities. According to the report by Dr. H. D. Smyth of Princeton University the production of one kilogram of plutonium a day would require a plant capable of delivering between 500,000 and 1,500,000 kilowatts. In fact, plutonium output was already in 1945 "very large," according to the Smyth report.

Besides plutonium, atomic bombs can be made of U-235

*Reprinted, courtesy of *Marine Corps Gazette*.

which must be separated from the more common U-238. This separation requires large amounts of electric power by whatever method is chosen. Although a large part of the separation work went on at a site where power produced by TVA could be used, one "of the largest . . . steam power plants . . . ever built" was there constructed.

It may be then assumed that, to make an appreciable number of atomic bombs, one million kilowatts of installed power plant producing 8,000 million kilowatt hours of energy per year must be set aside. As a comparison, the total installed power plant of the entire world in 1924 was estimated at 53 million kw. At present, only three countries —the United States, Germany and Russia—produce more than 30,000 million kwh per year, an output that would seem to be the minimum requirement for a substantial fabrication of atomic bombs. Since Russian power stations utilize more than 60 per cent of their capacity, while Britain exploits only 22 per cent, England should be included into the group of the chief producers of electricity.

While Germany can no longer be counted as a unit, France, Belgium and Holland, including the parts of Germany occupied by France, could together attain a production of 30,000 million kwh per year. Yet only the United States actually turns out enough power to embark upon a large mass production of atomic weapons at the present time.

A nation's total power output indicates its capacity to manufacture atomic bombs. Yet without very large individual power stations production would become even more complicated than it actually is and power requirements would increase on account of losses by long-range transmission. The startling fact is, however, that in the whole world there are not more than 29 power stations with a capacity of more than 500,000 kw. Of these, 25 are in the United States and Canada; two are in Germany and two in Russia. There are only eight power plants with a capacity larger than one million kw; all of them are in the United States and Canada.

Potential Water Power in HP

Africa—274,000,000
- Belgian Congo & Ruanda-Urundi—130,000,000
- French Equatorial Africa—50,000,000

Asia (without Russia)—84,000,000
- India—39,000,000
- China including Manchuria—23,000,000

Soviet Union—78,000,000
- Siberia—64,000,000
- European Russia—14,000,000

North America—77,000,000
- U. S. A.—33,500,000
- Canada—25,500,000

South America—74,000,000
- Brazil—36,000,000

Europe (without Russia)—60,000,000
- Norway—16,000,000
- France—6,000,000
- Spain—5,700,000
- Italy—5,400,000
- Sweden—4,000,000

Russia's third Five Year Plan envisaged the construction of a dozen power stations on the rivers Volga, Kama and Oka. One of these—to be situated on the big bend of the Volga near Kuibyshev—shall become the largest in the world and develop 3.4 million kw. Another large station is planned in the neighborhood of Kaluga. The ultimate output envisaged by Russia is questionable.

Electrification

To what degree can the power plant of the various countries be enlarged? For the production of 8,000 million kwh of energy, about ten million tons of coal per year must be consumed. This seems little in terms of American output. England, too, could set aside such a quantity. Also Germany could mine more coal than she did before her collapse. Coal production in Russia is comparatively small and continuously lags behind plans. The Soviet Union has very large deposits of excellent coal. Although most of it is located in out-of-the-way Siberia, difficulties will be overcome as soon as the transport system has been substantially improved. At present, Russia moreover has access to the coal in Silesia. France is so deficient in coal that even if she retains the Saar region and federates herself economically with Belgium, she would be unable to base the production of atomic weapons on coal.

Large-scale increases in the world's electric plant will probably be based on water power. Although the initial costs of hydroelectric plants are higher than those of steam plants, they offer considerable advantages from the military point of view: once in operation they require neither manpower, nor raw materials or transportation.

What are the hydroelectric reserves of the various countries?

Industrial Potentials

"Just as the automobile replaced the horse and made work for millions of Americans, the atomic explosive will require the services of millions of men if we are compelled to employ them in fighting our battles." (General Marshall.)

The manufacture of atomic bombs requires huge and numerous industrial installations. Moreover, these weapons can be used with impunity only by the side which has secured command in the air, is able to fill the skies with numerous heavy bombers, fighters, long-range rockets and rocket interceptors, and which also protects its own industry and population against atomic reprisal. It seems, therefore, obvious that only the countries with the biggest industrial output will be able to make and employ atomic weapons. Since the industrially strongest nation can produce more atomic bombs and more means of protection than any other country, it should henceforth enjoy a premium of strength greater than that enjoyed by it in previous industrial wars.

Industrial Efficiency

Efficiency and productivity cannot be expressed in quantitative terms. Many people think that, once the secret of the atomic bomb has been pierced, other nations will be able to produce that weapon. The loss of the American *scientific* monopoly of the atomic bomb is ultimately unavoidable, yet not every country will be able to *manufacture* atomic bombs.

Efficiency and productivity of industry become fairly ob-

vious if a nation's production record is examined. An industry which never pioneered, made few contributions to technological progress, boasts of no or very few major inventions and which does not enjoy the services of first-class scientific and creative personnel, is very unlikely to pioneer on an important scale within the foreseeable future, or even to imitate the fabrication of complicated products.

There are no secrets in automobiles, but the overwhelming majority of cars are built in North America. Mass production plants in England, Germany, France and Italy are partly American-owned and equipped with American machinery. While England and Germany specialized in high-quality automobiles, the United States made trucks for almost the entire world.

Russian cars were built with American patents and with American tools. Russia contributed no important improvement to automobile engineering, and had to import great numbers of cars, trucks, and even tractors, the very basis of her mechanized agriculture. (For that matter, Dnieprestroi was built by an American firm and much of the machinery was imported from the United States.) Russia's industry as a whole still depends upon the importation of machinery and tools from leading industrial countries.

The industrial preponderance of Western Europe and North America is gradually broken with respect to commodities of more or less easy and standardized manufacture. Yet it is *more* pronounced than ever with respect to products of complicated design requiring precision work on a large scale.

Only the United States and Great Britain were able to turn out satisfactory heavy bombers. They had an unchallenged monopoly in bombsight and radar equipment. No other country was ever able to build efficient aircraft carriers and to equip them with aircraft as effective as land-based planes. High octane gasoline, although invented by a Russian, was produced largely in the United States, Great Britain and Germany and had to be imported during the war into Russia. Other examples could be quoted *ad limitum*. Germany alone was able throughout history to compete technologically and industrially with England and America.

Even if technological secrets are revealed, the know-how of production will not be transferred to other countries. Numerous Anglo-Saxon "secret weapons" were known to all belligerents, but few were successfully imitated. The production of atomic bombs is unquestionably the most difficult industrial task ever performed. For example, uranium must be purified to a degree far exceeding the purity of materials needed in laboratories. An impurity in granite of one part in 50,000 is considered undesirable. The cooling system requires a sheath "that would protect uranium from water corrosion, would keep fission products out of the water, would transmit heat from the uranium to the water, and would not absorb too many neutrons."

Can similar—almost superhuman—problems be solved by industries which heretofore only occasionally manufactured complicated and revolutionary equipment and which receive the bulk of their precision tools from abroad? The history of industrial production indicates that such an achievement is most unlikely.

Inventiveness

Yet suppose that rapid industrial progress will enable other countries to catch up with the production of the atomic bomb. Will the United States and Great Britain be able to retain their lead in the development of atomic weapons and to produce them in a superior quality?

Will the Great Powers embark upon competition for the control of Africa's uranium deposits and hydroelectric potential? Will they compete for the uranium deposits and the power plant of Central Europe and Scandinavia? These are the major problems of tomorrow's international politics.

Conclusions

In terms of industrial efficiency, only the United States and Great Britain can be considered as capable of making atomic weapons within the near future, even if the secret cannot be maintained. The industries situated between the Ruhr and the Loire are efficient enough to take up atomic production, although they would have to import their raw materials from overseas. Yet in the absence of economic and political federation, atomic production in Western Europe may be ruled out as unlikely. On the basis of the historical record, it would be very surprising if Russian industry could engage in atomic competition.

The only region which possesses all the elements needed for atomic production is the United States and Canada. The continent of North America is thus the geographic center of atomic power. Little is in view to indicate that within the next decades that center will be removed to other areas. The invention of the atomic bomb has, so it seems, enhanced the strength of the already potentially and actually strongest military power—the United States. If moreover the United States and Great Britain pool their intellectual resources, as they did so successfully during the war, an almost permanent and crushing superiority in atomic production will be assured for democracy. This is, perhaps, the most solid reason for the hope that, this time, peace may be of a more durable quality.

A STRONG AMERICA

IS A PEACEFUL AMERICA

Guided Missiles Instruction At Fort Bliss

By Colonel John H. Madison, Coast Artillery Corps

As an exemplification of the progressive attitude of the Army Ground Force Schools, a course devoted exclusively to the study of guided missiles was initiated last September at the Antiaircraft and Guided Missiles Branch of the Artillery School, at Fort Bliss, Texas (then the Antiaircraft Artillery School). The course was established in recognition of the requirement that the student must be informed of the development of new weapons, the technical characteristics of such weapons and their effect upon tactical doctrine.

The mission of the Guided Missile Department (as prescribed by Army Ground Forces) is:

(1) To teach in detail the tactics and techniques of guided missiles and to qualify officers as competent commanders for all guided missile units of Army Ground Forces.

(2) To train selected enlisted men as leaders of guided missile units, as guided missile technicians and as instructors in guided missile units of the Regular Army, the National Guard, the Organized Reserve Corps and the Reserve Officers Training Corps.

(3) To serve as an agency of the Army Ground Forces in the development and perfection of guided missile tactics and technique.

In anticipation of the establishment of a Guided Missile Department in the School, a subcourse covering guided missiles was conducted in the Research and Analysis Department for eight students during the spring of 1946.

Lieutenant Colonel Lawrence W. Byers, CAC, was a member of this student group, and, as a result of his studies in the Research and Analysis Department, was selected for the position of Director of the Guided Missile Department. As such, he became responsible for the preparation of the program of instruction and for the solution of many formidable problems incident to the establishment of instruction in this new field. His success in putting this course on an efficient operational basis, notwithstanding the lack of precedent in conducting a course in guided missiles, dearth of suitable instructional material and lack of trained instructors, is attested by the high level of instruction being offered, and by the enthusiastic response the students have given to the course presented.

Colonel Byers has been assisted by Capt. William D. Sydnor, Jr., CAC, in the preparation and presentation of the program of instruction. Capt. Sydnor was the instructor for the eight students selected for the first subcourse on guided missiles. Due to his excellent technical education in mechanical engineering, and experience gained in this assignment, Capt. Sydnor has contributed materially to the planning and implementation of the instructional program.

Captain George U. Ford, Jr., CAC, formerly a member of the 1st AAA Guided Missile Battalion, was assigned to the Guided Missile Department as a specialist in servicing and launching of the German A-4 (V-2) rocket.

Material on which instruction is based is obtained from standard engineering texts, technical reports of German development and from the technical reports prepared by the various agencies cooperating in the development of guided missiles. This material is being consolidated into manuscripts which will become texts for later courses.

Army Ground Forces Board Number 4 has established a Museum of Guided Missiles at Fort Bliss, containing a number of U. S. developed guided missiles. The museum serves as a source of training aids. In addition, component parts of guiding systems and power plants are being assembled in the laboratories of the Guided Missile Department for demonstration and study. These facilities are augmented by those available to the Department at White Sands Proving Ground.

Lieutenant Colonel Lawrence W. Byers, Director of the Guided Missile Department, AA & GM Branch, The Artillery School.

The Guided Missile course, being presented to thirty students this school year, is designed to familiarize ground force officers with the history of jet-propulsion, the fundamental physical laws on which the design and construction of guided missiles are based and the associated subjects of guidance and control. From these studies, conclusions are drawn as to the most probable development of guided missiles and high velocity weapons in the immediate future. Then, augmenting their own wartime experience with this background, students are encouraged to propose tactical doctrines or theories for the employment of these weapons and to consider defensive measures which offer the best likelihood of success.

In view of the highly technical nature of the subject matter, current enrollment in the officers' course is limited to officers having an engineering degree. Students are selected on a branch immaterial basis. The first three months of the nine-months course are devoted to a review of mathematics and the physical sciences and to a study and review of electronics. This is followed by a period of instruction in guided missiles including such subjects as free flight, aerodynamics, stabilization, guidance and propulsion. German developments to the close of World War II, and developments in this country, and elsewhere, are studied and appraised.

A period of one month is devoted to the study of the technique of servicing and launching guided missiles, under the supervision of the 1st AAA Guided Missile Battalion at the White Sands Proving Ground, New Mexico. While there, the students will witness the servicing, testing and launching of German A-4 (V-2) rockets, and U. S. weapons developed by the Army Ordnance and Civilian Agencies charged with the development of guided missiles.

About two months are allotted in this year's course for study of selected guided missile research and development projects. This will be in the nature of "on the job training," in which the students will learn by participation. Part of the students will go to Johns Hopkins University while the remainder will go to the Ordnance Research and Development Sub-Office at the California Institute of Technology.

The last month of the course will be devoted to the preparation of a thesis upon some phase of the guided missile problem, preferably dealing with tactical employment. Students now in attendance in the Guided Missile Course will upon completion, be qualified for:

(1) Assignment as instructors in Army Ground Force Schools.

(2) Assignment to AGF test boards.

(3) Duty with the AA Guided Missile Battalions.

(4) Assignment as liaison officers on guided missile development projects.

(5) Dissemination of guided missile information in major unit commands.

In addition to the nine-months officers' guided missile course, the Department is now presenting orientation subcourses in guided missiles for students in the Branch Basic Course, the Branch Advanced Course, the Associate Basic Course, the Research and Analysis Course and the Master Gunners Course. These subcourses vary in length from two days to two weeks.

Plans for the coming year contemplate the introduction of a thirteen-week associate officers' guided missile course and enlisted men's courses including Guided Missile Radar, Guided Missile Electrician, Guided Missile Gyroscope Technician and Guided Missile Fuel Technician.

Antiairborne Defense*—By Major General James M. Gavin

The basis of any effective antiairborne defense is knowledge of enemy airborne troops and their equipment and capabilities. Knowledge dispels fear. Without it fear and panic will mount during an airborne attack that can quickly change civilians and soldiers from a defensive asset to a liability. Well illustrated and well written publications describing the enemy airborne troops in detail must be distributed to all troops and civilians in likely operational areas. Everyone, civilians especially, must understand what action is expected of them if the enemy delivers an airborne attack. Airborne troops always need transportation, and usually they need food, water, medical assistance, and directions. They must be denied these things. The presence of hostile airborne troops must promptly be reported to the proper defensive agency.

The defending commander must analyze his sector to determine the likely airborne targets and probable landing areas. On the basis of this evaluation he makes his first passive defensive measures. These may consist of erecting poles and similar obstacles in landing areas, mining landing areas, establishing observation posts, emplacing weapons, camouflaging defensive installations, and burying wire communications. Alternate means of communications must be provided including alternate radio frequencies. Auditory and visual alarms must be provided.

Critical tactical objectives such as airfields, airlanding areas and bridges require special defense preparations. Bridges are prepared for demolitions, for the destruction of a bridge will often be the first step toward isolating the attacking force. Remote switches are provided so that a bridge can be blown from some distance away, even a mile or more in case the bridge is lost intact. Countersigns are provided and everyone practiced in their use. Thoroughness in preparation for a good passive defense may be a substitute for troops in the first critical minute following the hostile landings.

On the combined basis of the enemy's capabilities and probable behavior and the extent of the passive defensive measures, the defending commander then prepares a plan for the active defense of his sector. Troops must be posted at critical objectives such as airfields, airlanding areas bridges, power plants, military fabrication plants, missile launching sites, etc. These troops constitute the reconnaissance and security screen. They give the earliest warning of the location and weight of the attack. They cover the arrival of larger defense forces by attacking, impeding and blocking the invading airborne troops.

*Extracted from "Airborne Armies of the Future," *Infantry Journal*.

Warheads For German Antiaircraft Guided Missiles

By Walter H. Wallace

German guided missile warheads were designed to be employed with two general types of missiles: A, those missiles employed as antiaircraft weapons; and B, those employed for ground-to-ground or air-to-ground purposes.

Upon approaching the problem of designing warheads for use against aircraft it is apparent that the task is far more difficult than that involved in the design of warheads for missiles intended for ground-to-ground or air-to-ground use. First of all it is necessary to determine how much blast or fragmentation is necessary to destroy an enemy airplane. After this is done, it is then necessary to determine whether or not the required blast or fragmentation can be obtained from warheads of various types and shapes.

The first of these problems is naturally attacked from two directions:

A. Tests in which aircraft are exposed to bomb or projectile fragments, and

B. Studies based on flak damage to aircraft.

Harassed as they were by Allied bombers, the Germans gave considerable thought to antiaircraft missiles, and warheads were designed for approximately eight such missiles. With all this interest in antiaircraft weapons, it is therefore quite surprising to find that apparently very little work was done by the Germans in determining the vulnerability of aircraft.

During 1942 some experiments were carried out by the Germans against captured B-17's. Various bare charges of H.E. were exploded statically inside, on, and at various distances from the aircraft skin, and the damage assessed. From these experiments it was possible to arrive at a figure for the weight of charge required to produce certain destruction for various positions of detonation relative to the aircraft. The results were expressed in the form of "lethality" contours.

One or two other tests are known to have been made but a thorough search of existing reports shows that in general the decision to adopt a given type of warhead was reached by the hit-and-miss method. German documents are still under examination and it is possible that more data will become available. At the present time, however, the writer does not know of any extensive tests for blast effect and none at all where the *fragment* effect of warheads or shells bursting at different distances from aircraft was examined.

It is important, therefore, in reading the following brief descriptions of warheads which the Germans contemplated using, to note that the size, shape, and type of explosive proposed is not necessarily the best possible for antiaircraft work and was not based to any extent on vulnerability tests.

The *Enzian* (Gentian, a flower) was conceived as a ground-to-air flak weapon. Its secondary purpose was that of an air-to-air weapon. It has been described as a flying wing design of striking similarity to the Me. 163, and weighed about 3960 lbs. Reports from various sources sometimes describe the warhead as weighing 660 and at other times 1100 lbs. Apparently it was thought possible without constructional alteration of the shell to have the Enzian fly with either weight. The alteration in loading was to be compensated for by transfer of components within the missile. The warhead was to be of steel or plastic wood.

Three general types of 1100-lb warheads were projected for model E-4, the production design, Enzian. The type which seems to have been most favored by the engineers and local flak officers was built up of a metal shell or container 1½mm thick. The shell was lined with cylindrical pellets cast of mild steel 20mm by 30mm long, containing an *incendiary core!* The explosive used in the resulting cavity contained a booster charge and fuze in the forward end on the longitudinal axis.

The second type of warhead incorporated 550 small rockets driven by gunpowder. The rockets were mounted in the warhead to fire forward in a 30° cone from a maximum range of 300 meters. Their effective range, however, was 550 meters but at that range the Germans considered each rocket capable of destroying a bomber.

The third type of warhead was straight explosive, dependent only on concussion to destroy the target.

The Rheintochter I (Rhine Daughter) was a ground-launched, subsonic, radio-controlled antiaircraft rocket designed for use against bomber formations. (Weight about 3850 lbs.)

Since the rear section of this missile was filled with the propellant charge and the forward section with control gear, the warhead had to be located in the midsection of the missile. It consisted of a chamber 1500mm in length and was filled with 330 lbs of high explosive. An acoustic proximity fuze was under development, but so far as known was not incorporated in any of the experimental missiles.

A similar missile, the Rheintochter III, also was to carry the warhead in the midsection. At various times it was proposed to use solid, cast explosive, depending upon the blast effect, while at other times thought was given to using a charge of incendiary pellets weighing 60 grams each.

The X-4 was an air-to-air guided missile to be carried aloft and launched from fast fighter aircraft against unescorted bombers. (An interesting point about this missile was that control would be by means of electrical impulses transmitted through a pair of fine insulated wires from the parent aircraft.) It is believed that this missile was never used operationally. As first conceived, it was expected that a 44-lb cast steel warhead would enclose the explosive.

However, possibly due to the shortage of steel in Germany at the beginning of 1945, consideration was given to the use of an uncased moulded plastic type of warhead which was to be attached to the missile by wood screws. In addition, some reports describe a warhead consisting of a central explosive of cylindrical form surrounded by a quantity of cylindrical bodies (up to 400) containing phosphorus incendiary material. These were to be driven into the wing tanks of the attacked aircraft like shrapnel, by the force of the explosion.

The Hs 298 was designed primarily as an air-to-air weapon to be carried underneath the wing and fuselage of fast bombers or fighters equipped with special launching rails. The missile was never used operationally.

A 106-lb thin case blast effect warhead was planned. The explosive was to be poured in a molten state into the body section, where the propulsion unit was housed, and was to be protected by a small amount of insulation from the heat of the propelling charge. It was expected that both a proximity and point detonation type fuze would be used.

The Hs 117 series (better known as the Schmetterling or Butterfly) was a rocket-propelled, radio-controlled missile for use against bomber formations. Some versions were designed for ground-to-air and some for air-to-air use. It is not believed to have been used operationally. Considerable divergence of opinion existed on the effectiveness of fragmentation or incendiary pellet filling as against blast effect only, but apparently in August, 1944, a blast effect warhead weighing 55 lbs was selected.

The MF-5 was one of a series of U-Boat-to-Air missiles developed under the code name of Nussknacker (Nutcracker). No test models for this round were completed. However available information indicates that the warhead was to weigh approximately 33 lbs.

The Wasserfall was a supersonic, radio-controlled rocket similar to the V-2, and designed to be launched vertically from the ground at airplanes flying at 60,000 feet, 560 miles per hour, and at a distance of 30 miles from the missile's launching point. It was never used operationally. Reports differ as to the type of warhead to be employed. According to some, about 670 lbs of explosive were to be used. About 220 to 330 lbs would be concentrated in the nose. The remainder would be distributed throughout the body much in the form of primacord. According to others, however, the weight of explosive was 550 lbs distributed to obtain maximum fragmentation with minimum excess metal. Consideration was given both to a proximity fuze and detonation to be accomplished by remote control from the ground.

Although not a guided missile in the ordinary sense of the word, the German Natter should be included in this discussion of warheads. It was a small, *piloted* rocket-propelled interceptor, planned for attack on bombers but was not used operationally. The warhead (armament) consisted of a honeycomb type of apparatus holding either 24 or 48 electrically fired rockets. Consideration was also given to installing two 30mm guns or perhaps a battery of barrels from the same gun, each with only one shell. In theory, the missile was to be guided automatically until just before reaching the target, when the pilot would take over and fire one burst. After the attack, the pilot would be thrown clear of the plane by an automatic ejection device, descending to earth by parachute. At the same time the rear end of the plane would also descend by parachute.

The theory followed by some antiairborne defensive commanders in World War II of always attacking every airborne landing at once with all means available is not sound. The main force may attack later but initially in most cases the reconnaissance or security force should make every man and weapon count in locating and determining the weight of the attacking force. The attacking force can then be handled as the next higher commander considers appropriate to the accomplishment of his mission.

But the defensive plans themselves are worth little unless they are rehearsed. Realistic rehearsals of the passive and active defensive plans must follow their preparation. These rehearsals constitute the training of the defending forces. They are supplemented by conference and theoretical discussions of every detail of the defensive plans. There should be frequent war games in which hypothetical situations are presented for solution to various individual commanders and staff members in every echelon of the defending force. In this manner all become familiar with the plans as well as the thinking and probable actions of subordinate commanders in carrying out the plans.

All plans must be kept up to date. Rapid strides are being made in the development of airborne equipment and the capabilities of airborne units are improving monthly. Hence to be of any value plans must be revised and rehearsed frequently.—MAJOR GENERAL JAMES M. GAVIN in *The Infantry Journal.*

The Army In The Arctic

By Major Hal D. Steward, Cavalry

Opinions as to the practicability of armor under conditions found in the Arctic regions of the Far North differed among the army officers interviewed on a recent 10,000-mile air tour of Alaska and the Aleutian Islands that took this writer to Task Forces "Frigid" and "Williwaw" and the Alaskan Department Headquarters.

Major Myron Johnson, tank test officer at Task Force Frigid, and Captain George J. Sheets, Commanding Officer of Company B, 66th Tank Battalion, the outfit that is testing all armored equipment for the task force, both say that with improvements and modifications on present American tanks they can be made successful in the extreme cold weather areas.

At task Force Williwaw on Adak Island in the Aleutians, Major J. H. Cronin, chief of armor test section, states that tanks have been found unsatisfactory because they quickly bellydown in the soft Aleutian tundra.

Tanks are not the only pieces of military equipment that are being found in need of modifications for efficient use in the Arctic regions. It has been discovered that equipment, especially vehicles, begin to fail at 40 degrees below zero.

Sixty degrees below zero seems to be, from Task Force Frigid tests and observations, the breaking point for soldiers in standing the severe cold. After a temperature of minus 60 degrees is reached, they lose efficiency with increasing pace. According to Colonel Kane, Frigid commander, a man loses his efficiency at the rate of two per cent for every degree under zero. This means, that at minus 50 degrees and below, a man needs assistance in taking care of himself.

Upon arriving in the extreme cold areas of Alaska, soldiers must go through a mental conditioning to erase the fear of cold. This, according to Colonel Kane, is important.

One tank officer assigned to Frigid spent six hours in a tank at sub-zero temperatures and he said his efficiency at the end of the period was nil. In the Arctic, no person has yet been able to stay in a tank for more than six hours. A person cannot remain in an M-4 Tank (Sherman-medium) for more than about 10 minutes in sub-zero weather without beginning to freeze. On one test when the outside temperature was only seven degrees below zero, the temperature inside the M-4 was comparable to minus 42 degrees because of the wind chill factor.

Task Force Frigid is charged with testing equipment and clothing in the extreme cold, while Task Force Williwaw has the different job of testing equipment and clothing in the wet-cold weather. Ladd Field at Fairbanks, where Task Force Frigid is located, and Adak Island in the Aleutians, home of Task Force Williwaw, are considered to be ideal for these important tests.

Most gun turrets freeze at about minus 35 degrees. Ammunition is difficult to handle inside a tank in the extreme cold. Human flesh will burn if held too long on metal. Clothing is too bulky for tank crewmen, especially for the driver. Tracks and bogey wheels become frozen and immovable after 10 hours of exposure in the extreme cold. These are just a few of the difficulties being encountered by armored men attached to Task Force Frigid.

A tank that will operate in the extreme cold areas, according to Captain Sheets, should have the following requirements: 1. lubricants that will not freeze; 2. greases that will not freeze; 3. a better grade of gas with a lower flash point; 4. a battery that will take a charge at extremely low temperatures; 5. a heater in the tank that can be adjusted to whatever temperature is desired; 6. clothing that is less bulky for the crew members; 7. all seals made of material that will stand the cold down to minus 70 degrees or lower; and 8. the M-26 needs a heavier engine. In addition, tank crewmen must be extremely skilled in the performance of their duties.

Maintenance units are hard to move in the severe cold weather experienced in the Far North. The present authorization of mechanics in a tank company is too inadequate for efficient maintenance. It should be increased at least three times. Organizational spare parts should be increased for more unit assemblies. The unit assemblies should be winterized at the factory where they are manufactured.

It is the opinion of Captain Sheets that each tank operating in extreme cold areas should be equipped with a wanagan on sledges that the vehicle can pull. The wanagan should be about 10 feet long, eight feet high and eight feet wide. Inside the wanagan would be folding cots, a heater, a table, and stowage cabinets. This would provide shelter for the crew. During an actual engagement, the wanagan would be disconnected. After the combat action ended, one tank could pull all the wanagans of the unit to the next selected position.

Most tankmen assigned to Frigid desire a ration on the order of the C or E ration that would have a pleasing flavor. They also believe that it is absolutely necessary to have an organic unit with each company to thaw out and prepare the food. It now takes 40 minutes to thaw out the meat component of C or E rations. Insulated containers to protect the food from the cold should be provided. When exposed to the Arctic cold, food freezes solid before a soldier can eat it.

Frigid officers estimate that they spend 90 per cent of their time fighting the elements.

Ice fog created by gun blasts makes it impossible for the gunner to observe his fire from a tank turret. At the present time a tank crewman must observe the tank's fire from about 20 yards to the flank.

Electrically heated suits for the tank crew, such as the Air Forces now has, may be the answer to combat cold as far as armored personnel are concerned.

There is much disagreement among Frigid officers as to whether armored vehicles could operate effectively over the terrain found in Arctic regions. Many maintain that the lack of road networks and deep snow would limit the mobility of armor to a great extent. Others take the stand that the ground is hard and flat enough to operate without networks of roads. But, all agree that the tanks must first be modified so that they can operate mechanically before tests on mobility and maneuverability are conducted in the Arctic.

No satisfactory method of evacuating casualties in the extreme cold areas has yet been discovered. If a wounded man was allowed to lie in the Arctic cold for more than a few minutes he would in all probability freeze to death. Some means of evacuating casualties instantly must be discovered.

While in Alaska this writer observed on 24 January 1947, the first tactical maneuver of all combined units of Task Force Frigid.

It was clearly emphasized in the tactical problem that time factors in assembling squads, platoons, and higher units are different than any place else in the world. The problem was worked out according to schedule but much slower than it would have been in a temperate zone.

Tanks in the tactical problem traveled at only four miles per hour; ordinarily they travel at about 20 miles per hour under favorable conditions.

Frigid has a policy that men are taken in from the field when their body temperature drops to 96 degrees from exposure to the severe cold. A few had to be sent in during the tactical problem that lasted three hours. The Germans have recorded body temperatures of 80 degrees of men still living. However, recovery when body temperatures are allowed to decline in this manner is very rare.

"The tests of weapons and equipment we are conducting at Task Force Frigid will prove a challenge to American industry," says Major Milton Price, plans and training officer of the task force. He was explaining that much of the standard army equipment is being observed when in use in Arctic weather. "The equipment is beginning to fail us. Much of it cannot be used in the Arctic. But if industry can supply the kind of equipment we need, we can supply the kind of men who can use it. The men here are not failing."

A strong "buddy system" is in force at Frigid whereby men pair off and watch out for each other. They watch one another's faces for signs of freezing. They never venture away from camp alone.

Wardrobe of the average soldier serving with Frigid outdoors is: long woolen underwear (over which you pull on two pairs of trousers); light woolen socks, two pairs of heavy ski socks, a pair of felt socks and pair of mukluks (knee-high canvas boots); a woolen shirt or two, a sweater and finally a heavy pile parka (coat with hood); two pairs of gloves and a heavy fur-lined cap to protect your face and head.

Circumstances (many beyond the control of Task Force Frigid) have prevented the unit from getting the necessary equipment to carry out its program successfully. The recent shipping strike on the West Coast did much to hold up supplies to Frigid. Some of its equipment is still held up somewhere along the line. The task force is scheduled to leave Fairbanks sometime in May, and because much of the equipment hasn't reached it, many cold weather tests may be left uncompleted.

Some Frigid officers are of the opinion that the Quarter-

This unimposing row of tents serves as field headquarters of Task Force Frigid when it is maneuvering on the barren wastes of the Arctic.

Signal Corps Photo

master Corps should have a clothing alteration unit attached to the task force so as to make the necessary adjustments on winter clothing as recommendations are made and proven.

"I can't imagine moving masses of troops across this country by land," is the statement of Major General Howard A. Craig, Alaskan Department commander, who believes that airborne troops only could be successful.

This same opinion is shared by Colonel Kane, Frigid commander.

Only about two per cent of Adak, where temperatures seldom fall below freezing, according to Colonel A. M. Gurney, Commander of U. S. troops on Adak, is usable for military installations. The remainder is a wasteland of mud, marsh, rocks and rugged mountains.

Movement over terrain is the big job confronting Task Force Williwaw on Adak Island. This task force is having little difficulty with the firing of its weapons, but keeping troops warm and dry is a problem it has not yet solved.

It is not possible to move such artillery pieces as the 155-mm rifle ("Long Tom") off the roads because they become bogged down in the mud immediately. This is being solved by dragging the large guns on sledges across the mud and wasteland.

Small arms need more lubrication in the Aleutians than they do in temperate zones. Too much clothing is necessary to keep the men warm and dry. No adequate shelter has been devised for service in the field on Adak. This is also true at Frigid. Tentage and shelter in the opinion of Williwaw officers will probably need to be completely redesigned.

Medical evacuation presents a problem in the Aleutians as it does at Frigid. The present methods used on Adak are unsatisfactory because they require too much personnel and time. A method is being worked out whereby a Weasel can be used as an ambulance.

There is no difficulty in water purification on Adak. Forward aid stations as yet have no satisfactory shelter. Work is being done, however, on an evacuation sleeping bag designed to keep a casualty warm. Electrically heated blankets are also being experimented with.

Colonel Joseph D. Raney, commander of Williwaw, stated in an interview, "Adak is ideal terrain for cavalry operations, especially in the use of pack animals."

The Williwaw commander had requested that a pack animal unit be assigned to the task force but the request was turned down because of lack of time. The task force is slated to leave Adak sometime in March or April.

The Arctic today presents problems to the American Army that it has never experienced in its battle history.

All troops will need a long period of training in cold weather operations (at least three months) before being sent to the Far North for duty. It is the opinion of Frigid and Williwaw officers and men that a soldier could not

Two Task Force Williwaw tanks are shown bogged down in the tundra found on Adak Island in the Aleutians. Such terrain as this has slowed down task force operations.

Signal Corps Photo

Signal Corps Photo

Task Force Frigid has developed specially constructed ice bridges for moving large vehicles over ice and snow. Here a M-26 tank rolls across Tanana Creek near Fairbanks, Alaska, without difficulty.

move directly into a severe cold weather area and be expected to perform efficiently in actual combat without proper training.

Normal body functions in the Arctic are performed at risk. A deep breath during exertion or coughing may result in frostbitten bronchial tubes. Sweat may freeze. Elimination involves complications and discomfort.

The problem of keeping warm in moving vehicles is being faced by Frigid soldiers. There, lack of body movement plus tight quarters in the covered Jeeps and Weasels cause discomfort.

Carbon monoxide gives great trouble to persons riding in closed vehicles in the Far North. This difficulty must be conquered.

Communications men have a tough job in the Arctic. The laying of cable must be done by hand in deep snow and violently cold temperatures. Finding and repairing breaks made by animals, tanks and other accidents is a mean job.

Mechanics, making emergency repairs in the field, must take off their large mittens (and often the wool glove) in order to reach into a tight place and make an adjustment. Cold tools frostbite the hand, and while the hand is numb it receives no warning of burns from hot metal until the damage is done.

Standing around in the Arctic is hard work. The clothing issued at the present time is warm enough to keep a man from freezing while he is moving, but when he stands still for a long period he is subject to torturous pains from the extreme cold.

Because of the dryness in the Arctic, fires are a great hazard. Every precaution must be taken against them. If a unit goes for a whole week without having a fire they consider it a record.

Alaska is lacking in supply lines and communications. This would present the Army with one of its biggest problems, in the event of another emergency. A single track railroad that isn't expected to last more than one or two years longer without extensive, expensive and probably uneconomical expenditure of labor and materials, is today attempting to supply the 80,000 people of Alaska. During this writer's visit to Fairbanks the train had been delayed for two weeks because of snowbanks and landslides.

Military strength of Frigid is some 1,500 officers and men while Williwaw has just under 800.

From the standpoint of military operations because of its distance from the United States and the lack of transportation facilities (other than air and water) Alaska may be considered an island. The Alcan Highway provides the only existing through land communication with the Continental United States. This highway will require considerable improvement and extensive continuing maintenance if used as a supply route.

Colonel Frank A. Bogart, director of logistics for the Alaskan Department, indicated to this writer that the Alcan Highway is primarily of value as a means for emergency supply. Running from Edmonton, Canada, to Fairbanks, Alaska, through hundreds of miles of muskeg which is entirely uninhabited, it is now in daily use, even in the recent sub-zero weather.

"To supply Alaska by truck over the Alcan Highway is not economically feasible," said Colonel Bogart. He stated that The Alaska Railroad ran a convoy of trucks over the Highway during the recent West Coast shipping strike. The shipping costs were so high that the use of the route would be prohibitive from a commercial standpoint.

"Rail connection with the United States through Canada is possible," says Colonel Bogart. "Such a route has already been surveyed." He could give no other information on the proposed rail link with the U.S., but said that in his opinion the railroad would be primarily of strategic value and would have to be built and initially maintained by the government, since at first it would not be commercially profitable.

The land area of Alaska is about one-fifth the size of the Continental United States, but because it is comprised of numerous widely scattered islands it occupies a relatively larger area of the earth's surface. The distance from Juneau to Attu is approximately the same as that from Savannah, Georgia, to Los Angeles, and from Juneau to Point Barrow is about as far as from Fort Worth, Texas, to Duluth, Minnesota.

EDITOR'S NOTE: *It was originally planned to publish an article pertaining to the operation of antiaircraft matériel in both task forces but due to security restrictions it was not possible to print the article as written. It is hoped that we will be permitted to print an amended version of the article in the next issue.*

America Can Be Made Bomb Resistant

By Lieutenant Colonel William R. Kintner, Infantry

If there is a next war, and the use of atom bombs has not been outlawed by an ironclad international agreement, will Americans make the next Strategic Bombing Survey? Or, instead, will foreign scientists stumble over the rubble of Detroit, New York and Chicago to check the results of the weapons they helped to fashion? Americans have not yet squarely faced these unpleasant questions. The idea of atomic war is so dreadful that most of us would rather not think of wars at all. But can we put it off so easily?

Characteristically, people tend to see themselves in others. We Americans dislike war. Because atomic war carries with it implications of mass destruction of human life and our cities, we fall back on the comforting belief that other people, and especially the rulers of other people, are equally reluctant to engage in atomic strife. But are they? May not the American belief correspond more to wishful thinking than to the realities of the modern world? The American hatred of war is the flower of our Christian faith which maintains that the life and inherent rights of each human being are priceless. Yet this belief is shared by only a comparatively small portion of the globe's population. Not more than a third of the world's people pay even lip service to Christianity; the remainder follow creeds of religion or of materialism which give scant regard to individual aspirations.

Anyone who has traveled in or studied Asia knows the low value placed on human life by the Orientals. Centuries of Tartar rule have impressed a similar attitude upon the people living in the vast stretches of Eurasia. Human life is cheap wherever religious fatalism or godless materialism reigns. Rulers in such regions may not hesitate to sacrifice millions of their own subjects to win what they believe to be necessary objectives.

We cannot escape from this reality of the modern world. We live in a world separated by fundamentally distinct ideas. We cannot overlook the possibility of war as long as ideas and attitudes which make war feasible persist. Under these circumstances should Americans live in a fool's paradise? Until our idea of the free individual is everywhere triumphant or respected there will be no genuine peace. Until that happy day comes we must prepare ourselves for war.

Although such a war would not be of our own choosing, the logic of recent history indicates that we will be among the first victims of the struggle. In order to win such a war, and for humanity's sake, we must be able to withstand the first shattering blows even if they are delivered by atomic bombs. What are we doing now to cushion the shock of surprise atomic warfare? Because matchbox Japanese cities were pulverized by the bomb, must our own cities meet a similar fate? Are we hypnotized by the saying that there is no defense against the atomic bomb? Although means may never be found to prevent the atomic bomb from doing tremendous damage, we can prevent the damage from knocking us out. Just as the lightning rod was eventually found to tame destructive bolts from the sky, means can be found to reduce the damage which atomic bombs may inflict. Common sense warns us to find these means and to start on the road to survival.

The many plans that have been presented as possible defensive measures against atomic attack have been found to be impracticable either by consideration of their exorbitant cost or the ruinous effect their execution would have on the American way of life. Suggested defenses would require the complete regimentation of American society, and thus our values of individual freedom would have to be surrendered to totalitarian control before the first bomb was dropped. For this obvious reason schemes to place the nation underground or in caves, or to substitute "ribbon" cities in place of our current towns, must be dismissed.

These plans, however, are not the only alternatives. Less drastic measures will provide an important degree of defense against the bomb if we first learn to appreciate and intelligently use the great gift of space that God has given America. Space can be enlisted as our first line of defense. By reversing the unproductive and potentially disastrous piling up of people, industry and communication facilities we can make our people less vulnerable to death from the sky and at the same time give all of them sun to see, air to breathe and land to live upon. America can be made bomb resistant through gradual alteration of our cities and through careful direction of new industrial and private construction. A bomb resistant America will be able to absorb the first deadly atomic blows and still be able to fight back. Moreover, gradual alteration in the spacial structure of the United States, while fulfilling the essentially negative needs of atomic defense, will also bring many other additional benefits. To understand this double possibility one must look back at the historical formation of our modern cities.

Modern industrial cities are stepchildren of the industrial revolution. No one planned their birth, their growth or their development. When machine fabrication replaced home production, workers gradually moved to the vicinity of the factories which housed the machines. Because the worker had to live alongside his factory, the economy of

mass production led to the growth of densely populated cities. The conditions leading to this growth persisted throughout the nineteenth century. The modern city, created by these and other forces, has its good points and its bad. Its bad points center around the fact that large areas in our cities do not constitute attractive places in which to live. Yet the economic justification for this state of affairs ended when the automobile was popularized sufficiently to provide the majority of Americans with a convenient, cheap means of transportation. The automobile has eliminated the need for overcrowded cities, because it is now both practical and economical for a worker to live five, ten or twenty miles from his place of employment. Because of this fact, the present generation of Americans have already started to reverse the living pattern of the nineteenth century. Proof, that the trend toward community decentralization grows stronger all the time, can be found by noting that the density of population in our cities decreases while their adjoining suburbs grow by leaps and bounds. Nor is this a short term movement. Healthy, attractive, efficient factories are being built miles from nowhere. Such dispersion pays. Management benefits from cheaper land and lower taxes; the worker profits from a chance to live a normal healthy life which our old industrial pattern often denied him. Intelligent direction of this inevitable trend can make America bomb resistant within a generation.

Haphazard dispersion has often left behind depressed areas which form cancers in the structure of our industrial cities. Municipal officials, faced with increased social responsibility and decreased taxes, have been fighting the effect of dispersion rather than attempting to understand its cause. Yet there is a way out. The adoption of a three-way dispersion program for defense will make American cities a better place in which to live and simultaneously improve the defense characteristics of our industrial system. Decentralization coupled with the elimination of depressed urban areas can be accomplished without hamstringing our economy. As a third step, we must require that all new construction be as bomb resistant as human ingenuity can make it, a measure, incidentally, which will aid in the conservation of our dwindling natural resources and decrease the astronomical tribute we yearly pay to fire.

A marked degree of safety against atomic attack can be built into individual buildings once we analyze the atom bomb's performance. The atom bomb destroys in three ways. Its battering ram blast force flattens weakly designed structures. The terrific heat generated by the explosion acts as an incendiary spark to all inflammable buildings and material. Lastly, the bomb releases quantities of radioactive particles which kill or seriously harm human beings. Factories, office buildings and private homes can be redesigned to check each of these forces released by atomic explosion. It is significant that the concrete communications center of Hiroshima, one of the few modern structures in that ill-fated city, survived the bombing relatively intact. True, its insides were gutted, and its doors and windows were blown out of place, but not even the least attempt had been made to prepare this structure to withstand its momentous test. Yet sensible alterations in building design can reduce atomic damage to controllable proportions.

More substantial construction, and design which will make blast waves ricochet off structures rather than smashing them to pieces, can weaken the hammer-effect of the bomb. The bomb's incendiary role can be minimized by using only non-inflammable or fire resistant materials in all future construction. Although protection against atomic radiation is still in the pioneer stage, and presents the greatest problem, are we to believe such protection impossible? It has been suggested that a type of lead base paint might deaden buildings to ray penetration.

There is no reason why all new construction in our critical industrial areas should not embody all feasible safeguards against atomic damage. Some measures can be taken immediately. For example, wood could be eliminated as a building material in critical industrial areas, and this essential resource saved for other important uses. Such prohibition would improve our bomb resistance, while permitting our forests to recuperate from ruinous depletion. Reinforced concrete would likely become the basic building material of factories and, to a lesser extent, of private dwellings. The Western European countries, long short of lumber, have pioneered in the use of concrete for attractive dwellings.

The adoption of a few basic design principles would go a long way toward making new buildings bomb resistant. To begin with, roofs should be made sufficiently sturdy to withstand near hits. Full protection against direct atomic bomb hits will no doubt remain impossible, but by the same token the chances of a direct hit will always be low. Building partitions must also serve as fire stops and blast dampers as well as for their normal purpose. No bomb resistant structure will have more than one or two stories. This fact suggests the possibility of covering the roofs with thick dirt topping, which, when planted, would make the factory blend harmoniously with the surrounding countryside and thus decrease the chances of a direct hit. Earth roof covering would also provide a high degree of heat and ray insulation against the bomb. Window panes should be made of shatterproof, heat resistant glass, while the windows should be protected by properly designed baffle walls. New factories will be air-conditioned. Adequate protection of the air intake will enable the entire installation to become an effective, radiation free shelter for personnel.

Additional protection for the individual city dweller is also possible. By making the first floor base of sturdy, reinforced concrete the family cellar could become an effective air raid shelter in more than name. The incendiary danger could be reduced by making home furnishings fireproof or at least fire resistant.

We must do more, however, than make individual structures bomb resistant. Our goal must be a dispersed America capable of withstanding and recovering from the shock of a surprise atomic attack. Dispersion can make the cost of an atomic attack prohibitive in terms of damage accomplished. After an atomic attack, a bomb resistant America must be able to maintain an adequate supply of food and weapons, possess an effective, living population; and enjoy the use of uninterrupted communications. This goal cannot be reached without a few inconveniences. Our pioneer ancestors could put up with the inconveniences of a stockade in order to survive. Is our own survival less important? Our survival will depend on the effort we make and the vision we bring to municipal planning.

Many vital questions arise in considering redesign plans for our cities. What industries will have to be removed or placed in the city's outer area? What key industries or installations will have to go underground? Incidentally, the practical Swedes have already launched a program of underground installations for vital production. Surprisingly enough, the cost of such plants has only been about fifteen per cent higher than above ground construction, a factor which may be further reduced by lower heating and maintenance costs.

Our present cities must be reshaped to meet the defense and social needs of our age. The principles on which defensive design should be based have become evident through analysis of the lessons learned in the air raids on British, German and Japanese cities. The key to city security is space. Space increases the attacker's bomb damage cost, provides fire wave barriers, and prevents the clogging of essential communication. Necessary space can be gained by the elimination of slum areas and other marginal, antiquated construction. Building laws should prohibit any future overcrowding. Industrial plants must be separated from residential districts by wide cleared areas. Land devoted to parks and other recreation grounds should equal the space covered by buildings. Broad main arteries, at least a hundred yards wide, should crisscross the built up area. Such main arteries should never come to a dead end or intersect at circles unless alternate routing is provided. Railroad freight yards and depot facilities should be placed as far from the center of the city as possible. To gain these objectives, city planners might set up population density scales for various types of metropolitan areas along the lines of existing zoning restrictions devised for other purposes.

A dependable water supply will likely always remain the best protection against fire. During the recent war the British built unsightly, makeshift static-water pools all over their important cities. Why not disperse a greatly increased number of attractive community swimming pools around our own cities which will also serve the same fire fighting purpose? American youth would certainly favor such a plan.

Traffic jams and the lack of adequate parking facilities have become a growing handicap to our modern cities. The wide arteries of bomb resistant cities would end traffic jams. Underground parking garages, designed for instant conversion to bomb shelters in time of war, would solve future parking problems. San Francisco has already constructed parking facilities along these lines.

The incidental benefits of creating a bomb resistant city may well repay the cost. Slum areas, breeding places of crime and political corruption, will be abolished, as they should be, regardless of the atom bomb. Unhealthy congestion of people will be eliminated, while increased recreational acreage will add great pleasure to urban existence.

Successful dispersion must be accompanied by an invulnerable transportation system and an assured supply of electrical power. Transportation bottlenecks in peace will sound our death knell in war. Greater use of water transportation for heavy material should be encouraged as rivers or canals are difficult to bomb out. Rather than building new bridges across rivers in critical areas, the capital should be expended for bomb resistant tunnels. A tunnel has been suggested for the proposed additional San Francisco Bay crossing on the grounds that it would be less vulnerable than a bridge in time of war. The problem of assuring an adequate power supply can be solved by making power installations virtually impregnable, and establishing a nationwide, duplicate grid for the distribution of electric current.

The War Department has done some study on the problem of bomb defense, its initiative prompted by concern that no other agency of government had begun to explore the question. But the task does not belong to the War Department alone; indeed, its role in regard to dispersion will be almost altogether advisory. The entire federal machinery, the various states, and municipal governments working in cooperative partnership with private industry must get this defense ball rolling. Some laws will doubtless have to be passed to accelerate dispersion by providing tax adjustments or other types of federal aid where excessive economic hardship results. But the job of making our homeland safe will be accomplished only if the American people want it done, and to adequately meet the atomic challenge, we will have to add the survival motive to the profit motive.

Successful national defense will require more than spacial rearrangements. America must possess an organization capable of minimizing panic when disaster strikes from the air. Because we were spared bombardment, our recent attempt at Civil Defense was amateurish, yet it is axiomatic that a society ready to withstand an air attack has a much better chance of surviving with light losses than one that is caught off guard. Intensive study must be made of the air raid defense measures employed by other nations and especially by the much bombed Germans. Britain's foresight in continuing her civil defense organization intact deserves imitation. We should establish a sound civil defense system adapted to our needs. The National Guard might well accept the coordination and execution of home defense as its most vital mission. For, as General Spaatz remarked about a potential enemy, "If he should have his way the Arsenal of Democracy would become the prime theater of war."

We cannot remain complacent to such a statement. The world-wide battle of ideas continues. It may end in the battle of bombs. We are not ready for such a test now. Can we afford to remain unprepared?

Don't Forget the Discount You Get From The Journal
On Books, Magazines and Engraving

SCHOOL PROGRAM FOR GROUND REGULAR OFFICERS

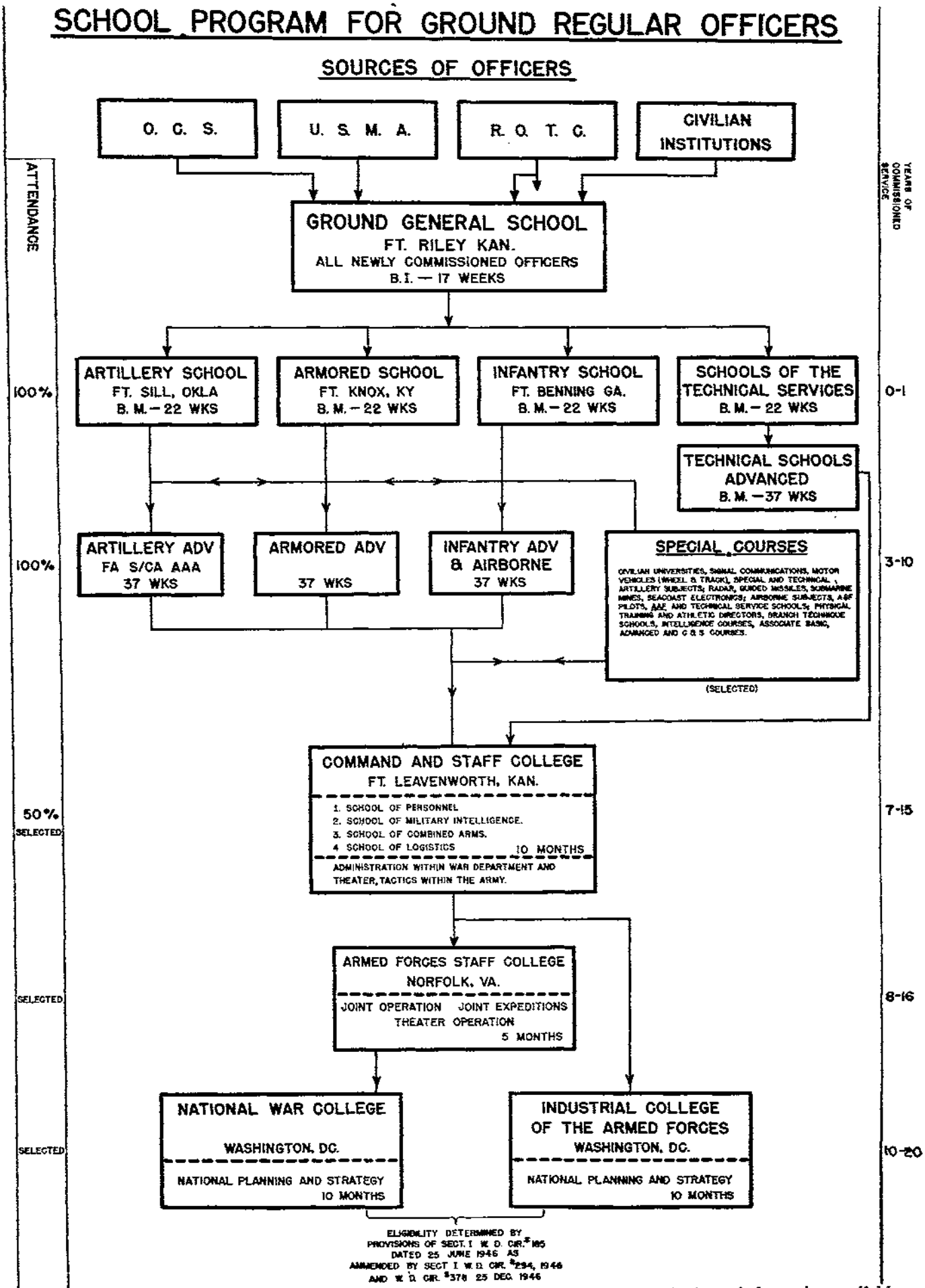

This chart supersedes the one published in the May-June issue of last year and represents the latest information available on the War Department School Program.

ARMY SEEKS BILL TO REVISE PROMOTIONS

The War Department today announced proposed legislation at the present session of Congress which would revise the Army promotion system to place it on an "incentive basis" and insure the advancement of officers of the highest caliber to positions of leadership in the postwar Army.

Principal feature of the bill, as announced by Brigadier General John E. Dahlquist, Chairman of the Promotion Planning Committee in the War Department Personnel and Administration Division, would be the creation of selection boards which would pass on the qualifications of all officers before promotion to grades higher than first lieutenant.

To insure a simple conversion when President Truman's unification plan is enacted into law, the present Army promotion list would be divided into two parts, one for officers of the Air Corps and the other for officers of other components of the present promotion list.

The present system of commissioning an officer in a specific arm or service and promoting him solely on the basis of years service completed would be eliminated. Instead, officers presently commissioned in services other than Air Corps, the Medical services, Chaplains and WAC would be commissioned as "officers, Regular Army of the United States," and would be assigned within the Army as requirements and the officer's capabilities dictate.

Required time in grade before eligibility for promotion has been established would be reduced under the plan. Instead of automatic promotion to captain after 10 years, major after 17 and lieutenant colonel after 23, as under the present promotion law, consideration for promotion of officers who complete respectively 7, 14, and 21 years' service would be mandatory. Filling the vacancies created by expansion of the Regular Army will make possible earlier promotion for some time to come.

Although second lieutenants would advance to first lieutenant automatically after three years' service, no first lieutenant would be promoted to captain after seven years until he had been recommended by a selection board. However, officers considered for promotion must be the senior officers in the grade being considered.

To eliminate officers whose records do not qualify them for promotion, the bill provides for a "pass-over" system by which officers in grades of first lieutenant, captain and major would be retired or released from service after his juniors had been promoted over him on two occasions.

Because the vacancies in the higher grades of full colonel and general officer are limited, a system of "forced attrition" would be applied to guarantee a turnover of approximately 20 per cent annually in those grades. Colonels and brigadier generals with five years' service in grade and 30 or more years' total service would be retired, and major generals with a similar time in grade and 35 years' service would likewise go into retirement.

This forced attrition would create vacancies for lieutenant colonels and colonels to advance.

If the grade distribution in the grades below colonel in the Regular Army become seriously unbalanced, making forced attrition desirable, the Secretary of War, according to the bill, may direct that selection boards consider the qualifications of up to 120 senior officers in a grade in order to fill each 100 vacancies in the next higher grade. The maximum forced attrition possible under this system would be 11 per cent of any group considered for promotion. It is not anticipated that much forced attrition will be required for many years to come.

To compensate officers for their services if they are released before becoming eligible for retirement benefits under the law, a system of severance pay would be established. This would be a cash settlement proportionate to the officer's length of service; two months' active duty pay per year of service, with a limitation of two years' pay as maximum severance benefit.

With the elimination of commissions in arms and services, the bill would wipe out the present distinction between general officers of the line and generals of the staff, drawing chiefs of technical and administrative services from the best qualified general officers or colonels. The plan would not eliminate arms and services, but would give these subdivisions of the Army an opportunity to draw their personnel from the entire Army promotion list.

The bill which is to be known as "The Officer Personnel Act of 1947" also contains provision for the temporary appointment and promotion of officers in the Army of the United States. Section 17 of the bill pertains to this matter, and reproduced herewith are extracts from that section:

Army Officers—Temporary Grades—Temporary Appointment of Officers in the Army of the United States—Active Duty of Reserve Component Officers

SEC. 17. (a) Whenever the number of Regular Army officers holding office under permanent appointments in the grades of major general and brigadier general is less than the number authorized in these grades and whenever the number of Regular Army officers of any promotion list, holding office under permanent appointments in the grades of colonel, lieutenant colonel, major, captain and first lieutenant, respectively, is less than the number authorized in these grades in such promotion list, the additional number authorized in these several grades may be filled by the

temporary appointment of qualified officers under the provisions of subsection (c) of this section.

(b) Whenever under authorization from time to time made by the Congress the total number of officers serving on active duty (Regular Army officers and all officers of the Army of the United States or any component thereof ordered into active military service for extended Federal service in excess of 30 days) exceeds the authorized active commissioned strength of the Regular Army, the Secretary of War shall determine the requirements in each of the several commissioned grades based upon the total number of officers so serving on active duty and the tasks being performed by the Army and such requirements in each of such grades may be filled by the temporary appointment of qualified officers under the provisions of subsection (c) of this section.

(c) To the extent authorized in subsections (a) and (b) of this section, Regular Army officers and officers of each of the reserve components of the Army of the United States serving on active Federal duty, may be promoted to and appointed in higher temporary grades in the Army of the United States without affecting appointments and grades held in their respective components. Such temporary appointments shall be made on a fair and equitable basis, regard being given to seniority, age and selection based upon ability and efficiency under regulations prescribed by the Secretary of War. The President, may, in his discretion, from time to time, in accordance with the needs of the service, adjust dates of rank in temporary grades.

(d) To the extent provided from time to time by appropriations for this purpose, any officer of any reserve component of the Army of the United States, may, with his own consent, be ordered to active Federal duty for such length of time as the President may prescribe. The President may at any time relieve from active duty any reserve officer who is serving on active duty. Any officer of any reserve component ordered into or serving on active duty may, with his own consent, be temporarily appointed in a grade in the Army of the United States, either higher or lower than the grade held by him in such reserve component, and such temporary appointment shall not affect the appointment and grade held by him in his reserve component.

(e) In time of emergency declared by the President, or by the Congress, and in time of war, the President is authorized to appoint qualified persons (including persons who held no Regular Army or reserve status) as temporary officers in the Army of the United States in any of the several commissioned grades, and persons so appointed may be ordered into the active military service of the United States to serve therein for such periods of time as the President may prescribe. The appointment of a temporary officer, if not sooner vacated, shall continue during the emergency or war in which the appointment was made and for six months thereafter.

(f) All temporary appointments herein mentioned (officers of the Regular Army, the National Guard of the United States, and the Officers' Reserve Corps temporarily appointed in grades different from those held in their respective components, and, persons holding no Regular Army or reserve commission appointed as temporary officers) shall be made in the Army of the United States, and such appointments shall not contain any reference to any other appointment held or not held in any component of the Army of the United States. All temporary appointments herein mentioned may be vacated at any time by the President. Temporary appointments in grades below that of brigadier general shall be made by the President alone, and in general officer grades by and with the advice and consent of the Senate.

(g) All officers temporarily appointed in any grade in the Army of the United States shall, while serving in such grade on active duty in the service of the United States, receive the same pay and allowances as authorized for persons of corresponding grade and length of service holding permanent appointment in that grade in the Regular Army.

(h) Each temporary officer and each reserve officer of any reserve component, serving on active Federal duty in any commissioned grade, permanent or temporary (herein referred to as "active duty grade"), shall be entitled, while so serving, to the same rights, privileges and benefits as now or hereafter provided by law for an officer of the Officers' Reserve Corps of the same length of service holding appointment in the Officers' Reserve Corps in a grade the same as such "active duty grade" and serving on active duty in the grade held in the Officers' Reserve Corps.

Changes of Address

Since the last issue of the JOURNAL was mailed out, over 100 copies were returned because addresses were not up to date.

We make every effort to get the JOURNAL to you—but you must cooperate.

LET US HAVE YOUR LATEST ADDRESS!

An Incident On Saipan

By Lieutenant Lawrence Sanders

A battalion advanced so that a company might attack so that a platoon might assault, and it came out as they planned. The Platoon assaulted and won. Then the line of battle rolled past them. Fresh troops in unstained dungarees moved up through them; fresh troops looked at them with shocked eyes and trembling lips.

The Platoon rested and tried to sleep. The Platoon cleaned its weapons and licked its wounds, let the thought of death fade and grow hazy. Then, after a week, orders came to go forward, to mop up behind the rapidly advancing line.

Then the Platoon groaned, cursed, staggered to its feet. Then the Platoon felt for its weapons and lurched forward, into the cane fields, the dusty roads, into the heat, the misery, with the thought of death once again bright and threatening.

The jungle ends. To the front, cleared ground and cane fields, then a gently rising slope hiding what is beyond. On the left, the sea. On the right, naked cliffs. Nowhere to go but straight ahead, straight across the open ground, straight down the corridor formed by the sea and cliffs.

The Platoon halts at the edge of the open ground.

A month ago the Captain was young and commanded a company. Now he is old, commands the remnants of a battalion. Now he is resigned to sending friends to their death.

"All right," he says wearily. "Let's get moving."

The point squad deploys on a line of skirmishers and starts moving out slowly from the edge of the sheltering jungle, out toward the threatening slope.

"Wait a minute," Drake calls. "Hold it up."

The corporal leading the skirmishers looks back puzzled.

"I'll take a look," Drake offers.

"The hero," Ryan says. "The big shot."

The Captain shrugs. "Go ahead," he says. "LaFarge, you hold it up till Drake clears the ridge."

Drake starts off at an easy trot, his rifle gripped at the balance in his right hand. The men flop where they are and watch him swing across the open ground.

"Fool," someone says.

But they are quiet, breathless, proud, watching Drake go forward steadily.

"Hell," Ryan says to no one. "Showing off, is he?"

Before they can stop him, he is on his feet. He sets off at an awkward run, holding his automatic weapon in front of him.

"Drake," he screams. "Drake."

Drake turns and waits for him to catch up.

Ryan comes up, red-faced and wheezing.

"All right, hero," he says. "I'll play your little game."

Drake smiles, and the two trot toward the high ground. Is grinning Death behind the slope, a cheek upon the polished stock, an eye upon the steady sight, a finger waiting on the trigger? Their flesh cringes before the expected smack of the sniper's bullet.

The Platoon watches breathlessly. No shots yet. Are the Nips gone? Have they all been cleaned out? Drake and Ryan are almost at the ridge.

"You must be wanting that gold bar pretty bad, momma's boy," Ryan says.

Drake looks at him. "No one asked you to come."

Ryan spits. "You got too much education, wise guy. You got too much education to have any sense."

Drake is silent. The two men head toward a break in the high ground, a shallow saddle going over the ridge. Ryan is breathing heavily.

"I'm going to catch up with that wise puss of yours one of these days, hero," Ryan gasps. "I'm going to smear that wise grin all over your pretty face. You and I got something to settle."

Drake walks steadily to the top of the rise, stops, shields his eyes, looks around. Ryan plods up after him. There are no shots. Nothing. There are cane fields ahead on rolling hills. The ruins of farm houses. The clear blue sea to their left. Cliffs and mountains on their right curve around to the sea a few miles in front of them. All that remains are a few miles of cane fields to mop up.

Drake turns and signals. The Platoon breaks from the concealment of the jungle and starts moving up. Ryan sits down and opens his canteen.

"Yeah, hero," he says, "You and I got something to settle."

"Any time," Drake says. "Any time at all."

The fourth week on Saipan. The main line has swept forward and engulfed this pocket of cane fields inclosed by cliffs and the sea. All that remains is mopping up, combing the fields, sealing the caves, burning out those who remain, digging them out, blasting them out, starving them out, killing them.

Nervous work, mopping up; dirty work, going forward over our own dead; slow work, cautious work, work that leaves the body aching and the mind numbed, the nerves raw and the muscles quivering.

There are civilians hidden in deep caves and in the fields of cane. They destroy themselves rather than surrender. Women and children plunge over cliffs. Men grasp grenades to their chests. Families blow themselves to red shreds.

Evil work, mopping up; killing civilians and toddling children who greet you with grenades beneath their shirts. Death hides in the caves and in the cane fields. There is no relief, just the dust, the heat, the sun a white blur in the murky air.

Ryan, Pop, and Drake lead off again and move over the rise into the cane.

Ryan is point, cradling his automatic weapon in his arms. He's a big man, red-faced, tough. Drake, silent, light-footed, slim, is on his right. Pop, too old for this kind of work, follows slowly, dragging his feet.

Ryan takes a breath to yell a warning, but it's too late. A grenade sails at them, and they flop. Ryan trips off a burst as he falls. The grenade bursts near them, then two more ahead of them, and they know the enemy has destroyed himself again.

Ryan and Drake drag themselves to their feet, but Pop is down, his right arm a red, ropy mass. He looks up accusingly at them.

"So," he says.

"Take it easy, pop," Ryan says, kneeling by him. "They're right behind us. They'll have you out in no time at all."

"Yeah," Pop says.

"You're out of it, old-timer," Drake says. "The war's over."

"Sure," Pop says.

Drake and Ryan push ahead. The sun is hot and bloated in the sky. The cane fields are a hell of heat and dust. The cane is breast-high, clinging. Dust sifts into their eyes, cakes their throats, chokes their nostrils, itches down under their sweat-stained jackets.

"Hey," Ryan calls,"look at this."

He has found a wooden cover flush with the earth, a cover that might be over a well or cesspool.

"Water?" Drake looks at him.

"Maybe," Ryan says. "Stand clear." He takes the cover by the edge, flips it over, and jumps clear. There are no shots, nothing.

Drake peers in cautiously.

"Look here," he says to Ryan. It's a cement-lined pit, ten feet deep. On the bottom lies a naked male Japanese, blinking up at them. His eyes are glazed with sake or dope.

"How the hell did he get down there?" Ryan asks. "Hiding, is he?"

Drake shrugs. In Japanese, he tells the man to stand up and climb out. He asks him his name. He asks him how long he's been down there. The man blinks his glazed eyes at them.

"Leave him," Drake tells Ryan. "They'll get him out. We can't waste time."

"Maybe he's got a rifle," Ryan says.

"Where? He's naked."

"Maybe he's lying on it."

"No, there's nothing down there."

"Maybe we'll pass, and he'll come up and toss a grenade at us."

Drake looks at him puzzled. "He can't get out," he says. "Let's go on."

Ryan's face splits in an awful grin. "What's the matter, momma's boy?" he says.

Drake understands. "Please, Ryan," he says. "Please."

"Chicken," Ryan says.

He flips off the safety and laces the bottom of the pit with his automotic weapon, back and forth. The naked man threshes and dies.

"Murderer," Drake says coldly.

"Murderer?" Ryan laughs. "That's good, that is. Ain't we all, brother. Aint we all."

Drake's lips are tight. Ryan has never seen a man's face so coldly furious.

Drake looks at him. "I never killed a man like that," he says softly. "I never will."

"Shall we go?" Ryan says, bowing politely. "After you, my dear fellow."

They move away into the cane fields. They top a slight rise, and a mile beyond the fields are high cliffs, scarred and shattered. The dead, theirs and ours, swollen and puffed, rest in the fields, their placid faces turned to the sun.

"We better wait," Ryan says. "Maybe the Captain can get a tank up here. Those cliffs look bad. Mucho caves."

Drake nods agreement. They go back to the Platoon.

"All right," the Captain says. "I'll try to get one. You men stay here. LaFarge, take over. Put three men out front. Drake, you come with me."

The Captain and Drake walk back to the road beyond the jungle.

"Hot," the Captain says.

Drake nods.

"Should be relieving us soon," the Captain says. "It's not right."

"No, it isn't," Drake agrees.

"What do they think we are? My God. What do they take us for? How much do they think we can stand?"

Drake nods. They come up to the tank. Four tank men are sitting in the shade of the tank. Their dust-caked faces are streaked with rivulets of sweat. Their leather helmets hang from the gun barrel. The tank men are drinking Nip beer. They have a sack full of Nip beer.

"Who's in command?" the Captain asks.

"I am," one of them says. "I'm a sergeant."

"Who's your commanding officer?" the Captain asks. He kneels on one knee and rests his weight on his carbine.

"Ain't got none," the sergeant says. "They're all dead."

"We got some cliffs, sergeant," the Captain says. "Can you come up and go over them for us?"

"Why, captain," the sergeant says, looking at him, "we're out of fuel. Hardly got any ammo left. We're mighty tired."

"You're tired?" the Captain says. "You're tired?"

"That's the way it is, captain," the tank man says.

The Captain climbs wearily to his feet. The four tank men sit there and look at them.

"We really are out of fuel," the sergeant says. "Sorry we can't help you out."

"That's all right," Drake says.

"Want some beer?" the tank man says. "We got some Nip beer."

"No, thanks."

"Wish we could help you out," the tank man says. "But that's the way it is."

"You shut that big, wise mouth of yours or I'll knock your damned head off," the Captain shouts.

"Come on, Captain," Drake says. "We got to get back."

"What's he getting so hot about?" the tank man says to no one as Drake and the Captain leave. "What right has he got to be getting so hot? Nothing I can do about it."

Drake and the Captain come back to the Platoon resting in the cane field.

"LaFarge," the Captain says, "go back to the CP and tell them where we are. Who's up ahead?"

"Collins and the Lester boys," someone says.

"All right," the Captain says. "Take another ten."

"You look a little beat, hero," Ryan says to Drake.

"Take the needle out of me, will you?" Drake says.

"What's the matter, hero?" Ryan grins. "Nerves stretching a little? Getting a little nervous?"

Drake looks at him without answering.

"One of these days Drake'll blow your brains out," someone says to Ryan.

"Him?" Ryan says. "The hero? Not a chance. He ain't got the guts. Have you, momma's boy?"

Drake looks at him.

"How about it, momma's boy?" Ryan asks him. "When are you and me going to go round and round together?"

"Tonight," Drake says. "When we knock off tonight."

"Swell," Ryan grins. "Say, that's swell. You guys hear that? Momma's boy and me are going to have our own little war, our own little battle, tonight. How you want it, hero? Knives? Pistols? Fists? How'll you have it?"

"I don't care," Drake says wearily. "I don't care at all. Any way at all."

"Fists," Ryan says. "Just knuckles. You guys know what I'm going to do to our hero? Boy, this is what I've been waiting for. This is what I've been staying alive for." He glares at Drake.

"Murderer," Drake says coldly.

Ryan starts up. Drake looks at him steadily. Ryan sits down again and laughs, thin and hard.

"Okay," he says, "I can wait. First I'm going to smash your nose flat against that white face of yours. Then I'm going to chip off some of them pearly white teeth. I might even break that nice long jaw of yours, hero. When I get through with you, even your own Mother won't want you. You might even get a Purple Heart out of it, sweetheart; you can't tell."

"Ryan, you're sick," someone says. "There's something wrong with you."

Ryan shows his teeth in a grin. "Nothing wrong with me a little fight won't fix. Nothing wrong with me that killing momma's boy won't cure."

Drake gets up and walks away. He walks over to the edge of the cane field and sits down.

No one knows the cause of the feud between Drake and Ryan. Perhaps they too have forgotten the cause. It is lost and dim, far back in the forgotten world before the landing. Now only the hate is remembered, only the fury recalled.

"You're sick," someone says to Ryan. "He's the only thing that's kept you going. Hating Drake is the only thing that's kept you alive. You'd be lost and gone without Drake to hate."

"You're crazy," Ryan says, looking down at his twisting hands. "You're off your rocker."

They look at him. No one speaks.

"All right," the Captain says. "Let's get moving."

The men stand up and check their weapons.

Ryan and Drake go up and send the others back. Go until you're in range of the cliffs, and then hold it up. We'll try to clean this cane field by tonight."

"How about the cliffs?" someone asks.

"We'll get a tank tomorrow," the Captain says. "Maybe they won't be tired tomorrow."

Ryan and Drake move out across the cane field passing through the outguards. Ryan has his automatic weapon cradled in his arms. Drake still has his rifle.

"Now be careful, chum," Ryan tells him. "I don't want you to go get killed, not before tonight that is. I want you all rested and well for me tonight."

Drake smiles at him. "I feel sorry for you, Ryan."

"Sorry for me? Listen, hero, ain't nobody has to feel sorry for me; see? I'm okay. I'm okay."

Drake moves steadily through the cane, his head turning on a pivot. He nods toward the ruins of a farm building. "Let's take a look," he says.

They move over toward the building. Nothing left but crumbled mud walls, a frame, a swept dirt floor. Drake steps up on what's left of the wooden porch, and a bullet whines past his head.

Drake dives behind a wall, and Ryan flops where he is. Rifle fire is opened on them from the field in front and to their right.

Ryan squirms up behind the wall, and the two crouch there.

"We must have passed them in the cane," Drake says. "The Captain will come up as soon as he hears firing."

Bullets chip pieces from the wall near their faces. Ryan wipes blood from his cheek where a splinter has gouged a furrow.

They face in different directions. Occasionally they fire into the cane.

"How many on your side?" Ryan asks.

"Two."

"I got one up ahead. You sit tight. I'm going back a little and get a bead on that guy."

Drake keeps up sporadic fire. Ryan worms his way across the dirt floor and fires a blast from under a window ledge. He grunts with satisfaction.

"Get him?" Drake asks.

"Yeah."

"Should we rush them?"

"Hell no."

"Frightened?"

Ryan looks at him and licks his lips. "I sure am going to enjoy beating the be-jeezus out of you. I sure am going to enjoy that."

There is much firing outside, the explosion of grenades, the shouts of the Platoon.

Drake risks a look. "It's all right," he tells Ryan. "They're coming up. They got them. I can see the Captain. It's all right."

Ryan relaxes and lights a cigarette. He starts reloading his weapon.

"I could kill you right now," he taunts Drake. "I could cut you in two with baby here, and no one would be the wiser." He pats his weapon lovingly. "I could cut you in bloody two, and they'd think the Nips got you."

Drake smiles at him mockingly. Ryan chokes over the smoke in his lungs.

There is a soft call, "Joe, Joe, where are you?"

Ryan gives an answering bellow. They get to their feet.

A Japanese grenade sails through the air and thuds to the ground between them. They stand and stare, frozen. The grenade rolls a little toward Ryan, black, solid. It rolls to a stop in a little hollow in the earth. The men stare.

"What the hell," Drake says. It's the first time Ryan has heard him swear.

Drake sinks slowly to his knees. He casts his rifle from him. He melts down slowly on the grenade. He snuggles down over the grenade, pressing his chest and stomach tightly to the earth. He lays his cheek upon the earth. His lips touch the earth. He smiles up at Ryan.

The blast lifts him, and then shattered, he falls back. Limply he falls back, broken, boneless, rags.

Ryan still stands. He stares curiously. A thin strand of saliva loops down from the corner of his mouth.

One of Drake's hands has been blown off at the wrist and lies in the dust like a white glove tossed aside. Ryan bends over and touches the tips of the limp fingers.

"Drake?" he says. "Drake?"

The men come up. They stand grouped in a half-circle behind Ryan.

"He flopped on it," Ryan says, turning slowly to look at them. "He flopped right over it."

"All right," the Captain says. "Let's get moving. DuBois and Vanelli, lead off toward the cliffs."

The men move off. Ryan stands and stares.

"A nice guy that Drake," someone says.

"Yeah," someone says. "Too bad."

"It's always too bad," someone adds.

After awhile Ryan moves after them. He is in a daze, numbed. His eyes don't see, nor do his ears hear. His lips move a little. "Drake?" he's saying. "Drake?"

That night he doesn't sleep. He lies awake and stares into the darkness. He looks at his own hand, white in the darkness. He moves the fingers, watches the tendons and muscles flex and contract, grip and expand. The living flesh.

The next morning they gather again.

"All right," the Captain says. "Let's get moving."

They move out into the cane field. Ryan is dragging his feet in the point squad.

A sudden rattle of machine-gun fire, and the men melt into the earth. Someone curses in Italian. "At the edge of the cliff," someone says. "In the cave."

A curly-haired child slips grenades from his shirt front and starts sliding through the cane toward the cliff.

But then Ryan is on his feet. He looks around him.

"Ryan," someone shrieks. "Get down, you fool."

Ryan's dead eyes peer around him. He starts walking toward the cave. The gun is silent.

"Ryan!" the Captain screams. "Ryan!" But he is not heeded, nor is he heard.

The gun lets him come quite close. The gun lets him get quite near. The gun is quite silent, waiting.

The gun chatters angrily. There is silence.

Later, when the point squad moves up, they pass Ryan pressing his cheek into the damp earth. His lips kiss the earth. He is almost cut in two.

The men look down at him.

"All right," the Captain says. "Let's get moving."

ABOUT OUR AUTHORS

Colonel Stephen M. Mellnik was taken Prisoner of War when Corregidor was surrendered in May 1942. After almost a year of incarceration, he escaped and became a guerrilla fighter on Mindanao. When our troops arrived there, he was returned to General Headquarters SWPA where he served until his return to the States in April 1945. (Page 2.)

Dr. Ernst H. Krause became affiliated with the Naval Research Laboratory in 1938 after receiving his Ph.D. from Wisconsin. Since joining the Laboratory staff he has held numerous positions including Head of the Guided Missile Subdivision and Chairman of the V-2 Upper Atmosphere Research Panel. At present he is Head of the Rocket Sonde Research Section of the Naval Research Laboratory. (Page 8.)

Lieutenant Colonel David B. Parker follows his article on atomic energy in the last issue with an appalling tale of fiction based on scientific fact. Colonel Parker is now attached to the Atomic Energy Commission in Washington. (Page 12.)

Dr. R. E. Gibson served as Chairman of the Rocket Propellant Panel of the Joint Committee on New Weapons and Equipment from 1942 to 1945. This group was concerned with steering the efforts of all service agencies engaged in the development of solid rocket propellants. At present he is a member of the staff of the Applied Physics Laboratory, Johns Hopkins University. (Page 15.)

Dr. A. Kossiakoff obtained a leave of absence from the faculty of Catholic University of America in 1942 to serve with the National Defense Research Committee in the section which was developing military rockets for the Armed Services. After the end of the war, he joined the staff of Applied Physics Laboratory, Johns Hopkins University and now is responsible for the development of launching devices for guided missiles. (Page 15.)

Lieutenant Colonel Leonard M. Orman needs no introduction since this is his eighth article in as many issues. For our new readers, he is an instructor in the Department of Electronics and Electricity at the United States Military Academy. (Page 22.)

Major Ralph M. Rogers has been Technical Operations officer of the 1st AAA Guided Missile Battalion since November 1945. (Page 28.)

Stefan T. Possony served as consultant to French War Agencies during 1939 and 1940. From 1943 to 1946 he served in the office of Chief of Naval Operations, Navy Department. Dr. Possony is now Professor of Geopolitics at Georgetown University. (Page 30.)

Colonel John H. Madison is Director of Instruction for the AA and Guided Missile Branch, The Artillery School. (Page 33.)

Walter H. Wallace was Ordnance Engineer, Hq AAF until recently. He has worked on guided missile warheads for the last year and is the author of two compilations of warhead data issued by Headquarters, AAF. (Page 35.)

Major Hal D. Steward, Associate Editor of the *Armored Cavalry Journal*, recently made a 10,000-mile air tour of Alaska and the Aleutian Islands to gather this report on Task Forces Frigid and Williwaw. (Page 37.)

Lieutenant Colonel William R. Kintner is another frequent contributor. He is assigned to the G-2 Section, War Department and is now attending a two years' course in Political Science and International Relationships at Georgetown University. (Page 41.)

Lieutenant Lawrence Sanders adds another interesting fiction story to his growing list for the JOURNAL. As you have probably guessed, he served both as an enlisted man and officer in the Marine Corps and is now engaged in a variety of writing. (Page 47.)

Colonel Leslie E. Simon has been at the Ballistic Research Laboratories for over nine years and their Director for over five years. His specialized field is Statistical Quality Control, concerning which he has written a popular textbook. (Page 55.)

"FLAK"*

Some Comments On The German Antiaircraft Defenses 1939-45.

By Brigadier G. L. Appleton, O.B.E.

It is not generally realized how great an effort was devoted by Germany to the antiaircraft defenses of the Reich. The Luftwaffe was principally responsible for this task, although the Navy provided its own antiaircraft defenses for its shore bases while the Army included antiaircraft units in its mobile field formations. From a comparatively modest establishment in peace, the "Flak" organization of the Luftwaffe expanded rapidly during the war until it reached its peak in mid-1944. At that time the force employed was of the order of one and a quarter million. This included more than a quarter million auxiliaries of various kinds, including a large number of women auxiliaries, prisoners of war and foreigners of various descriptions. The equipment operationally employed comprised some 15,000 heavy guns, 25,000 light guns, 7,000 searchlights and 2,500 balloons. This effort may be related to that of Great Britain in roughly comparable circumstances. In Germany, with a population of some 70 millions, the Germans employed in the Luftwaffe Flak alone about 1½ per cent.* In the United Kingdom, with a population of about 45 millions, approximately ½ per cent were employed in antiaircraft defense.

The Germans were fully alive to the fact that their war effort was, in the last resort, entirely dependent on the safety of their industries. Their first conception, therefore, was to provide an over-all defense for each of the major industrial areas. As the Allied bomber effort increased they found that it was impossible to defend every area adequately. They tended more and more to concentrate their waning resources on the defenses of the really vital targets, for example the oil refineries. An outstanding example of the latter was the Leuna area, containing nearly 600 heavy guns. 14 Flak Division, manning these defenses, claimed 216 aircraft shot down in the second half of 1944, while effective bomb hits on the refineries fell to a low figure.

The emphasis on weight of fire and concentration of effort over vital targets led logically to the formation of large fire-units which, incidentally, afforded a welcome economy in command and fire-control personnel. The original unit of four heavy guns became a six-gun unit. This tendency continued until eight and twelve-gun sites made their appearance, while one or two sixteen-gun sites existed. A variation was the tactical combination of two or three individual four or six-gun sites with a common command post and fire-control equipment.

Under the increasing weight of Allied air attack in 1942-43 and the pressure of shrinking resources of Flak manpower and matériel, it was not surprising that the Germans endeavored to redress the balance by mobility. One means to this end was a considerable mobile echelon of heavy flak weapons on railway mountings. At first sight the conception of railway flak capable of rapid movement is attractive but the drawbacks, which caused the British to reject the idea for use in the United Kingdom, outweigh the advantages. Among the principal disadvantages are, first, the tactical inelasticity of a railway system which does not allow guns to be sited precisely where they are wanted; secondly, the risks of railway tracks being cut, thus immobilizing railway guns; and, thirdly, the vulnerability of railway guns and fire-control systems which are not readily protected from bombing.

What must be regarded as major eccentricities are the "flak towers" of Hamburg and Berlin. These are vast concrete structures sited in pairs; one tower in each pair carried four 12.8cm guns and the other the fire-control instruments. The tactical value of these towers was dubious and did not warrant the immense cost of construction merely as gun platforms. They did, however, provide valuable air raid shelters and were said to be capable of accommodating 10,000 or 15,000 people each. None the less it is difficult to conceive how the Luftwaffe managed to justify the immense expenditure of labor and material, even though the towers were erected at a time when ample supplies of both were available.

The German employment of searchlights is of interest. At the time when the British were developing their "carpet" of searchlights all over England and southern Scotland as an aid to fighter interception, the Germans erected a great belt of searchlights for the same purpose from Holland, through Belgium to Northern France. This belt, although of considerable moral effect, rendered no great assistance to German fighter aircraft. In April, 1942, when the Germans had achieved some success in providing radar control of

*Reprinted, courtesy of *The Journal of the Royal Artillery*.

*If the same percentage were applied to the United States, it would mean that 2,000,000 men would be assigned to the antiaircraft defenses of this country.

night fighter aircraft, this belt was abandoned. The searchlights were redeployed in the principal gun defended areas. Here they played an important part in the defenses, not only in illuminating aircraft for engagement by the guns, but also in producing the strong moral effect which bomber crews so often mentioned.

The standard service guns with which Germany began the war were the 8.8cm heavy gun and the 2cm light gun. Both pieces of equipment were excellent of their kind. The 8.8cm gun was comparable in performance with the British 3.7 inch gun. It came particularly into popular prominence with the British press, when it was first employed (and, incidentally in qualified German opinion, misused) as an antitank weapon in North Africa. The Germans were not content to conduct the war with these weapons alone, and introduced in smaller quantities, the 10.5cm and 12.8cm heavy guns together with a 3.7cm light gun. These weapons, too, were of high technical quality. An intermediate gun, the 5cm, was fully developed but no production capacity could be made available for its manufacture in quantity.

The Army made considerable use of the 8.8cm Flak gun as an antitank weapon and in support of ground forces. There is no doubt that this gun, as distinct from its mounting, was effective as an antitank weapon and, to a less extent, as a long-range medium gun for the engagement of ground targets. The same is true of the British 3.7 inch antiaircraft gun. The sinister reputation of the 8.8cm gun in the North African campaigns will be remembered, although the popular Press, with frequent references to "nests of 8.8cm guns" and their deadly efficiency and so on, unwittingly did much to produce an unfortunate 8.8cm complex in the mind of the public, and even of the Army, which was not justified. The High Command decided, however, that the 8.8cm equipment as a whole was not suitable antitank equipment. Its carriage was not designed for the purpose. It was very exposed and only very lightly shielded. In consequence, casualties to gun detachments and to equipment, when used in the forward area in support of ground troops, were excessive and unsupportable. As a result, flak units thus misused and expended were not available for the role for which they were provided, the defense of the Army against air attack. Thus the High Command in 1943 strictly forbade the use of heavy flak guns in a ground role except in the gravest emergency. That this precept was often ignored during the 1944-45 campaign in the West is evident from the frequent wreckage of 8.8cm guns, which one often saw by the roadside, where they could only have been employed in a ground role. Furthermore, this was at a time when antiaircraft protection was even more important than ever before. This tendency to misuse antiaircraft artillery is not peculiar to the German Army and has been found sometimes even in the British Army. It perhaps arose in both armies from a lack of real comprehension by the staffs of the needs of antiaircraft defense for armies in the field. This was combined with a natural desire to use all available gun power against the opposing enemy ground troops. Naturally, the propriety of diverting antiaircraft artillery from its primary role to a secondary ground role is entirely dependent on the air situation. In conditions of complete air superiority such a diversion is not only entirely proper, it is also economical.

German fire-control equipment was of a high order of design and workmanship. But the development of defensive equipment such as flak had been given a low priority in the victorious years of 1940 to 1942. As a result, at the end of the war, the Germans possessed neither electronic predictors nor radar comparable with the British GL III, much less the American SCR 584. It was not until 1943, when the results of the Anglo-American bombing offensive were becoming painfully evident, that the development of flak matériel was accorded the highest priority. The technical weakness of German radar equipment was brought into prominence in the so-called "catastrophe" of Hamburg on the night of 24/25 July 1943. This date is still an historical landmark for the inhabitants of that city who refer to events as taking place before or after "the raid." For a year prior to that date, the German night fighters, in cooperation with the flak defenses, had succeeded in inflicting serious losses on night bombers whose tactics of staggered approach over a period of long duration were well suited to the German night fighter procedure. On that night the attackers adopted new tactics and came over in massed formations. In addition they scattered copious quantities of the radar-jamming "window." The radar control of the German fighters and the radar fire-control apparatus were completely upset and the bombers were able to strike a shattering blow on the great city. It was at once evident to the Germans that the ability of their flak defenses to engage the enemy with accurate unseen fire was seriously prejudiced. They were often forced henceforth to adopt the retrograde step of relying on inaccurate and expensive barrages. The vast expenditure of ammunition occasioned thereby was to cause them serious concern as the war continued.

The experiences of 1943 and of Hamburg in particular caused a radical change of policy. The development of flak equipment was thereupon accorded a high priority. Although the war ended before radically new materiel reached the troops, much useful work had been achieved in the design and development establishments. It was apparent to them, as it was to us, that the rapid development of speedy, high-flying and heavily armored aircraft was fast making the existing antiaircraft equipment obsolescent. The first and obvious step was to improve flak guns and ammunition on orthodox lines. The majority of the new projects designed to attain increased operational ceiling and shorter times of flight were paralleled to similar projects in the United Kingdom. Among the more interesting were smooth-bore guns firing fin-stabilized projectiles and super-velocity guns employing the "sabot" or sub-caliber principle. The tapered "squeeze-bore" which had already had some success in antitank weapons, was also under trial.

Some improvements in ammunition were achieved and put in the hands of the troops. Among these were, firstly, segmented H.E. shells which produced larger and harder hitting fragments and, secondly, incendiary shrapnel. The latter on bursting produced a shower of incendiary pellets each provided with a miniature fire. These were designed primarily to penetrate fuel tanks and to cause fire. The Germans considered this shell to be a successful innovation. Several projects for "proximity" fuzes were under devel

ment but none of these reached the troops. None are believed to have achieved the success attained by Anglo-American projects of this nature.

The Germans considered, with justification, that successful ground action against high-flying aircraft in the future did not lie with the gun, however powerful, but that efforts must be directed towards a radically new solution. They thought that they had found this in the guided projectile. Even before the war, a large effort had been devoted to rockets and jet-propelled projectiles of various types, of which the V1 and V2 are familiar examples. An antiaircraft projectile remotely controlled from the ground, and perhaps "homing" automatically on an aircraft was a logical development in this field. Several types of this nature were in a high state of development at the end of the war, the most noteworthy being those known as "Wasserfall," "Schmetterling" and "Enzian."* The Germans hoped that with weapons such as these and given a successful proximity fuze, they had an answer to the massed bomber raids which were causing such havoc. The progress in this field was noteworthy, and indeed some rocket designs such as that of V2 were most distinguished achievements. None the less, success was far too late to affect the issue of the war. The fruits of their endeavor were fated to fall into Allied hands before they could be used against their aircraft.

To the British antiaircraft gunner there is much interest in observing how the Germans were faced with technical and organizational problems which were similar to, and often identical with, those with which we ourselves had to deal. From the technical aspect, German research and development in flak ran largely parallel to our own, but as has already been observed, in arrear in point of time. This was not the fault of the German scientists, whose ability was of a high order. One major reason is that a period of German offensive success covered the first two years of the war. The natural result was a tendency to devote their resources to the development of offensive rather than defensive weapons. It was not until 1943 that the possibility of a defensive war began to become apparent. The British, on the other hand, were thrown on the defensive in 1940 and 1941. In consequence, the political and service backing for intensive flak development in Great Britain was powerful and sustained, and gave us a technical lead which was maintained until the end. This, incidentally, enabled us to develop such an effective antiaircraft defense against the flying bomb. If the sequence of events had been reversed, and Great Britain had passed through an initial period of successful offensive, it is questionable whether the striking technical advances in British antiaircraft gunnery would have been made.

A major point of interest to us is that the flak defenses of the Reich were an integral part of the Air Force and not of the Army. This is a conception which has often been suggested for the antiaircraft defense of Great Britain. It is interesting to observe that the principal advantage claimed for such an arrangement, the integrated tactical control of fighter and flak defense, was not achieved by the Germans. The two arms were distinct and separate. While a single local commander from either arm was often nominally in charge, liaison procedure was usually necessary and frequent dissensions between "air" and "flak" took place. The relationship of the British A.A. Command to Fighter Command was more highly developed and satisfactory although these two formations belonged to separate Services.

The question may well be asked whether the results of the German flak effort were commensurate with the expenditure of manpower and industrial resources. That significant losses were caused to the Allied bomber force is unquestionable. There is no doubt, too, that heavy concentrations of flak over the important industrial areas had an important effect by adding considerably to the nervous strain of operations and thereby contributing to aircrew wastage. The very heavy concentrations over a few vital targets such as Leuna, introduced in the last few months of the war, approached the border line of completely effective antiaircraft defense. Losses could be inflicted which might be insupportable over a long period and accurate bombing rendered difficult if not impossible. If, during the last two years of the war, the Germans had been able or willing to pursue consistently this militarily correct policy of concentration over a comparatively few vital areas, the key industrial plants, such as the oil refineries, might well have had a longer life and the war might have been prolonged thereby. The answer to the question postulated at the beginning of this paragraph is probably in the affirmative. The Germans could have made effective use of far greater flak forces and made considerable efforts to find them. It was only the eventual shortage of manpower and industrial resources which prevented their production.

*See article, "Warheads for German Antiaircraft Guided Missiles," page 35, this issue.

UNIT HISTORIES

Many of the histories of the various armies, corps, divisions and some antiaircraft battalions are available while others are now being prepared. The JOURNAL now has a fairly complete list of histories written or being written so don't hesitate to request information from us regarding the one in which you are interested.

THE SOLDIER'S SOLDIER

When General Stilwell died, his loss was mourned throughout all ranks and branches of the service because of his overwhelming interest in soldiers.

The affection he felt for the fighting doughboy and for the Combat Infantryman's badge are well illustrated by the fact that he once told a friend that there was just one medal he would like to have and wear but he had never been able to get it. That medal was the Combat Infantryman's badge and when General Stilwell said he envied all who wore it, the tribute was unquestionable.

This badge which he coveted so much was awarded him by Secretary of War Patterson only a few hours before his death.

Although a professional soldier, General Stilwell understood the civilian soldier and in his farewell message to the Tenth Army all the humanity and depth of feeling which characterized this understanding, are brought into sharp focus.

This message in its entirety is reproduced herewith through the courtesy of the *Infantry Journal*.

"Now that you are on the way back to the farm, the shop, the desk, or the mine, or soon will be, listen to a few words from an old brass hat who has watched the generations pass by. You are not required to listen any more; nobody can call you to attention; you are free from red tape, discipline, censorship, and restrictions; the wraps are off you at last. But give me a chance to speak to you briefly with the wraps off me, too. Even brass hats are tied up in red tape, and sometimes they don't like it any better than you do.

"My great regret is that I can't expect to go along with your generation very much longer. I have seen how you respond in a crisis, and it is okay. I have heard you cuss and gripe, and that's normal and proper. You can take it on the nose, and you can dish it out, with interest. You have made the grade, as soldiers, sailors, and marines, and you can have my shirt any time you need it.

"When you get home, they will make a fuss over you. They will be shouting, 'Welcome home, heroes,' 'The thanks of America,' etc. How you will squirm and wish you could get down to Clancy's with the boys! All you can do is sweat it out, make your speech, and be thankful it doesn't last very long.

"The home folks think a lot of you and they will only be trying to show their appreciation. You want your own people and your own community to feel that you made good, anyway. They never doubted that you would; it was only you who had any qualms about it. And here is where you cash in; you have been through the mill, you have stood the gaff, and you have the satisfaction of accomplishment that nothing can buy. That is the real reward of your service. From now on you can live with yourself without regrets.

"But unless I read you wrong, you will not think your work as Americans is all done because the war is over. In the face of aggression, we got together and submerged all our little differences. In the big issues, everybody came through. You did not hesitate to go forward and pull a buddy out of machine-gun fire at the risk of your own neck. And it didn't count that you were maybe a college graduate and he never got beyond the eighth grade, because you know he'd have done as much for you. You wouldn't know who were Protestants, Catholics or Jews in your company, who were union men and who were non union. It wouldn't have made any difference anyway.

"The war has proved the essential cohesion of America. If the Germans and the Japs had looked us over carefully and had had the brains to evaluate what they saw, they would never have been crazy enough to try to pull us down. If we can lick a problem such as this war has been, are we going to let the comparatively minor problems of peace bother us? Why, if we put the same effort on solving our domestic problems that we have put on licking the Germans and the Japs, we could make over the United States of America the way we'd like to have it.

"It is too much to expect that we should continue the same pace when the urge is gone, but 11,000,000 ex-servicemen can have a lot to say about what we will do. I am sure of one thing—you like the way America is headed or you wouldn't have put up such a fight for it.

"Maybe in the near future your machine gunner will make a million dollars and you will run a filling station. What the hell! It may be that you will make the million and the gunner will run the filling station. That's America —everybody on his feet, and nobody on his knees.

"One more thing before I stop talking. You have left your outfit and exchanged the bugle for the alarm clock, but you will never be alone again. There are 11,000,000 men now who belong to the same club you do, who have had similar experiences. You have, all of you, seen a lot of the world and can better appreciate what we've got in the United States of America. Because I have faith in the outlook and ideals of your generation, I should like to live long enough to see what you do with your opportunities. But though it is a fine day in the morning for you, it is getting late in the afternoon for me.

"Good luck, soldier, I am proud to have known you."

Instrumentation For Guided Missiles*

By Colonel Leslie E. Simon, Ordnance Department

The Ordnance Department began its supersonic tunnel in 1939 in response to a suggestion from Professor Theodore von Karman. The first step consisted of thinking and planning, with the assistance of the best minds in the country as advisors. Concurrently, work was begun on a free-flight range or aerodynamics range in which the motion of a model can be measured accurately throughout its flight and the accompanying phenomena in the surrounding air measured at least approximately. The free-flight range is needed in connection with calibration of the supersonic tunnel and for measurements at velocities near the velocities of sound where no wind tunnel can function. It required over two years to develop the free-flight range under the direction of one of Professor von Karman's most promising young assistants, Dr. Alexander C. Charters.

The second step was the construction of a model tunnel, only two and one-half inches by two and one-half inches in working section. This tunnel was built with the assistance of the National Defense Research Committee and operated for over two years on small missiles, such as Caliber .30 and Caliber .50 bullets, in order to obtain the operating techniques and the basic design data for the large supersonic wind tunnel. Finally the construction of the tunnel was begun in 1943 and useful work in the wind tunnel began in the Fall of 1944.

It required a staff of approximately 100 people to man the supersonic tunnel on a three-shift basis. The cost was $2,000,000. It worked from the beginning. Its successful functioning from the very opening was due to the excellence of scientific guidance available to the Ballistic Research Laboratories, which had not only an outstanding scientific staff but had also a civilian scientific advisory committee composed of the leaders in the fields of science supporting ballistics. This committee has guided the Laboratories since their inception both in policy and in problems of major difficulty.

The fundamental purpose of a wind tunnel is to obtain measurements of the air forces which will be valid for missiles in free flight. Therefore, if it had not already become apparent before the construction of the tunnel, it would certainly become apparent immediately afterwards that it is a prime necessity to have, along with the wind tunnel, some method of measuring the forces on objects in free flight in order that wind tunnel techniques may be developed to the extent required to reproduce free-flight results. Since the Ordnance Department's Ballistic Research Laboratories had developed a free-flight aerodynamics range before the construction of a supersonic wind tunnel, the facilities were already at hand by which accurate comparison could be obtained of wind tunnel data and free-flight data. The free-flight range was built partly in anticipation of the tunnel but primarily because of the contribution which it could make to the Ordnance Department's interest in bullets and shell, which have been fired at supersonic velocities for decades. It is only recently that agencies other than the Army or Navy have had any great practical interest in supersonic phenomena.

Another important function of the free-flight aerodynamics range should not be overlooked, that is, to supplement the wind tunnel in what may be called the wind tunnel's *blind spot*, the range of velocities near the velocity of sound. At velocities slightly less than sonic, the model *blocks* the flow in the working section; at velocities slightly above, the nose waves hit the side of the tunnel, are reflected, and hit the model along the body or the tail. Thus wind tunnel measurements in this range of velocities, called transonic, cannot reproduce free-flight conditions. Incidentally, it should be remarked that the smaller the ratio of model size to tunnel size the more closely the velocity of sound may be approached from above or below.

* * * * *

Electronic measurements currently used consist in general of ordinary radar; radar plotting boards; pulse radar in which short streams of pulses are directed towards the missile, sent back by the missile, and the position calculated from the measured time interval between sending and receiving the pulse; and radio Doppler in which continuous signals are used and the position, velocity, and acceleration calculated from the change in frequency caused by the movement of the missile. Electronics is such a rapidly changing field that one sometimes hears the remark that anything written on the subject is obsolete before the ink gets dry. Models of missiles also change rapidly, each one goes farther or faster. Thus field measurement of guided missiles is one of the most rapidly changing of technical fields. Over three years of experience by the Ballistic Research Laboratories indicates that the expected life of a new instrument is about three *shoots*. By the time an instrument has been used three times, it is likely that either the Laboratories have devised a more effective method of measurement or the missile has been so improved that the method is no longer applicable. The Signal Corps, and especially the Camp Evans Laboratory, have been unstinting in their aid in the electronic measurements.

Furthermore, the instrumentation can be supported only by research personnel, not by ordinary operators nor even by routine engineers. It is only by having a research staff operating instruments in the field, coming back to the laboratory to make new instruments, and going back to the field to try the new instruments that the pace can be met. Men of vision, energy, foresight and of great native intelligence and originality must be used. Even under these conditions it takes as much as two and one-half men in the laboratory to support one man in the field.

* * * * *

*Extracts from the original article which appeared in the January 1947 issue of *Logistics*.

The support of ballistic measurements at White Sands Proving Ground alone is costing over a million dollars a year, exclusive of communications or other proving ground costs.

* * * * *

Competence in aerodynamic engineering is but a minor auxiliary to the task at hand, even less important than ballistics. The instrumentation for the development of guided missiles involves the following facilities, together with competent staffs:

1. Supersonic wind tunnels
2. Free-flight aerodynamics range
3. Powerful computing devices
4. Facilities for the measurement of the aerodynamic characteristics of full-scale missiles in free flight
5. Facilities for the study, development and testing of warheads

* * * * *

It is well known to the technical services, and has been stated in part in the press, that plans are being formulated for the construction of a score or more of supersonic wind tunnels, at stupendous cost, with single tunnels requiring as much as 500,000 horsepower, and with velocities as high as ten times the velocity of sound.

The Ordnance Department's Ballistic Research Laboratories, and about four supersonic tunnels that are operating or being prepared to operate, employ almost all of the qualified personnel that can be squeezed out of the colleges today without doing definite harm to the education of future scientists. Furthermore, the associated personnel on design, instrumentation, computation of data, and interpretation of results that would accompany the operation of a large number of supersonic facilities would exceed by several fold the number required for the wind tunnels. Hence the plans are feasible only as extremely long-range plans to be met, perhaps, by the students of students now in college.

If anything like the present scale of appropriations for guided missile development continues, there is no doubt that additional wind tunnel facilities are urgently needed. However, construction of a number of supersonic wind tunnels is now well advanced. These tunnels will be comparable in size, cost, and power requirements to the Aberdeen tunnel. A good case may also be made for the construction for a small number of tunnels of greater size than the Aberdeen tunnel. Its working section, approximately 15" by 13", cannot handle models much greater than two inches in diameter.

There are difficulties in making accurate models this small. Moreover, the successful operation of the Aberdeen tunnel gives a reasonable expectation that a somewhat larger tunnel with a working section 4' x 4' could be successfully operated. Such a tunnel would cost about $20,000,000, if it attains air speeds up to four times sound speed. But to jump now to tunnels with working sections 18' x 18' or more, and costing 100 to 200 million dollars each, is something else. Moreover, to operate such a tunnel on a one-shift basis would cost something like $20,000,000 a year.

* * * * *

While building this tunnel (which goes only to 4.5 times the velocity of sound) Ordnance foresaw even then the need for a tunnel which would go to ten times the velocity of sound. In the construction of the tunnel building, over two years ago, it built in the space, connections, and facilities for a free-flight range or aerodynamics range to go to ten times the velocity of sound. This free-flight range is now under construction and so is a model tunnel to obtain ten times the velocity of sound. The careful construction of a model (the exercise on a small scale of the scientific method of hypothesis, experiment, and test of hypothesis) is the swiftest way to construct a large tunnel. The Ordnance Department has not yet planned a Mach 10 wind tunnel because too little basic design data is yet available for the proper and logical planning of a Mach 10 tunnel.

Concurrent with research one needs continued and long-term development, supported by the required technical research and the needed facilities. The development should not aim at producing full-fledged guided missiles, ready for production in a year or two, but rather should start out modestly and proceed step by step, beginning with purely experimental missiles. Designers should learn by doing before starting in earnest on the design and construction of full-scale missiles.

It should be pointed out that no one has yet guided a supersonic missile in the generally accepted meaning of the term. The German V-2 is the nearest approach to a guided supersonic missile and, since its guidance functioned only during burning, it was guided really only in the sense that an artillery shell is aimed. The popularly called push-button warfare is only a remote possibility in the light of the present state of science.

The broad public interest in the research and development of guided missiles assures gratifying support at least for the present, but two current dangers must be recognized. Ill-considered plans for huge supersonic tunnels at excessively high speeds not only present a danger of monetary extravagance, but threaten to dissipate our resources of scientific personnel. They indicate an abdication of scientific imagination and a resort to the "brute force" method of solving engineering problems. Worse still, irresponsible and unwise management, responding more to wishful thinking than to scientific guidance, can lead the country to a state of confusion which can readily result in delaying for years the development of the guided missiles about which current enthusiasm and support has been aroused.

SEACOAST SERVICE

TEST SECTION

Any individual, whether or not he is a member of the service, is invited to submit constructive suggestions relating to problems under study by the Seacoast Service Test Section, Army Ground Forces Board No. 1, or to present any new problem that may properly be considered by the Section. Communications should be addressed to the President, Seacoast Service Test Section, Army Ground Forces Board No. 1, Fort Baker, California.

Items pertaining to Antiaircraft Artillery should be sent to the Antiaircraft Test Section, Army Ground Forces Board No. 4, Fort Bliss, Texas.

Any recommendations made or views expressed herein are those of Army Ground Forces Board No. 1 and are not to be construed as representing the opinion of all War Department or Army Ground Forces Agencies.

COLONEL R. E. DINGEMAN, Director

LIEUTENANT COLONEL JAMES T. BARBER
LIEUTENANT COLONEL GEORGE B. WEBSTER, JR.
LIEUTENANT COLONEL FREDERICK N. WALKER, JR.
CAPTAIN RICHARD T. PULLEN, JR.
MAJOR FRANCIS J. PALLISTER
MAJOR CHARLES W. ADCOCK
CAPTAIN HAROLD R. BRANTNER
1ST LIEUTENANT WILLIAM WHETTON

75mm HE Subcaliber Ammunition. The tests on the HE round for 75mm subcaliber tubes, discussed in the preceding issue of the JOURNAL, are nearing completion. Both calibration and service practices have been conducted and results have been generally satisfactory. The increased size of the splash (over the inert projectile) with resultant larger echo on the radar scope, has improved spotting accuracy. A high explosive burst adds realism to a subcaliber practice for the personnel participating in the firing.

Offset Method Firing. Study and tests on the offset method of firing with the AN/MPG-1 radar are continuing. Additional tests of photographing shell splash echoes on a second remote "B" scope have been made, both during 155mm service and subcaliber firing. Currently under study is a method of providing remote range and azimuth counters for the remote "B" scope in order that the range and azimuth at instant of splash may be recorded on the same picture.

Tests are being conducted using a 16mm movie camera, timed to expose one frame per second; also eight frames per second. (Satisfactory results have been obtained using the 35mm Leica still camera except that the required hand operation is inconvenient.)

When the operation of this camera record section has been perfected, it is proposed to use it not only for the offset method of firing, but for regular target practices as well. The camera record section is the most important project the test section has yet to solve.

Wing Bridge Telegraphs for M1 Mine Planters. This Section has just completed a project testing two types of wing bridge engine order telegraphs. One model was an electric bridge telegraph installed on the USAMP *Maybach*. This telegraph was built by Pilot Marine Company for the *Maybach*. The other model was a mechanical telegraph similar to the telegraph installed in the pilothouse on the M1 mine planter. The additional wing bridge units were fabricated and installed on the USAMP *Spurgin* by Chief Warrant Officer (Chief Engineer) John B. May. In making this installation Chief Warrant Officer May revamped the entire telegraph system to reduce the friction caused by poor shaft alignment and improper cable leads. This telegraph installation works with less drag than the original installation which had two less telegraphs in the system. This latter telegraph was recommended for installation on all M1 mine planters.

Hatch Dog Guards for M1 Mine Planters. This Section has recommended the installation of hatch dog guards on all M1 mine planters. This modification will prevent the bending and breaking of hatch dogs now experienced. Approval of this modification has been given by higher authority and a work order should be distributed soon which will authorize the installation of the guards.

Coast Artillery Journal

Fifty-fifth Year of Publication

COLONEL W. I. BRADY, Editor
LT. COL. DONALD MAC GRAIN, Associate Editor
T/Sgt. Fred P. Presnell, Business Manager
Sgt. Beauford Z. Jones, Cir. Mgr.
S/Sgt. Bernice F. Carr, Bookkeeper
Pfc. Thos. G. Nuss, Order Dept. Clerk

The JOURNAL prints articles on subjects of professional and general interest to personnel of all the components of the Coast Artillery Corps in order to stimulate thought and provoke discussion. However, opinions expressed and conclusions drawn in articles are in no sense official. They do not reflect the opinions or conclusions of any official or branch of the War Department.

The JOURNAL does not carry paid advertising. The JOURNAL pays for original articles upon publication. Manuscripts should be addressed to the Editor. The JOURNAL is not responsible for manuscripts unaccompanied by return postage.

The United States Coast Artillery Association

OFFICERS

LIEUTENANT GENERAL LeROY LUTES
PRESIDENT

BRIG. GEN. AARON BRADSHAW, JR.
VICE-PRESIDENT

COLONEL W. I. BRADY
SECRETARY-TREASURER

ADDITIONAL MEMBERS OF THE EXECUTIVE COUNCIL

COLONEL JOE MOSS
COLONEL JOHN C. HENAGAN
COLONEL CHARLES M. BOYER
COLONEL HOBART HEWETT
COLONEL ANDREW P. SULLIVAN
COLONEL E. GRAHAM MARTIN

The purpose of the Association shall be to promote the efficiency of the Coast Artillery Corps by maintaining its standards and traditions, by disseminating professional knowledge, by inspiring greater effort towards the improvement of matériel and methods of training and by fostering mutual understanding, respect and coöperation among all arms, branches and components of the Regular Army, National Guard, Organized Reserves, and Reserve Officers' Training Corps.

News and Comment

This Issue's Cover

The history of the 200th CA (AA) is also a story of persecution and suffering. Since it appears in this issue which is published during the Easter Season, it is only fitting that the cover should show one of the churches where the men of the Regiment worshipped in their native state of New Mexico. It is the historic Church of San Felipe de Neri in Albuquerque built in 1706 at the time of the founding of that city.

Election of New Members to Executive Council

In the recent election of Executive Council members to replace those whose terms expired 31 December 1946, Lieutenant General LeR. Lutes was unanimously re-elected to the Association Presidency.

Colonel Charles M. Boyer was elected the Organized Reserve Corps representative on the Executive Council while Colonel John C. Henagan was elected the National Guard representative. Colonel Joe Moss was elected to the other existing vacancy.

The complete constituency of the Executive Council as it now stands may be found in the masthead on this page.

In addition to General Lutes, the members whose terms of office expired on 31 December are:

Brigadier General E. A. Stockton
Brigadier General E. A. Evans
Brigadier General R. E. Starr

To these officers we express the appreciation of the Corps for the services rendered during the tenure of their office.

To the Editor

I have your letter of 4 February 1947 relative to your request that Dr. Gorham and I prepare an article on the subject of radio tubes for the COAST ARTILLERY JOURNAL.

Dr. Gorham and I will be very happy to prepare such an article and it is believed we can meet your May 1st deadline. It may perhaps be wise to delay the decision as to whether the article should be run in one or two installments, since a number of illustrations will be provided which will undoubtedly have some bearing on the space requirements. On the matter of payment for the article, whatever your present policy on such matters is will be satisfactory.

I should like to add that it is believed particularly appropriate that such an article be placed in the COAST ARTILLERY JOURNAL since, as you know, it was Coast Artillery funds and projects which initially made possible the start of the Army radar program, including the first U.S. Army contracts for the development of special purpose tubes.

Dr. Gorham and I are looking forward to receiving the complimentary copies of the COAST ARTILLERY JOURNAL.

Very truly yours,
HAROLD A. ZAHL,
Asst. Director of Engineering,
Hq. Signal Corps Engineering Lab.

National Guard

Below listed by states and cities, are all the Coast Artillery Corps National Guard units which have been federally recognized since the last issue of the JOURNAL:

Alabama—Headquarters and Headquarters Battery, 104th AAA AW Battalion (SP), Florence.

Connecticut—Headquarters and Headquarters Battery, 211th AAA AW Battalion (SP), Milford; Battery A, 211th AAA AW Battalion (SP), Bridgeport; Headquarters and Headquarters Battery, 242d AAA Group, Bridgeport; Headquarters and Headquarters Battery and Medical Detachment, 283d AAA AW Battalion, Bridgeport.

District of Columbia—Headquarters and Headquarters Battery, 260th AAA Gun Battalion.

Florida—Headquarters and Headquarters Battery, 712th AAA Gun Battalion, Miami.

Illinois—Headquarters and Headquarters Battery, 693d AAA AW Battalion, Chicago.

Maine—Headquarters and Headquarters Battery, 240th AAA Group, South Portland; Headquarters and Headquarters Battery, 314th AAA AW Battalion (SM), Bangor; Battery A, 314th AAA AW Battalion (SM), Brower; Battery D, 314th AAA AW Battalion (SM), Millinocket.

Minnesota—Battery D, 257th AAA AW Battalion, White Bear; Medical Detachment, 598th AAA Gun Battalion, Duluth; Battery B, 598th AAA Gun Battalion, Duluth.

Pennsylvania—Battery B, 73d AAA Gun Battalion, Allentown; Battery D, 73d AAA Gun Battalion, Easton; Medical Detachment, 73d AAA Gun Battalion, Easton; Headquarters and Headquarters Battery, 337th AAA Searchlight Battalion, Reading; Headquarters and Headquarters Battery, 688th AAA AW Battalion (SP), Allentown; Battery D, 688th AAA AW Battalion (SP), Hamburg; Headquarters and Headquarters Battery, 689th AAA AW Battalion (SP), Pittsburgh; Battery C, 690th AAA AW Battalion (SP), Pottsville; Headquarters and Headquarters Battery, 707th AAA Gun Battalion, Philadelphia.

Rhode Island—Medical Detachment, 243d AAA AW Battalion (SM), Providence.

Virginia—Headquarters and Headquarters Battery, 691st AAA AW Battalion, Portsmouth.

Ground Forces To Train Helicopter Pilots

Plans for training of Army Ground Forces personnel to pilot and maintain the AGF's new Bell YR-13 Helicopters have been announced by General Jacob L. Devers, Army Ground Forces Commander.

Pilot students attend 30-day classes at the Bell Aircraft Corporation, Niagara Falls, New York, which began March 3, with a new class every two weeks through May 12. They must be rated Ground Forces liaison pilots, already qualified to fly standard light liaison planes. Reserve and National Guard officers on extended active duty as well as Regular Army officers are eligible for the training.

Bell Aircraft Corporation instructors are conducting Helicopter Mechanics' Schools inaugurated at Fort Bragg March 1 and scheduled at Fort Sill April 15 and May 15.

Officer Candidate School for Enlisted Men of Guard and Reserve

Plans now are being formulated by the War Department whereby, in the near future, enlisted men of the National Guard and the Organized Reserve may apply for attendance at the Army Officer Candidate School and qualify for commissions as second lieutenants.

Eligibility for attendance at OCS will be based upon the same requirements now in effect for enlisted personnel of the Army.

Enlisted men of the National Guard or Organized Reserve may apply, on their own initiative, to attend Army Officer Candidate School. Upon successful completion of the school, graduates will return to a civilian status and will be required to serve on inactive duty in a commissioned capacity with the National Guard or Organized Reserve. Those who desire to do so may apply for active duty in a commissioned status in the Army of the United States.

Graduates of the course may be commissioned in any of the Ground Arms or administrative and technical services. The school, now at Fort Benning, Georgia, will be moved to Fort Riley, Kansas, on or about September 1, 1947.

A new class is being started every three weeks making a total of eighteen classes per year. Each course runs for twenty-four weeks with a total of forty hours instruction per week. Present classes consist of 200 students and an effort is being made to raise this figure to 300 in the future in order to accommodate the enlisted men of the National Guard and Organized Reserves.

It was announced that when application forms are ready for distribution they will be placed with the National Guard and Reserve units in the field and made available to those who seek to apply.

Service Associations Convene

Under the sponsorship of the recently formed Coordinating Committee of Military Associations, which is headed by Colonel Ludlow King of the Chemical Corps Association, a conference of all civilian controlled military associations was held in Chicago during the latter part of January.

The purpose of the conference was to give firsthand information on army requirements from the top level of War Department to the key men of industry and to bring both together on a common meeting ground.

Representation at the convention totalled 1500 and was composed of leading industrialists and members of the following associations:

Chemical Corps Association
Army Ordnance Association
Air Force Association
Army Signal Association
Army Transportation Association
The Quartermaster Association
Society of American Military Engineers
Association of Military Surgeons of the United States

Generals Eisenhower, Devers, Lutes, Collins, Aurand, and Paul addressed the conference as did some of the outstanding civilian leaders in the field of industry.

The conference was such a marked success that it is planned to make it an annual affair.

The Honorary First Defenders

The picture above was taken at the annual meeting of the Honorary First Defenders of Allentown, Pennsylvania.

This unique organization's sole object is to render support to the City's National Guard Units. Formed in 1938, at the suggestion of Brigadier General (then Colonel) Charles C. Curtis, it adopted its name from the motto of the old 213th C.A. (AA) "The First Defenders," which was then commanded by General Curtis.

Membership in the Honorary First Defenders entails no obligation other than to exhibit interest in the local citizen-soldiery. Its roster includes many former officers and members of the local Units, as well as veterans of the Army, Navy, and Marine Corps. No active member of the local National Guard is permitted to be an active member of the organization. Professional men, businessmen and men from all walks of life are welded into a working organization that has no counterpart in the country.

The influence of the Honorary First Defenders is making itself felt in assisting the local commanders in securing a high type of personnel, in aiding Guardsmen in their employer relationship, in making the public aware of the traditions, and in awaking community pride in the value and efficiency of their local Guard Units.

In an effort to influence and interest other communities in this type of organization, the National Guard Bureau invited Mr. B. Wilson Lyte, Adjutant of the Honorary First Defenders, to address the recent conference of all National Guard Public Relations Officers in Washington.

"One of our most practical activities in assisting the reorganization of the National Guard," he said, "is our liaison committee which is working with industry and employers in an effort to grant National Guard employees a vacation with pay in addition to their military leave and pay them the difference between their military pay and regular pay while at camp.

"Of the 33 firms we plan to contact, 18 have already agreed to the proposition. This work has been most important in encouraging enlistments."

Mr. Lyte's address was very well received by the conferees and it is hoped that similar organizations will be activated throughout the country as a result of it.

ORC Units Activated

The following is a complete list of Organized Reserve Corps Coast Artillery Corps units reported activated by the various Armies. It does not include those units authorized for activation but not yet reported active by the Armies. The location is shown after each unit:

SEACOAST ARTILLERY

Headquarters and Headquarters Batteries, Harbor Defenses

304th—Portland, Oregon
306th—Baltimore, Maryland
307th—Norfolk, Virginia
312th—Newport News, Virginia
313th—First US Army, New York
315th—Brooklyn, New York
316th—Hemstead, New York
317th—Boston, Massachusetts
318th—Providence, Rhode Island
319th—San Francisco, California
320th—Seattle, Washington
328th—East Orange, New Jersey
332d—Portland, Oregon

Gun Batteries, Harbor Defenses

803d—San Diego, California
805th—First Army, Georgetown, Delaware
853d—Mansfield, Pennsylvania
878th—Portsmouth, Virginia
879th—Hampton, Virginia

Coast Artillery Batteries, 155mm Gun

807th—Wilmington, Delaware
830th—Mobile, Alabama
854th—Wilmington, Delaware
855th—Charleston, South Carolina
856th—Savannah, Georgia
876th—Portland, Oregon
881st—Virginia Beach, Virginia

Coast Artillery Searchlight Batteries

802d—San Diego, California
806th—First Army, Wilmington, Delaware
852d—Portland, Oregon

ANTIAIRCRAFT ARTILLERY

Headquarters and Headquarters Batteries, Brigades

74th—Chicago, Illinois
113th—Cincinnati, Ohio
305th—New York, New York
341st—Seattle, Washington

Operations Detachment

168th—Chicago, Illinois

Automatic Weapons Battalions

321st—Tuscaloosa, Alabama
322d—(SP), Seattle, Washington
323d—Billings, Montana
376th—Charleston, South Carolina
377th—Pittsburgh, Pennsylvania
378th—Wilmington, North Carolina
379th—Minneapolis, Minnesota
382d—Oakland, California
383d—(SP) Chicago, Illinois
385th—(SP) Detroit, Michigan
386th—(SP) Detroit, Michigan
387th—Wilmington, Delaware
389th—Waco, Texas
399th—(SP) Cleveland, Ohio
466th—Richmond, Virginia
523d—Butler, Pennsylvania
535th—Indianapolis, Indiana

Airborne Antiaircraft Units

492d—Airborne AAA Battalion (100th Airborne Division), Louisville, Kentucky
651st—Airborne AAA Battalion, Jacksonville, Florida

Amendment of Association Constitution

All the proposed amendments to the Association Constitution were confirmed in the recent voting.

As outlined in the November-December issue these amendments effect the following changes in the constitution:

1. All enlisted men or former enlisted men of the Coast Artillery Corps of the Army of the United States may be eligible for active instead of associate memberships.
2. All members of the Executive Council must be members of the Coast Artillery Corps instead of just active members of the Association.
3. At least five of the elective members of the Executive Council shall be personnel residing in Washington, D. C. or vicinity with a minimum of three on active duty. Heretofore it was only required that five of the elective officers be Coast Artillery officers on active duty.

Joint Guided Missiles Planning Board

Under the chairmanship of Dr. Frederick Hovede, President of Purdue University, a Joint Research and Development Board Committee is planning the nation's research and development programs on guided missiles.

Composed of both civilian and military scientific leaders, the committee is responsible for the progressive study, evaluation, improvement and allocation of research and development programs on guided missiles as applied to the national defense effort and to the available and projected sources of scientific information personnel and facilities as a basis for the constitution of an integrated program in this field.

The four Army and Navy groups which are primarily concerned with the guided missiles program have the following high-ranking officers on the committee: Vice Admiral A. W. Radford, Deputy Chief of Naval Operations for Air; Vice Admiral G. F. Hussey, Jr., Chief of Navy's Bureau of Ordnance; Brigadier General A. R. Crawford, Army Air Forces; and Brigadier General H. B. Sayler of Army Ordnance.

Other civilian members of the board besides Dr. Hovede, include Dr. E. R. Gilliland of M.I.T. and Dr. H. L. Dryden of the National Bureau of Standards.

Visitors to Presidio Inspect Fort Point

When the Sixth Army observed the 100th anniversary of the U. S. Army's occupation of the Presidio of San Francisco on March 11, the general public had its first opportunity in many years to explore old Fort Point, San Francisco's major harbor defense up to half a century ago.

During the Centennial Day observance, visitors to the Presidio were escorted by Army guides through the massive fortress resting on the bedrock which also supports the southern anchor of the Golden Gate Bridge towering directly above.

Spray from the Golden Gate pounds the sixteen-foot sea wall and dashes against the base of the obsolete bastion atop the terrace which extends from the water's edge back several hundred feet to the high bluffs of the Presidio.

Designed as a harbor defense for an era of full-riggers, Fort Point was declared obsolete in 1905, the year when construction was begun on Fort Winfield Scott in the hills above and now the home of the Seacoast Branch of the Army Ground Forces' Artillery School.

The Fort Point batteries finally were abandoned in 1914 and since then the massive structure has been empty and all but forgotten save for occasional visiting classes from the Seacoast Artillery School.

A white cliff one hundred feet high rose on the site of Fort Point in 1776 when the Spaniards arrived and set up an outpost on the Presidio. On the top of the cliff they mounted a three-pound cannon to remind all mariners that they could enter the bay only by the grace of His Majesty, Carlos III of Spain.

Lest it jump off the cliff when fired and plump into the dark waters 100 feet below, the cannon was chained to a log. In 1793 an anxious governor of Alta California ordered construction of proper fortifications at the harbor entrance. The action was prompted by a plaintive letter from the Presidio's commandant which said:

"I could not salute the barkentine Chatham, having no cannon." The three-pounder had burst into ten pieces a few months before while firing a salute to a saint.

Thus came into being the new Spanish fort, El Castillo de San Joaquin. Twelve embrasures pierced its heavy adobe walls. From these protruded cannon which had been cast a century before in Lima, Peru. Four of the cannon now decorate the Presidio grounds.

The Spanish fort survived storms and fog and official neglect of absentee Spanish rule for half a century. Then, during the "Bear" revolt, a small patrol, led by John C. Fremont and Kit Carson, crossed the bay from Sausalito, scaled the fort's dusty walls and spiked its guns. The only resistance they met was from the wind screaming across the "Cantil Blanco"—White Cliff.

Soon after California joined the Union, the War Department decided San Francisco needed a more substantial fort than the old Spanish adobe. The design of Fort Sumter was adapted to the Golden Gate location and construction was begun. But first the white cliff was cut down to its present size to a foundation of solid rock.

A rough quadrangle some 250 feet long and 150 feet wide, the fort rose in four tiers surrounding an inner courtyard. Its walls were four feet thick, of brick, masonry and granite. Bastioned by three spiral staircase towers, and protected from the breakers by the massive sea wall, it embodied the most advanced principles of military construction.

The fort was built to withstand long sieges. Iron pipes built in the masonry carried rain water from the roof through the walls to cisterns carved in the solid rock beneath the courtyard. Pumps were installed to raise the water to any level desired.

Its storerooms could hold 120 days' rations for 600 men. Stables, smithies and wheelwright shops were located on the ground tier. Ammunition magazines were tunneled into the massive base. Shot furnaces also were installed, but these have long since disappeared. Only the winches for hoisting the shot to the upper tiers remain.

Quarters for officers with families and troops barracks were located on the land side of the second and third tiers.

Delays due to the distance California was from official Washington, divided loyalties of workmen in the pre-civil war days, and severe storms which tore out roads and bulkheads finally were overcome and the fort was completed in 1861.

Two companies of the Third Artillery were assigned to garrison it, and 149 guns were mounted in the four tiers, including 8-inch Columbiads, 42-, 32-, and 24-pounders.

More armament was added in later years—ten-inch breech-loading rifles on disappearing carriages, mortars and dynamite guns—making the fort the most formidable unit of Pacific coast defense in its day.

During the Spanish-American War, Fort Point was garrisoned by two batteries of artillerymen and three companies of the 8th California Volunteers. It remained in a state of readiness but no Spaniards came near it. In fact, the fort was never called upon to fire a single hostile round. Grim, forbidding and formidable, it served its purpose simply by being there, a silent sentinel of the Golden Gate.

Our Oldest Subscriber

With the current renewal of his subscription, Major General William H. Wilson begins his forty-sixth year of consecutive subscription to the JOURNAL.

We believe that this record of loyalty and interest is unsurpassed in the annals of service journals.

We are pleased to note also that General Wilson has recovered from a recent illness and we know that many join us in sending our best regards and wishes for future good health.

Unit History

The following unit history has been received at the JOURNAL office since publication of the January-February issue:

536th AAA AW Battalion

Copies of this history may be purchased from the Army and Navy Pictorial Publishers, P.O. Box No. 950, Baton Rouge, La.

Other units which have published histories or contemplate doing so, are urged to send copies to the JOURNAL for our permanent file, which will be used as a readily accessible source of CAC history.

New System for Recovering V-2 Recording Instruments

In recent firing of V-2s, a new system was used to recover instruments. A series of two ribbon parachutes has been developed to recover instruments and cameras from the apex of the rocket's trajectory at an altitude of 500,000 feet. The first 'chute opens immediately after a container carrying the instruments is ejected from the rocket by a "mortar" charge. This 'chute decelerates and pilots the container until an altitude of about 150,000 feet is reached, when a larger ribbon parachute opens, permitting the container to drift to earth at a rate of descent slower than a man using a standard parachute.

The first V-2 missile carrying AAF instrumentation, misfired and crashed last August without penetrating the upper air regions. The second attempt in November was successful and much valuable information was obtained.

In the past, scientific data from the ionosphere was returned to the earth by a telemetering device. By this method, a ground radio receiver recorded the changes of pressure, temperature and density through the use of an oscilloscope on the ground which reproduced the pulses from a transmitter in the rocket.

This method permits the recovery of delicate recording instruments which are more accurate than telemetering devices.

Previous flights resulted in several important scientific findings. In fact, an AAF guided missile expert recently stated that the data obtained from the V-2 firings had advanced science of upper air 20 years.

The scientific research being conducted includes studies of the temperatures and pressures of the upper air regions, the composition of the atmosphere and radioactive contamination, the ionic properties of the atmosphere, meteoric matter and solar radiation.

Research also will continue in the firing of guided missiles, including a trajectory analysis, supersonic flight characteristics, flight control, firing techniques, high altitude photography and testing of the new parachute recovery system.

✓ ✓ ✓

To the Editor

I am serving with the Fifth Air Force in Japan as Antiaircraft Officer and have noticed an increasing interest on the part of the Air Corps officers in the COAST ARTILLERY JOURNAL, especially those articles dealing with radar, guided missiles, and Air Corps tactics. I have been asked frequently by various officers for my copies of the JOURNAL.

Recently I was asked if some of the articles on radar could be reproduced for our Aircraft Control Warning Squadrons. Specifically, we request permission to reproduce the radar articles written by Lt. Col. Leonard M. Orman as we believe they will be an important aid in our intensive training program.

As for myself, I find the JOURNAL invaluable as it keeps me posted on the latest information about the Coast Artillery and the whereabouts of my friends in the Coast Artillery. It is very helpful to me in my present assignment.

Wishing you continued success, I remain,

Sincerely yours,

JOHN Y. BRIGHTMAN,
Major, CAC.

Atomic-Rocket Defense for U. S. A.*

Mr. C. P. Lent, Editor of *Rocket-Jet Flying*, was present at a recent meeting of the American Rocket Society where prevention measures were discussed against possible attacks on New York City by rockets with atomic warheads. It was suggested that counter rockets might be sent up which will seek out the enemy missiles to destroy them. Preliminary to sending up the counter rockets, radar will be used to locate the enemy. The question was raised as to the chances of getting a bull's-eye on the missile approaching at 3000 miles per hour and a suggestion was made to equip the counter rocket with a proximity fuse. All this seemed very speculative considering the limitation of efficiency of present radar equipment and the small chance of locating and destroying the enemy rocket approaching the coast of U.S.A. thousands of miles away. Mr. Lent holds the view that prevention must first begin in the air to dwarf enemy attacks. He made a suggestion that a string of stratosphere planes equipped with rocket motors should keep vigilance of the air at all times. The planes will take off from bases in the Caribbean, Newfoundland, Greenland and Iceland, fly in formations spaced 200 to 300 miles apart and in arcs of 800 miles from each other. They should be equipped with powerful radar instruments which will be constantly in operation. Should any flying object be discovered by radar, instantly signals will be sent to the nearest anti-atomic stations located on near-by islands and the mainland to discharge salvos of counter rockets. The gist of this plan is that enemy missiles can be located long before they will near the coast. They might be even attacked and destroyed by counter rockets carried under the bellies of the patrolling aircraft and destroyed at source.

*Reprinted, courtesy of *Rocket-Jet Flying*.

✓ ✓ ✓

Atom-Proofing "Unopolis" Capital of U. N.*

By Constantin Paul Lent

Atom-proofing cities against rockets carrying atomic warheads makes an interesting subject of discussion. Here is a suggestion for atom-proofing UNOPOLIS, the capital of the United Nations Organization. The buildings will be large but will only rise three stories above ground. Five or more stories will be located in a deep moat surrounding the whole structure. The walls of the moat will be several feet thick and the outside of the building will be covered with a thick layer of fireproof bricks for insulation against atomic heat waves. All doors and windows will be equipped with fireproof brick window screens that can be lowered automatically in case of emergency. The basements of the buildings will be several stories deep and the roofs will be reinforced with a thick concrete layer curved to reflect shock waves. Besides the suggestion for atom-proofing the capital of the United Nations, it is believed that this is the first time that an appropriate name has been advanced for its capital city. The word UNOPOLIS is made from a combination of the word UNO, and the Greek word POLIS, meaning a town.

*Reprinted, courtesy of *Rocket-Jet Flying*.

Coast Artillery Newsletters

ANTIAIRCRAFT SECTION, GHQ, FEC, TOKYO, JAPAN, APO 500
BRIGADIER GENERAL WILLIAM F. MARQUAT, *Antiaircraft Officer*

In line with the War Department "controlled career" policy, recommendations for assignment of 68 CAC second lieutenants, graduated from the United States Military Academy in June 1946, were made to the War Department in February. To become effective in June 1947, present plans contemplate that these new officers will be assigned to a firing battery during their first year and to a different duty for their remaining tour in the Far East Command.

The following CAC officers have been released by the Peiping Headquarters Group, Peiping, China, and will be either returned to the ZI or reassigned within the Far East Command: Colonel Philip F. Biehl; Colonel Frederick B. Dodge; Colonel William F. La Frenz; Lieutenant Colonel Victor L. Glines; Major James L. Butler; First Lieutenant William F. Millard.

A new Standing Operating Procedure for Air Defense, necessitated by the organization of the Far East Command, has been prepared recently by General Headquarters. Incorporating instructions pertaining to all air defense elements of air, ground, and naval forces, the document is a big step toward assuring a coordinated, smoothly operating air defense establishment within the Far East Command.

Antiaircraft Artillery Technical Instruction Teams, now undergoing a course of instruction at the AA and Guided Missile Branch of the Artillery School, Fort Bliss, Texas, are expected to arrive in the Command beginning in April. Original plans for assignment of the teams have been revised somewhat, in accordance with the new command structure. The lack of experienced officers has been keenly felt and arrival of the teams will be a welcome event.

Initial plans for the institution of status of equipment reports, for all antiaircraft units and maintenance detachments under their control, have been completed. These reports will include major items only, status of modification work orders, and ammunition on hand. Such information, coupled with combat effectiveness reports, will provide a ready record of the over-all efficiency of all antiaircraft artillery units in the Far East Command.

865TH AAA AUTO WPNS BATTALION (SP) KOREA, APO 712

LIEUTENANT COLONEL GEORGE A. BALDRY, *Commanding*

The 865th is just getting over its "new" feeling and is settling down to routine training. This past period has been a fairly difficult one since the organization strength had to be cut down to meet the new T/O & E requirements in addition to the weeding out of inapt individuals under AR-615-368 and 615-369.

Approximately one-half of the combat vehicles were received from the Ordnance Depot after a complete overhaul and work was immediately begun to mold individuals into experienced half-track crews. Gunners' instruction, service of the piece, maintenance, and aircraft recognition are being stressed. Battery hikes ranging from 8-12 miles are being held weekly.

Battalion schools organized and operated during the period include a communications school designed for battery communications sections, and a motor school stressing first and second echelon maintenance. A first aid and sanitation course is being conducted by the surgeon for the benefit of the medical detachment and two aid men per battery. An officers' school operating one night each week under the

direction of Lieutenant William W. Weaver is conducting a general review of the maintenance and operation of the Caliber .50 machine gun.

Since recreation opportunities are limited in this area, every effort has been made to promote athletics and entertainment of all kinds. Hunting parties are most popular and go out several times a week—pheasant, duck and dove are plentiful. Three basketball teams have been organized and are making a good showing in the XXIV Corps league in spite of a late start. Movies are shown every night in the battalion area and a variety show is in production. We are fortunate in having three types of orchestras: The Homesick Hawaiians, The Kentucky Mountaineers, and The Rhythm Rascals. All are very popular both in the battalion and in the Seoul Area.

Area improvement and construction have moved slowly during the cold weather but by 1 April 1947 we expect all building to be complete.

OKINAWA, APO 331

LIEUTENANT COLONEL F. T. BERG, *Commanding*

The outstanding event concerning the Antiaircraft Artillery on Okinawa since V J day occurred during the month of December 1946. In that month an entire group of Philippine Scouts arrived from the Philippine Islands to join the permanent garrison here on Okinawa. They will replace the former antiaircraft artillery garrison units.

Among the personnel of the above units are the following officers and enlisted men who served as Philippine Scouts at Corregidor before World War II:

Second Lieutenant Dominador Carballo, 13 years with Btry "H," 92d CAC (PS); Second Lieutenant Jose A. Torres, 9 months with Btry "C," 92d CAC (PS); Second Lieutenant Benjamin P. Paras, 7 years with 92d CA (PS); Second Lieutenant Pedro Nigalin, 11 years with 91st CA (PS); Second Lieutenant Cristobal Seva, 9 years with 92d CA (PS); Second Lieutenant Meliton U. Tampico, 6 years with 91st CA (PS); Second Lieutenant Juan N. Veracruz, 23 years with 91st CA (PS); Staff Sergeant Mark P. Mocorro, 8 years with 91st CA (PS); Corporal Mitchell Canonigo, 8 years with 92d CA (PS); Corporal Peter R. Crisostomo, 4 years with 91st CA (PS).

Lieutenant Colonel F. T. Berg assumed command of the 87th AAA Group (PS) upon its activation. Shortly after the first of the year, the following officers were transferred to the 87th AAA Group (PS) and assumed duties as indicated: Lieutenant Colonel Iver A. Peterson, Executive Officer; Major Willard W. Mize, S-1; Major Paul B. Wolff, S-2; Major Hugh J. Turner, Jr., S-3; Major James G. Healy, S-4.

Major Roland E. Falls and Major Charles R. Rockwell departed for the ZI for release from active duty. Lieutenant Colonel Roland W. Estey has received similar orders and will sail in the near future.

The Group continues its program of maintenance and improvement of the AWASE Housing Area and is constructing a compound for Filipino women within the AAA area. Two officers, one warrant officer and 87 Scouts will comprise the detachment for operating the AWASE Housing Area.

Major General George F. Moore, Commanding General AFWESPAC, accompanied by Brigadier General Fredrick L. Hayden, Commanding General, RYKOM, inspected the AAA area on 11 December 1946, and visited all unit areas. General Moore stopped to talk to several officers and men who were members of the old Scout units that defended Corregidor under his command and whom he hadn't seen since those trying days.

Specific hours were allocated to the units for revamping and repairing their areas and facilities which had deteriorated during the interim period. The initial training mission for the Philippine Scout troops consisted of review of basic subjects, continued stress on military discipline and unit sanitation. Preparations were made for the initiation of intensive training with a view toward early firing on the range. Specialist schools were established for heavy equipment operators, refrigerator maintenance, plumbers, electricians, welders and buglers. Officers' schools for review of basic electricity and mathematics are being conducted in the Gun Battalion.

The Scouts assumed all interior guard duty immediately upon their arrival and they are gradually relieving native labor in the overhead and utility installations within the AAA areas. Even so, there are over 450 natives on the Group payroll, the majority being employed at the AWASE Housing Area.

138th AAA Group, Yokohama, Japan, APO 503

Colonel D. C. Tredennick, *Commanding*

The officers and men of the 138th AAA Group join in extending a hearty welcome to Colonel Donald C. Tredennick who assumed command of the group on 27 January 47 following the departure of Colonel Charles A. French for state-side duty. Colonel Tredennick arrived from Hawaii on 9 November 46 and was followed shortly thereafter by Mrs. Tredennick and the children.

The unit training program, held in abeyance during the Christmas holidays, was resumed early in January. As security guard continues to be the primary mission of the Group, training is, of necessity, conducted on a reduced scale. The Group is sending batteries from each battalion to the MITO firing point on a rotational basis.

On the afternoon of 12 December 1946, the officers and men of the 209th AAA AW Battalion (SP) held a parade in honor of the late Colonel Oscar D. McNeely. The Commanding Officer, 138th AAA Group, reviewed the troops and dedicated their camp, naming it Camp McNeely.

Colonel McNeely served in the Southwest Pacific area and was killed while on an aerial inspection of the advanced Antiaircraft Artillery echelons in his sector. The dedication ceremony was held at the entrance of the camp, where the group commander officially announced its opening. Colonel McNeely will be remembered in antiaircraft artillery circles as inventor of the McNeely Trainer.

Entrance to Camp McNeely, named in honor of the late Colonel Oscar D. McNeely.

The 209th is fortunate in having a quonset hut designated for a chapel. It is painted white except for the gilded cross on top of the steel steeple. A glassed-in partition makes an attractive entrance and provides a vestibule for the chapel.

A battalion parade was held Thursday, 9 January 1947, at the 209th AAA AW Battalion (SP) in honor of Private Gilbert B. Meeks, 3878747, Headquarters Battery. Private Meeks was commended by Lieutenant General R. L. Eichelberger, Commanding General, Eighth Army on 27 November 1946. The following excerpt is from the Letter of Appreciation to Private Meeks "—your prompt action in catching and holding the Japanese laborer when he started to run, so that the flames on him could be extinguished, was marked by poised, intelligent performance in the face of a serious situation—."

Progress is being made by the 933d AAA AW Battalion (SM), located in Tsurumiku, Yokohama, in the construction of the new area. Barracks have been completed and a few more days will find the officers quarters ready, at which time, the Battalion will move as a unit into the new area. "A" Battery spent several weeks at the MITO firing point and reported excellent results in their target practice. In athletics, the Battalion finished in the lead and became the group basketball champions. The 753d ended up in second place and the 209th finished third.

The 753d AAA Gun Battalion, located at the Tomioka Sea Plane Base, has been awaiting the advent of Spring and clear skies in order to begin firing, the first for the majority of men now assigned. The Battalion has had two batteries in training since November 1946, and is confident that a high degree of firing efficiency will be achieved. A new mess hall and a new club for enlisted men are nearing completion and should be in operation within a fortnight.

Johnson Field, home of the 162d AAA Operations Detachment and the 538th AAA Searchlight Battery, continued to be the garden spot of this group. It has been said that personnel wishing to rest and recuperate from the rigors of occupation duty choose Johnson Field rather than go to the various hotels provided for that purpose. The 162d operates an AAOR in conjunction with the Air Force's Combat Operations Room. The 538th AAA Searchlight Battery is furnishing homing beacons for Johnson Army Air Base and will soon extend this service to Yokota Army Air Base. Training is being conducted on radars and searchlights installed in tactical positions.

During the months of December and January the families of twenty-one enlisted men and officers arrived in Japan and were happily greeted. This swelled the total for the group to twenty-four families, all of whom are comfortably housed in and about the Yokohama area.

The following officers have reported for duty with the Group and its attached units since submission of the last newsletter: Lieutenant Colonel Arthur L. Fuller, Jr.; Lieutenant Colonel Richard L. Morgan; Major Gerald R. Underwood; Captain Leroy W. Hutchins; Captain Murry T. Oakley; Captain Hart S. Odom; Captain Charles F. Pettin; Lieutenant Tenbroeck W. Baldwin; Lieutenant Carl L. Rice; Lieutenant Edward J. Skaggs; Lieutenant Donald B. Smith.

32d AAA Brigade, Luzon, P.I., APO 707

Brigadier General Frank C. McConnell, *Commanding*

31 December 1946 was significant not because it saw the passing of another year, but because on that day was born the infant of all Antiaircraft Artillery organizations in the Philippines. Headquarters and Headquarters Battery, 32d AAA Brigade (PS), was activated on that date pursuant to authority contained in Section II, General Orders No. 269, Headquarters AFWESPAC, dated 26 December 1946. The new Brigade, commanded by Lieutenant Colonel Laurance H. Brownlee, CAC, is stationed at Camp Camarilla, Manila, with Headquarters, Philippine Ground Force Command and the 32d AAA Brigade. It is attached to the 32d AAA Brigade.

Quotas for enlisted men for TDY at Camp John Hay, Baguio, P. I., are being received monthly, and the men are constantly leaving and returning. Though the camp was badly damaged as a result of the heavy fighting that took place in and around Baguio, it is being rapidly restored and now offers the most modern facilities and conveniencies for those who are fortunate enough to visit this scenically beautiful "Playground of the Orient." Here everything is done to make the individual's stay pleasant and to help him forget army routine. There are no uniform regulations at the camp; the food is excellent; athletic facilities are many and varied, including tennis, bowling, bicycling, horseback riding, ping-pong, pool, and most popular of all—golf. The restored 18-hole course is considered one of the sportiest in the Pacific. Then there is the Scout Barrio at the camp where one may watch the Igorot women weaving their famous luncheon sets, the woodcarvers, and the silversmiths. In addition to all this, the Red Cross operates conducted tours to the city of Baguio and to other places of interest in the vicinity. In talking to General McConnell, this writer learned that the General and Mrs. McConnell had been at Camp John Hay 20 years ago and though the camp has undergone many changes, they found on their recent visit that it was all that they had remembered it to be and more.

With the departure of Pfc. Raymond Chin for Paranaque Replacement and Disposition Command to await further orders for return to the United States, Headquarters Battery said "goodbye" to the last remaining enlisted man who had been with the organization on Leyte.

Playing five games in sixteen days against the strongest teams in the league, the football team from Camp Camarilla went into the final game against a strong AFWESPAC I & E Detachment team with a perfect record. However, the schedule proved to be too strenuous for them and they lost the game and with it the "Sweat Bowl" football league championship and the right to represent the Philippines against Hawaii in the "Bamboo Bowl" game which was played in Rizal Stadium on New Year's Day.

17 January saw the formal opening of the new Camp Camarilla Enlisted Men's Club. In a brief ceremony preceding the evening's festivities, General McConnell expressed his complete satisfaction with the club and commended those who were responsible for formulating the plans for it and seeing it through to completion. Concluding his address, he turned the club over to the enlisted men through their President. The men of the Battery can be justly proud of this club for it was largely through their efforts that it was completed.

42d AAA Brigade (PS), Manila, P. I., APO 707

Lt. Colonel Laurance H. Brownlee, *Commanding*

As stated in the newsletter from the 32d AAA Brigade to which it is attached the 42d AAA Brigade was activated on December 1946 with an actual assigned strength of two American officers and sixty-six enlisted men of the Philippine Scouts.

Lieutenant Colonel Laurance H. Brownlee, CAC, commands the Brigade, and First Lieutenant Woodson A. Sadler, FA, commands Headquarters Battery with additional duties as Brigade S-1. The Brigade is now stationed at Camp Camarilla, Luzon, P. I.

Upon its activation, the enlisted personnel were selected from Headquarters Company of the recently inactivated 4th Replacement Depot (PS), at Alabang, Rizal, P. I.

The battery personnel have been busy constructing a Headquarters Battery Mess Hall and other installations.

The first phase of training of the Brigade consists of a three weeks basic refresher course covering subjects recommended by a board of inspectors as per instructions from the Commanding General, Philippine Ground Force Command.

One enlisted man was placed on detached service to attend meat and dairy inspection courses and two enlisted men were placed on detached service with AAATC, San Marcelino, Zambales, P. I., to attend Radar School for an indefinite period.

Recreation facilities have been very satisfactory. There have been trips to Corregidor Island sponsored by the I & E Section, Philippine Ground Force Command. Movies are shown every other night and USO shows weekly. The enlisted men's club recently opened and a dance will be held every other Friday evening.

ANTIAIRCRAFT SECTION, HEADQUARTERS EIGHTH ARMY, YOKOHAMA, JAPAN, APO 343

COLONEL M. A. HATCH, *Antiaircraft Officer*

The training cycle for Eighth Army troops consists of three phases. Antiaircraft artillery units are completing the first phase which is the training of individuals in basic military subjects and in the duties of assigned MOS in antiaircraft artillery. The antiaircraft section has compiled a series of twenty individual and team tests in AAA subjects. These tests are to be given in conjunction with seventeen tests in basic subjects on completion of the first phase of training.

The second phase involving unit training is to be followed immediately by the third phase consisting of combined and joint training. The current Army Ground Force tests slightly modified for the special organization of sum units will be given on completion of the third phase.

Special tests have been transmitted to the 11th Airborn Division for use with its organic 152d Airborne AAA Ba talion.

Major Carl O. Loos, Supply Officer for the Section, com pleted a six months tour of duty as S-4 of the 138th AA Group during the period of setting that section up as a accountable office for all property held by Group units.

Sergeant William F. Brown, Chief Clerk of the Ant aircraft Section, was selected as one of the outstandin soldiers from Headquarters Company, Eighth Army, to b a member of the Honor Guard which accompanied Lie tenant General Robert L. Eichelberger on the occasion his receipt of the Navy Distinguished Service Medal.

The Seacoast Branch, The Artillery School

MAJOR GENERAL ROBERT T. FREDERICK, *Officer In Charge*

The following changes occurred during the month of January 1947:

ARRIVALS

Name	*Department*
Lt. Col. Joseph De Rita	Executive Officer, Sch Trps, Hq & Hq Det, Sc Br TAS
Capt. Thomas A. Duke, Jr.	Writer, Dept of Sub-Mines, Mine Det, Sc Br TAS
Capt. James A. Durkin	Writer, Academic Section, Hq & Hq Dt, Sc Br TAS
Capt. Paul A. Morton	Student, Diesel Motors Course No. 1, Hq & Hq Det, Sc Br TAS
Capt. Salvatore J. Verga	Executive Officer, Mine Det, Sc Br TAS
1st Lt. Arthur C. Brooks, Jr.	Gunnery Instructor, Dept G T, Mine Det, Sc Br TAS

DEPARTURES

Name	*Destination*
Col. Parmer W. Edwards	Trfd to The Artillery Scho Fort Sill, Oklahoma
Col. William A. Hampton	Trfd to Student Detachmen Armed Forces Staff Colleg Norfolk, Va.
Capt. James W. Newman	Trfd to O/S Repl Depot
1st Lt. Harold B. Anderson	Trfd to O/S Repl Depot
1st Lt. Glenn C. Clover	Trfd to O/S Repl Depot
1st Lt. Philip W. Groetzinger	Separated from service
WOJG Louis M. Sieber	Trfd to CAMP Det, USAM Niles, Presidio of San Fr cisco, Calif.

The following changes occurred during the month February 1947:

ARRIVALS

Name	*Department*
Maj. Leslie O. Doane	Instructor, Radar, Hq & Det, SC Br TAS
1st Lt. Robert S. Willard	Executive Officer, of the Hq Hq Det, SC Br TAS

DEPARTURES

Name	*Destination*
Col. Herbert H. Blackwell	Trfd to AGO Casuals, Wa ington, D. C.
1st Lt. Harold R. Hill	Trfd to O/S Repl Depot
CWO Albert Fejer	Trfd to 2d Inf Div, Fort Le Washington
CWO John S. Peyton	Trfd to O/S Repl Depot

Hawaiian Artillery Command

COL. H. B. HOLMES, JR., *Commanding*

In an attempt to find a suitable method for preparing Seacoast Artillery Weapons for long-term storage, an experiment is being conducted within the Hawaiian Artillery Command using the navy's plastic strippable film method of preservation. The strippable film method has been found satisfactory for mobile artillery or artillery matériel which has been removed from its emplacement, but its suitability for use on weapons left in place is not definitely known.

A 6" M1903 A2 battery on barbette carriage M1 was selected for the experiment. One of the two guns was prepared using the plastic film method of preservation. The weapon was cleaned thoroughly, exercised, and examined for mechanical defects, after which it was prepared using standard rust preventatives. Then a canvas cloth hood was placed over the entire gun and carriage, sprayed with six coats of plastic film, and securely sealed to the concrete emplacement with tar. Three hundred seventy-five (375) pounds of desiccant and a set of instruments consisting of a thermometer and hygrometer were placed inside the plastic hood and made visible from the exterior by means of a window in the hood.

The other gun was prepared using standard preservative methods and materials as prescribed in TM 4-245, and another set of instruments were placed within the shield to secure data for comparison with the strippable film method.

The experiment is to be of approximately one year's duration, and the approximate cost of the entire project was $1600, including labor and materials. If successful, this appears to be a very economical method of preserving a weapon valued at $160,746. Results of the experiment will be published upon completion.

Physical training, in compliance with WD TC No. 7, 1946, is being conducted with the objective of raising the standard of physical fitness to excellent in all units. In conjunction with this training, athletics are being emphasized with an intra-command basketball tournament having been just completed and a volleyball tournament having just begun.

Experimental strippable film preservative coating on gun at Battery French, Oahu.

Hawaiian Antiaircraft Artillery Command

COLONEL WILLIAM L. MCPHERSON, *Commanding*

There has been a considerable change in officer personnel, mostly in departures rather than arrivals. Actually, none of the long awaited replacements have been received and a large number of our officers have left or are leaving. It has been found that the present policy of having men in the army for a comparatively short time makes it difficult to train them adequately in the numerous technical jobs included in an antiaircraft organization.

Elements of the command have been participating to a rather limited extent in Joint Army-Navy exercises which have been conducted a number of times during the past few months. It is anticipated that more units soon will attain a sufficiently high state of training to permit their participation in future exercises of this type, and especially in the Pacific Maneuvers which are scheduled to take place in the near future. A highly desirable result of these Joint Army-Navy Exercises has been the ever increasing cooperation among the Ground Forces, the Air Forces, and the Navy.

The 88th AAA Searchlight Battery has been activated and added to the Command. This unit is stationed at Schofield Barracks and was organized from colored troops transferred from the Army Personnel Center and other units on Oahu. It is busily engaged in completing its organization and in training specialists to handle the numerous technical jobs of a searchlight battery. Also during this period, three batteries of the 867th AAA Automatic Weapons Battalion have returned from the Seacoast Artillery Command where they were assisting in the caretaking of seacoast armament on the Island. Lieutenant Colonel Light, new Commanding Officer of the battalion, has been conducting an intensive training program, centralizing his comparatively few trained men into instruction teams for the training of personnel to fill the specialist jobs in his battalion.

Hawaiian Seacoast Artillery Command

COLONEL LEONARD L. DAVIS, *Commanding*

The activation of the 35th Coast Artillery Maintenance Detachment on 20 January 1947 brought into existence an active seacoast artillery unit, thereby re-establishing the long line of seacoast artillery organizations which have served on Oahu for a period of over forty-five years. This new maintenance detachment, although small in numbers, must care for all seacoast installations on Oahu.

With the activation of the 35th Coast Artillery Maintenance Detachment, the 867th Antiaircraft Artillery Automatic Weapons Battalion was released from assignment to the Seacoast Artillery Command and returned to the Antiaircraft Artillery Command. Batteries "A" and "B," 867th Antiaircraft Artillery Automatic Weapons Battalion, which were stationed at Fort Kamehameha while assigned to the Seacoast Artillery Command, have been moved to Fort Ruger.

Captain John A. Walder returned to the mainland for reassignment after a tour of almost eight years in Hawaii. Captain Walder was the last of those officers to return to the United States who had served with the Hawaiian Seacoast Artillery Command throughout the entire period of World War II.

Antiaircraft Artillery Training Center

San Marcelino, P. I.

APO 74

COLONEL FRANCIS A. HAUSE, *Commanding*

The training center on 2 December 1946 had an officer strength of 111 officers and 5 warrant officers. The American enlisted strength was 129 and there were 2800 Philippine Scouts. The present strength is 127 officers and 8 warrant officers. The American enlisted strength is now 107 men and there are 1686 Philippine Scouts.

The 2083d AAA Automatic Weapons Battalion, the 2084th AAA Gun Battalion, the 2086th AAA Searchlight Battalion and the 2085th AAA Operations Detachment left the Center for APO 331 on 6 December 1946. New outfits have arrived to start their training. They are the 536th AAA Gun Battalion and a composite battalion consisting of guns, automatic weapons, and searchlights. After completing their training, the 512th AAA Gun Battalion (formerly the 2026th AAA Gun Battalion (Philippine Scouts) (Provisional) was shipped to Angeles in Pampanga Province. Before departing, an inspection team from the Philippine Ground Force Command with Major Short in charge, declared the Battalion satisfactory in almost all categories.

On 12 January 1947, the 94th AAA Group moved to this station from Army Supply Point No. 3, San Fernando, Pampanga, P. I.

With the arrival of Major Langfitt's family, Lieutenant Stuckey's family and Lieutenant Stockdale's family, the total number of families on the post now is nine.

The 2000th Station Hospital was opened with the arrival of 4 Nurses headed by Captain Catharine Schneider, ANC.

Basketball, volleyball, football, badminton and ping-pong games are held during all off-duty hours. The Red Cross building opened and is having functions each night and Saturday and Sunday afternoons. On New Year's Eve there were dances held in the Red Cross Club, the enlisted Men's Club and the Officers' Club. The recreation ship QS-3 was replaced by the QS-16 and boat trips will continue to Corregidor Island as in the past.

260th AAA Group (N.G.)

Washington, D. C.

COLONEL LEROY S. MANN, *Commanding*

Federal recognition has been received by the Headquarters and Headquarters Battery, 260th AAA Gun Battalion, Major Given W. Cleek, commanding. This completes the recognition of the major headquarters of the Group. Vacancies still exist in the gun, automatic weapons and searchlight batteries in commissioned and first three grades of noncommissioned ranks. Also, qualified technical vacancies exist in the authorized ordnance maintenance company and the radar and searchlight maintenance detachments.

It appears probable that the armory will be returned to the District of Columbia by May 1st. When obtained, that Shangri-la like structure will be a great boon to the using units.

Word has been received that field training in 1947 for the Group will take place at Fort Meade, Maryland. The tentative period is the last two weeks in *July*. It is expected that the major portion of the training time will be devoted to schools for the training of the members of the units then present in order to qualify them as cadremen for further expansion.

The Antiaircraft Artillery and Guided Missiles Branch, The Artillery School

Fort Bliss, Texas

MAJOR GENERAL JOHN L. HOMER, *Officer In Charge*

The following changes occurred during the month of January 1947:

ARRIVALS

Name	*Department*
Col. Wm. M. Branan, Jr.	Post Beautification Officer
Maj. Harry DeMetropolis	Gunnery
Maj. Claud W. Stump	Duty Unassigned
Maj. Daniel B. Williams	Gunnery
Capt. Lewis J. Adams	Not yet joined
Capt. Edwin A. Anderson	Gunnery
Capt. Russell B. Buchanan	Electronics
Capt. Edward F. Dugan	Headquarters Commandant
Capt. Leonard T. Hansen	Director of Instruction
Capt. August Koenig	Not yet joined
Capt. George H. Marx	Research & Analysis
Capt. Joseph P. McElligott	Duty Unassigned
Capt. Charles W. Milmore	Not yet joined
Capt. Francis Murphy	S-4
Capt. Alvin Plobsinger	Not yet joined
Capt. Edward J. Rumph	Duty Unassigned
Capt. Anthony J. Touart	Gunnery
1st Lt. James W. Chaney	Research & Analysis
1st Lt. I. J. Irvin, Jr.	Research & Analysis
1st Lt. Jack R. Kennaman	Research & Analysis
1st Lt. William H. McDermott	Duty Unassigned
1st Lt. Edwin F. Ore	S-3
1st Lt. Adolph T. Serfin	S-1
Capt. Edward F. Keevan	Duty Unassigned

DEPARTURES

Name	*Destination*
Lt. Col. Fred D. Bendler	Artillery School, Ft. Sill, Okla.
Lt. Col. Lynn C. Chamberlain	Sep Det 4001 ASU this sta
Lt. Col. James D. Land	Stu Det COAG with sta at British Staff College, Camberly, England.
Lt. Col. William H. Price	Artillery School, Ft. Sill, Okla.
Maj. James J. Kelly	Artillery School, Ft. Sill, Okla.

The following changes occurred during the month of February 1947:

ARRIVALS

Name	*Department*
Capt. Jack W. Bradley	Not yet joined
Capt. Wheeler B. Bowen	OQ Department
Capt. Ralph E. Young	Gunnery
1st Lt. Frederick V. McWold	S-4

DEPARTURES

Name	*Destination*
Col. Archibald D. Fisken	2558th ASU Ky ORC Instr Gp. Louisville, Ky.
Maj. Lawrence N. Reiman	Artillery School, Ft. Sill, Okla.
Capt. Richard H. Ham	WBGH, El Paso, Texas
Capt. William R. Hilferty	WBGH, El Paso, Texas
Capt. John E. Nuwer	RTC, Ft. Ord, California
Capt. Harry C. Shabanowitz	WBGH, El Paso, Texas
Capt. Temple C. Smith	3639th TC Trk Co., Ft. Bliss, Texas.
1st Lt. Archie R. Chase	Separated from Service
1st Lt. William V. Clayton	O/S Repl. Depot, Cp. Stoneman, California
1st Lt. Cecil Z. Holt	AMC, Washington, D. C.
1st Lt. I. J. Irvin	Caribbean Defense Command
1st Lt. Edwin F. Ore	WBGH, El Paso, Texas
2d Lt. Thomas R. Oaks	RTC, Ft. Ord, California.

65TH ANTIAIRCRAFT ARTILLERY GROUP, FORT AMADOR
PANAMA CANAL DEPARTMENT

COLONEL MARVIL G. ARMSTRONG, *Commanding*

As of 15 January 1947, the AAA Group, Panama Canal Department was redesignated the 65th AAA Group but retained its station, personnel and missions. The new designation is worthy of note because the 65th CA (AA) Regiment was formed here in Panama some years ago, deactivated about 1932, reactivated at Fort Scott, California, 1938, and served in the Los Angeles Area from 1941 until deactivated as a regiment in 1943. Then separate battalions were formed at Fort Ord, California. The Regimental Headquarters became the 65th AAA Group, served in the Aleutians and was deactivated in February 1944. The Group Commander at that time was Colonel Marvil G. Armstrong, its present Commander, who is enjoying the unique experience of having commanded the Group in two distinct instances and in two dissimilar locations.

In line with Department plans for the 1947 period, joint exercises between antiaircraft artillery units and fighter planes from the 6th Fighter Wing are being held periodically, in which attacks on canal installations are simulated.

Joint parades are being held monthly, the first took place on 15 February in which all service and tactical troops participated in a colorful ceremony. At the Pacific Sector parade at Fort Clayton, Canal Zone, in which the 65th AAA Group and 903d AAA (AW) Battalion participated, Brigadier General F. M. Hardaway, Sector Commander, presented decorations.

COAST ARTILLERY ORDERS

WD and AGF Special Orders covering the period 31 December 1946 through 28 February 1947. Promotions and Demotions are not included.

Colonels

Blackwell, Herbert H., to AGO Casuals, Washington, D. C., w/sta at Ft. Douglas, Utah, for dy w/Sixth Army Off Interview Board.
Braly, William C., to be retired.
Cocroft, Reginald B., to be retired.
Dutton, Donald L., to Second Army, Ft. Geo. G. Meade, Md.
Fiken, Archibald D., to 2558th ASU Kentucky OR Instr Gp, Louisville, Ky. Detailed as Sr. Instr OR State of Kentucky.
Goff, John L., to 6601st ASU Calif. NG Instr Gp, c/o State AG, State Office Bldg., No. 1 Sacramento 14, Calif., w/sta at San Francisco. Detailed as CAC Instr Calif. NG.
Harris, Charles S., to OC of S, Washington, D. C. For dy w/WD Manpower Board.
Jefferson, Leslie W., to Hq Seventh Army, Atlanta, Ga., w/sta at Nashville, Tenn. Detailed as CA Instr. Tennessee NG.
Jones, Clifford R., to AGO Casuals, Washington, D. C. Atchd to Hq MDW, Washington, D. C.
Kahle, John F., to AGO Casuals, Washington, D. C., w/sta at Ft. Meade, Md., for dy w/Second Army Off Interview Board.
McCormick, Thomas C., to be retired.
Merritt, Wilmer B., to OC of S, Washington, D. C. For dy w/WD Manpower Board.
Mitchell, Lawrence C., 1155 ASU Office SR NG Instr for Mass., Boston, Mass. Detailed as CA Instr.
Phillips, Robert E., Hq. First Army, Governors Island, N. Y.
Schmidt, Victor G., Reld fr detail in Sig C.
Thomas, Benjamin A., to RTC, Ft. Lewis, Washington.
Tracy, Maxwell W., to be retired.
Wilson, Auston M., Jr., 6601st ASU Calif. NG Instr Gp, c/o State AG, State Office Bldg., No. 1, Sacramento 14, Calif., w/sta at San Francisco, Calif.
Wolfe, Shuey E., AGO Casuals, Washington, D. C., w/sta at Ft. Douglas, Utah, for dy w/Sixth Army Off Interview Board.

Lieutenant Colonels

Cummings, Lawrence E., to Hq AGF, Ft. Monroe, Va., w/sta at Washington, D. C.
Dougan, Murray D., to OC of S, Washington, D. C., for dy in Office Dir Plans & Opr.
Gregory, Porter T., to be retired.
Guhl, Robert C., to 2554th ASU Virginia OR Instr Gp, Richmond, Va. Detailed as CAC Instr OR State of Virginia.
Hale, Harry R., to AFPAC, Yokohama, Japan. Temp mailing address Casual Officers Co., Cp. Stoneman ORD, Pittsburg, Calif.
Hempstead, Edward B.,to Hq Second Army, Baltimore, Md.
Henry, William J., to detailed in FA.
McKenney, Stewart L., to OC of S, Washington, D. C.
Mannes, Conrad O., to USFFE, Korea. Temp mailing address Casual Officers Co., Cp. Stoneman ORD, Pittsburg, Calif.
Sain, Ben, to detailed in Sig C.
Schechinger, Ernest S. T., to Fifth Army Br US Disciplinary Bks, Ft. Leavenworth, Kans.
Schreiber, William L., to AGF Board No. 1, Ft. Bragg, N. C., w/sta at Ft. Baker, Calif.
Seff, Alan, to resigned.
Shumate, Ervin H., to Atlanta Public High Schools, Atlanta, Ga.
Stewart, Charles W., to AGF Pacific, Ft. Shafter, TH. Temp mailing address Casual Officers Co., Cp. Stoneman ORD, Pittsburg, Calif.
Wallace William A., to Sixth Army, Cp. Cooke, Calif.

Majors

Barker, Troy A., to Hq Seventh Army, Atlanta, Ga., w/sta at Tuscaloosa, Ala. Detailed as CA Instr OR State of Alabama.
Barrett, Donald E., to Hq Seventh Army, Atlanta, Ga.
Batdorf, Richard O., to USFFE, Tokyo, Japan. Temp mailing address Casual Officers Co., Cp. Stoneman ORD, Pittsburg, Calif.
Behrend, Wilmer R., to reld fr detail in TC.
Brown, Edward A., to Philippine-Ryukyus Command, Okinawa, Ryukyus Islands. Temp mailing address Casual Officers Co., Cp. Stoneman ORD, Pittsburg, Calif.
Coe, Kenneth C., to 5252d ASU Office Illinois State Sr Instr OR, Chicago, Ill. Detailed as CA Instr Or State of Illinois.
Coleman, Frank L., to AGF Pacific, Ft. Shafter, TH. Temp mailing address Casual Officers Co., Cp. Stoneman ORD, Pittsburg, Calif.
Corbett, John B., Hq First Army, Governors Island, N. Y.
Cornwall, Paul R., to OC of S, Washington, D. C.
Cox, Joseph C., to AGF, Pacific, Ft. Shafter, TH. Temp mailing address Casual Officers Co., Cp. Stoneman ORD, Pittsburg, Calif.
DeGregory, Arthur M., to AGF Pacific, Ft. Shafter, TH. Temp mailing address Casual Officers Co., Cp. Stoneman ORD, Pittsburg, Calif.
Denton, Earl L., to 5261st ASU Office Wisconsin State Sr Instr OR, Milwaukee, Wisc. Detailed as CA Instr OR State of Wisconsin.
Dunn, Joseph F., to detailed in FA.
Farrar, William L., Stu Det, The Arty Sch, Ft. Sill, Okla. TDY for approx 16 wks at AAF Liaison Pilot Sch, San Marcos AA Fld, Texas.
Hammond, Harold C., to Second Army US Rctg SV, Philadelphia, Pa.
Hanson, Arthur F., to ASU Office Sr State OR Instr for New Hampshire, Manchester, N. H. Detailed as Assistant to Sr Instr OR State of N. H.
Harmon, Paul Alden, to 2551st ASU Maryland State Sr Instr OR, Baltimore, Md.
Kane, Theodore F., Jr., to 5256th ASU Office Minnesota State Sr Instr OR, Minneapolis, Minn. Detailed as CAC Instr.
Lonsinger, Roy W., to 5255th ASU Office Michigan State Sr Instr OR, Detroit Mich. Detailed as CA Instr OR State of Michigan.
Moore, James M., to 6601st ASU California NG Instr Gp c/o State AG, State Office Bldg No. 1, Sacramento 14, Calif. Detailed as CA Instr Calif. NG.
Moore, Robert A., to USFFE, Yokohama, Japan. Temp mailing address Casual Officers Co., Cp. Stoneman ORD, Pittsburg, Calif.
Murphy, James O., to Army Advisory Gp, Nanking, China. Temp mailing address Casual Officers Co., Cp. Stoneman ORD, Pittsburg, Calif.
Nagel, James R., to 284th AAA AW Bn, Ft. Bliss, Texas.
Osthues, Henry Everett, to CA 1244th ASU O Sr ORC Instr for Delaware, Wilmington, Delawate. For dy as CAC Instr.
Pell, Kenneth E., to Army Chemical Center, Edgewood Arsenal, Md.
Poullada, Leon B., to USFET, Frankfurt, Germany. Temp mailing address Casual Army PO & PE staging Area NYPE, Brooklyn, N. Y.
Reiman, Lawrence N., to the Arty Sch, Ft. Sill, Okla.
Rounds, Raymond B., to Shanghai, China. Mailing address Casual Personnel Section APO 909, c/o Postmaster, San Francisco, Calif.
Saberhagen, Harold A., to the Ground Gen Sch, Ft. Riley, Kans. for dy w/staff & faculty.
Sage, Winfield H., to USFFE, Yokohama, Jap[illegible] Temp mailing address Casual Officers Co., [illegible] Stoneman ORD, Pittsburg, Calif.
Smart, Burton, Jr., to detailed in TC.
Stump, Claud W., to AA & GM Br the A[illegible] Sch, Ft. Bliss, Texas.
Tison, Gerald J., to Univ of Calif., Berke[illegible] Calif.
Watson, William W., to Hq Fifth Army, [illegible]cago, Ill.
Wellenreiter, F. L., to USFFE, Yokohama, Jap[illegible] Temp mailing address Casual Officers Co., [illegible] Stoneman ORD, Pittsburg, Calif.
Winslett, Edmund J., to Sixth Army 6002d A[illegible] Presidio of San Francisco, Calif.

Captains

Allen, Charles L., to AFPAC, Yokohama, Ja[illegible] Temp mailing address Casual Officers Co., [illegible] Stoneman ORD, Pittsburg, Calif.
Anderson, Norman L., to AFPAC, Yokoh[illegible] Japan. Temp mailing address Casual Offi[illegible] Co., Cp. Stoneman ORD, Pittsburg, Calif.
Arnold, William E., Jr., to Student Det, [illegible] Arty Sch, Ft. Sill, Okla. TDY 16 wk[illegible] AAF Ln Pilot Tng Sch, San Marcos AA [illegible] San Marcos, Texas.
Batchelder, James Henry, to CAC AGF B[illegible] No. 4, Ft. Bliss, Texas.
Bertram, Roger A., to detailed in CE.
Bianchi, Joseph J., to CIC Center Holabird [illegible] Depot, Baltimore, Md.
Bishop, Raymond Chapman, to CAC RTC, [illegible] Dix, N. J.
Boiles, Damon J., to the Arty Sch, Ft. Sill, O[illegible]
Barrett, Robert F., Jr., to Detailed in Inf. R[illegible] Ft. Ord, Calif.
Bradley, Jack W., to AA & GM Br the A[illegible] Sch, Ft. Bliss, Texas.
Bristol, Thomas F., to The Citadel, Charle[illegible] S. C.
Brooks, Winston S., to AGF Pacific, Ft. Sha[illegible] TH. Temp mailing address Casual Officer [illegible] Cp. Stoneman ORD, Pittsburg, Calif.
Calkins, James E., to AGF Pacific, Ft. Sha[illegible] TH. Temp mailing address Casual Off[illegible] Co., Cp. Stoneman ORD, Pittsburg, Calif.
Carpenter, Delbert O., to AGF Pacific, Shafter, TH. Temp mailing address Ca[illegible] Officers Co., Cp. Stoneman ORD, Pitts[illegible] Calif.
Chin, George, to Sixth Army RTC, Ft. [illegible] Calif.
Cole, Charles B., Jr., to detailed in FA.
Cox, John P., Jr., to 284th AAA AW Bn ([illegible] Ft. Bliss, Texas.
Craddock, Francis B., to detailed in QMC.
Damon, Charles W., Jr., to USFFE, Yokoh[illegible] Japan. Temp mailing address Casual Of[illegible] Co., Cp. Stoneman ORD, Pittsburg, Calif.
Daniels, Percy Elridge.
Davis, James W., to Reld fr detail in TC.
Dickinson, David L., to RCT, Ft. Ord, Calif.
Dolsey, Herbert S., to USFFE, Yokohama, J[illegible] Temp mailing address Casual Officers Co., [illegible] Stoneman ORD, Pittsburg, Calif.
Dong, Charles, to CIC Center, Holabird [illegible] Depot, Baltimore, Md.
Duncan, Ralph G., to Caribbean Defense C[illegible] mand. TDY Army Information Sch, Ca[illegible] Bks, Pa. Temp mailing address after 25 [illegible] New Orleans Pers Center NOPE, New [illegible] leans, La.
Eckert, Thomas A., to the Arty Sch, Ft. [illegible] Okla.
Fahy, Johnson K., to USFMTO. Temp m[illegible] address Casual Officers Det ORD, Cam[illegible] mer, N. J.

..., Vincent F., to USFFE, Korea. Temp mail-..g address Casual Officers Co., Cp. Stoneman ..RD, Pittsburg, Calif.
..., Norman E., to AGF Pacific, Ft. Shafter, TH. Temp mailing address Casual Officers Co., Cp. Stoneman ORD, Pittsburg, Calif.
..., Thomas L., to AFPAC, Yokohama, Japan. Temp mailing address Casual Officers Co., Cp. Stoneman ORD, Pittsburg, Calif.
..llgan, Edward P., to Hq Seventh Army, At-..nta, Ga. w/sta at Charleston, S. C. Detailed as CA Instr OR State of South Carolina.
..., Freeman M., to AFPAC, Yokohama, Japan. Temp mailing address Casual Officers Co., Cp. Stoneman ORD, Pittsburg, Calif.
..nt, Benson, to AGF Pacific, Ft. Shafter, TH. Temp mailing address Casual Officers Co., Cp. Stoneman ORD, Pittsburg, Calif.
..shong, James D., to AFPAC, Yokohama, Japan. Temp mailing address Casual Officers Co., Cp. Stoneman ORD, Pittsburg, Calif.
..., Richard H., to RTC, Ft. Ord, Calif.
..milton, Robert B., to RTC, Ft. Ord, Calif.
..ward, Charles E., to AGF Pacific, Ft. Shafter, TH. Temp mailing address Casual Officers Co., Cp. Stoneman ORD, Pittsburg, Calif.
..ward, Robert N., Seventh Army US Army Rctg Sv, Atlanta Dis, Atlanta, Ga.
..ebstettler, John R., to Student Det the Arty Sch, Ft. Sill, Okla. TDY 16 wks at AAF Ln Pilot Tng Sch, San Marcos AA Fld, San Mar-..os, Texas.
..kson, Page S., to detailed in FA.
..nson, Henry T., AFPAC, Yokohama, Japan. Temp mailing address Casual Officers Co., Cp. Stoneman ORD, Pittsburg, Calif.
..nston, Archie B., to Hq Seventh Army, At-..lanta, Ga., w/sta at Wilmington, N. C. Detailed as CA Instr OR State of North Carolina.
..es, Harry Morrow, to CAC RTC, Ft. Ord, Calif.
..es, William M., to First Army, Ft. Banks, Mass.
..ldfleish, Edwin, to detailed at Christian Broth-..ers College, St. Louis, Mo.
..gan, Edward F., to AA & Gm Br the Arty Sch, Ft. Bliss, Texas.
..mp, Herbert E., to detailed in FA.
..upp, Kenneth Johnson, to CAC RTC, Ft. Ord, Calif.
..eese, Edgar Alfred, to CAC RTC, Ft. Ord, Calif.
..ahn, Roy Carl, to CA HD of NY, Ft. Hancock, N. J.
..Plant, Palmer L., to USFFE, Yokohama, Japan. Temp mailing address Casual Officers Co., Cp. Stoneman ORD, Pittsburg, Calif.
..th, Eugene Lewis, to CA RTC, Ft. Ord, Calif.
..e, John K., Jr., to AGF Pacific, Ft. Shafter, TH. Temp mailing address Casual Officers Co., Cp. Stoneman ORD, Pittsburg, Calif.
..ng, Vincent Christopher, to CA RTC, Ft. Lewis, Wash.
..ndgren, Roy H., to USFFE, Yokohama, Japan. Temp mailing address Casual Officers Co., Cp. Stoneman ORD, Pittsburg, Calif.
..Alister, John M., to Columbus High Schools, Columbus, Ga.
..Cloud, Robert Reid, to reld fr active dy.
..Connell, Richard M., to the Ground Gen Sch, Ft. Riley, Kansas.
..Nair, Donald C., to AA & GM Br the Arty Sch, Ft. Bliss, Texas.
..acklin, George T., to CIC Center, Holabird Sig Depot, Baltimore, Md.
..athews, Francis B., to RS 14, Cp. Beale, Calif.
..itchell, Robert C., to Seventh Army, Ft. Jack-..son, S. C.
..oreau, Alfred, to Sixth Army 6402d ASU Southern California-Arizona Rctg Dist, Ft. MacArthur, Calif.
..oller, Walter O., to Hq Seventh Army, Atlanta, Ga., w/sta at Hattiesburg, Miss. Detailed as CA Instr OR State of Mississippi.
..ornford, Howard F., to reld fr detail in AGD.
..ower, John E., to RTC, Ft. Ord, Calif.
..Connell, John E., to Hq AGF, Ft. Monroe, Va., for dy w/G-1 Section.
..unas, Albert, to 82d Abn Div., Ft. Bragg, N. C.

Parham, Douglas F., to First Army, 1202d ASU Rctg Dist 11, w/sta at Ft. Banks, Mass.
Patterson, Robert C., to Detailed in CE. Fifth Army, Cp. Carson, Colo.
Perlman, Abraham, to Sixth Army 6901st ASU, Ft. Mason, Calif.
Perrotta, Donato F., to RTC, Ft. Dix, N. J.
Peterson, John T., to detailed in Ord Dept.
Peterson, Theodore W., to First Army HQ & HQ Det, HD of NY, Ft. Hancock, N. J.
Redinger, Joseph C., to AFPAC, Yokohama, Japan. Temp mailing address Casual Officers Co., Cp. Stoneman ORD, Pittsburg, Calif.
Reilly, Francis W., to Philippine-Ryukyus Command, Okinawa, Ryukyus Islands. Temp mailing address Casual Officers Co., Cp. Stoneman ORD, Pittsburg, Calif.
Rich, Hal H., to AGF Pacific, Ft. Shafter, TH. Temp mailing address Casual Officers Co., Cp. Stoneman ORD, Pittsburg, Calif.
Ride, Walter Thayer, Jr., to CAC RTC, Ft. Lewis, Wash.
Robinson, John L., to AFPAC, Yokohama, Japan. Temp mailing address Casual Officers Co., Cp. Stoneman ORD, Pittsburg, Calif.
Rumph, Edward J., to AA & GM Br the Arty Sch, Ft. Bliss, Texas.
Ryan, Daniel David, Jr., to CA RTC, Ft. Dix, N. J.
Schwyn, James Macklin, to CAC RTC, Ft. Ord, Calif.
Scully, Bernard R., to First Army HQ & Hq Det, HD of Portsmouth, Cp. Langdon, N. H.
Sibilsky, Edward L., to RTC, Ft. Ord, Calif.
Sitnik, Bronislaw E., to Stu Det the Arty Sch, Ft. Sill, Okla. TDY approx 16 wks AAF Liaison Pilot Sch, San Marcos AA Fld, Texas.
Skrien, Cyrus A., to USFFE, Yokohama, Japan. Temp mailing address Casual Officers Co., Cp. Stoneman ORD, Pittsburg, Calif.
Speshock, Edward J., to 1129th ASU Office Sr State OR Instr for New Hampshire, Manchester, N. H. Detailed as CA Instr OR State of N. H.
Sullivan, Daniel L., Jr., to 2552d ASU Pennsylvania OR Instr Gp, Philadelphia, Pa. Detailed as CA Instr OR State of Pennsylvania.
Temme, Eugene J., to 1st AAA Guided Missiles Bn, White Sands Pr Gr., Las Cruces, New Mexico.
Van Gundy, Daniel F., to AGF Board No. 4, Ft. Bliss, Texas, w/sta at Washington, D. C. for dy w/AC of AS-2.
White, Ralph W., to reld fr active dy.
Wilson, Louis A., to the Arty Sch, Ft. Sill, Okla.
Wyatt, William L., to AFPAC, Yokohama, Japan. Temp mailing address Casual Officers Co., Cp. Stoneman ORD, Pittsburg, Calif.
Young, Ralph E., to AA & GM Br the Arty Sch, Ft. Bliss, Texas.

FIRST LIEUTENANTS

Balsley, Kenneth R., to AGF Pacific, Ft. Shafter, TH. Temp mailing address Casual Officers Co., Cp. Stoneman ORD, Pittsburg, Calif.
Bellany, Athelston A., to AFPAC, Yokohama, Japan. Temp mailing address Casual Officers Co., Cp. Stoneman ORD, Pittsburg, Calif.
Berger, Alexander E., to AGF Pacific, Ft. Shafter, TH. Temp mailing address Casual Officers Co., Cp. Stoneman ORD, Pittsburg, Calif.
Brickner, Fred William, to 1st AAA GM Bn, White Sands PG, Las Cruces, New Mex.
Brosnan, John R., to Caribbean Defense Command. TDY Army Information Sch, Carlisle Bks, Pa. Temp mailing address after 25 May, New Orleans Pers Center NOPE, New Orleans, La.
Braxley, Samuel E., to AGF Pacific, Ft. Shafter, TH. Temp mailing address Casual Officers Co., Cp. Stoneman ORD, Pittsburg, Calif.
Brown, Archie D., to AGF Pacific, Ft. Shafter, TH. Temp mailing address Casual Officers Co., Cp. Stoneman ORD, Pittsburg, Calif.
Bryan, William J., to USFET, Frankfurt, Germany. Temp mailing address Casual Army PO & Pe staging area NYPE, Brooklyn, N. Y.
Campbell, Daniel G., to First Army Hq & Hq Det, HD of Boston, Ft. Banks, Mass.

Cary, James O., to AGF Pacific, Ft. Shafter, TH. Temp mailing address Casual Officers Co., Cp Stoneman ORD, Pittsburg, Calif.
Chaney, James W., to AA & GM Br the Arty Sch, Ft. Bliss, Texas.
Clayton, William V., Jr., to AFPAC, Yokohama, Japan. Temp mailing address Casual Officers Co., Cp. Stoneman ORD, Pittsburg, Calif.
Cline, Herbert N., to AFPAC, Yokohama, Japan. Temp mailing address Casual Officers Co., Cp. Stoneman ORD, Pittsburg, Calif.
Cleary, Louis X., to AGF Pacific, Ft. Shafter, TH. Temp mailing address Casual Officers Co., Cp. Stoneman ORD, Pittsburg, Calif.
Copeland, Dewitt T., Jr., to Seventh Army ASU 3160th Army Rctg Sv., Birmingham Dist, Birmingham, Ala.
Davis, Glen, to CIC Center, Holabird Sig Depot, Baltimore, Md.
Derrick, Charles D., to CIC Center, Holabird Sig Depot, Baltimore, Md.
Dicke, William M., Jr., to AGF Pacific, Ft. Shafter, TH. Temp mailing address Casual Officers Co., Cp. Stoneman ORD, Pittsburg, Calif.
Elliot, Henry W., to AFPAC, Yokohama, Japan. Temp mailing address Casual Officers Co., Cp. Stoneman ORD, Pittsburg, Calif.
Ellis, Albert M., to Detailed in Ord Dept.
Evans, Daniel, to Armd Sch, Ft. Knox, Ky.
Fisher, Marvin, to AGF Pacific, Ft. Shafter, TH. Temp mailing address Casual Officers Co., Cp. Stoneman ORD, Pittsburg, Calif.
Gale, Don Schuyler, to CA 2116th ASU, Ft. Hayes, Columbus, Ohio.
Hain, Clarke D., to Resigned.
Hill, Harold R., to AFPAC, Yokohama, Japan. Temp mailing address Casual Officers Co., Cp. Stoneman ORD, Pittsburg, Calif.
Huderson, Tommie D., to Detailed in TC.
Humble, Jake, Jr., to USFFE, Yokohama, Japan. Temp mailing address Casual Officers Co., Cp. Stoneman ORD, Pittsburg, Calif.
Irvin, I. J., Jr., to Caribbean Defense Command. TDY Army Information Sch, Carlisle Bks, Pa. Temp mailing address after 25 May, New Orleans Pers Center NOPE, New Orleans, La.
Jones, Bertrano H., to Seventh Army 3160th ASU Hq Army Rctg Sv, Birmingham Dist, 715 Frank Nelson Bldg., Birmingham, Ala., w/sta at US Army Rctg Sub Sta, Army Rctg Sv, Birmingham Dist, Columbia, Tenn.
Kammel, Harry J., to AGF Pacific, Ft. Shafter, TH. Temp mailing address Casual Officers Co., Cp. Stoneman ORD, Pittsburg, Calif.
Kershinar, Louis Peter, to CAC RTC, Fort Lewis, Wash.
Lipscomb, Ira H., to AFPAC, Yokohama, Japan. Temp mailing address Casual Officers Co., Cp. Stoneman ORD, Pittsburg, Calif.
McDermott, William H., to AA & GM Br the Arty Sch, Ft. Bliss, Texas.
Martin, Guy V., to 284th AAA AW Bn (SP), Ft. Bliss, Texas.
Martin, Harry W., to USFFE, Yokohama, Japan. Temp mailing address Casual Officers Co., Cp. Stoneman ORD, Pittsburg, Calif.
Martin, Irwin E., to the Armd Sch, Ft. Knox, Ky.
Metz, James L., to AGF Pacific, Ft. Shafter, TH. Temp mailing address Casual Officers Co., Cp. Stoneman ORD, Pittsburg, Calif.
Morris, Eugene F., to AFPAC, Yokohama, Japan. Temp mailing address Casual Officers Co., Cp. Stoneman ORD, Pittsburg, Calif.
Nash, James H., to Detailed in CE.
Nichols, William R., to reld from detail in FA.
O'Connor, Gerald J., to Detailed in TC.
Ogg, William B., to USFFE, Yokohama, Japan. Temp mailing address Casual Officers Co., Cp. Stoneman ORD, Pittsburg, Calif.
Owen, Sammie H., to the Armd Sch, Ft. Knox, Ky.
Raperto, Ralph Bart, to CAC RTC, Ft. Dix, N. J.
Riggs, William P., to AGF Pacific, Ft. Shafter, TH. Temp mailing address Casual Officers Co., Cp. Stoneman ORD, Pittsburg, Calif.
Rollinson, Howard E., to AFPAC, Yokohama, Japan. Temp mailing address Casual Officers Co., Cp. Stoneman ORD, Pittsburg, Calif.

Serpe, Anthony D., to AGF Pacific, Ft. Shafter, TH. Temp mailing address Casual Officers Co., Cp. Stoneman ORD, Pittsburg, Calif.
Shafer, Frederick R., to AGF Pacific, Ft. Shafter, TH. Temp mailing address Casual Officers Co., Cp. Stoneman ORD, Pittsburg, Calif.
Smith, William Q., to AFPAC, Yokohama, Japan. Temp mailing address Casual Officers Co., Cp. Stoneman ORD, Pittsburg, Calif.
Thomson, Chester B., to AGF Pacific, Ft. Shafter, TH. Temp mailing address Casual Officers Co., Cp. Stoneman ORD, Pittsburg, Calif.
Tolbert, Charles C., to AFPAC, Yokohama, Japan. Temp mailing address Casual Officers Co., Cp. Stoneman ORD, Pittsburg, Calif.
Tompkins, Arthur F., to Seventh Army, Ft. Jackson, S. C.
Tuscany, Franklin H., to AGF Pacific, Ft. Shafter, TH. Temp mailing address Casual Officers Co., Cp. Stoneman ORD, Pittsburg, Calif.
Tuttle, Charles F., Jr., to AFPAC, Yokohama, Japan. Temp mailing address Casual Officers Co., Cp. Stoneman ORD, Pittsburg, Calif.
Weatherford, Gerald Francis, to CA RTC, Ft. Ord, Calif.
Wilson, David J., to CIC Center, Holabird Depot, Baltimore, Md.
Wise, Wayne Arthur, to CA RTC, Ft. Ord, C

SECOND LIEUTENANTS

Davis, William L., to CIC Center, Holabird Sig Depot, Baltimore, Md.
Johnson, Lee A., to AFPAC, Yokohama, Jap Temp mailing address Casual Officers Co., C Stoneman ORD, Pittsburg, Calif.
Oaks, Thomas R. F., to RTC, Ft. Ord, Calif.
Reynolds, Warren C., to the Armd Sch, Knox, Ky.

The Official Pictorial History of the

AAF

The first complete graphic record of the AAF from the Wright Flyer of 1909 to the giant Superfortress of today.

600 dramatic photos, 25 full-color drawings, and a complete catalogue of military planes.

Price $10. *(All royalties go to the AAF Aid Society.)*

SEND YOUR ORDERS TO
BOOK DEPARTMENT
COAST ARTILLERY JOURNAL

MAGAZINE SUBSCRIPTIONS

Subscribe to ALL Magazines Through The JOURNAL
SPECIAL DISCOUNTS on orders for two or more publications.
Appropriately titled magazine binders are available through the JOURNAL. Prices vary with the size of the magazine: 10% discount F.O.B. Springfield, Mass.

The next time you order periodicals for the club, day room, or yourself, get a quotation from

THE COAST ARTILLERY JOURNAL
631 Pennsylvania Avenue, N.W. WASHINGTON 4, D. C.

BOOKS and MANUALS

The Coast Artillery Journal can get you any book in print. This is a list of books ready for prompt shipment.

Titles preceded by a star (★) are available for purchase only by members of the Armed Services on active duty.

BEST SELLERS

Fiction

...s Thy Conquests (Hayes)	2.75
...ronada (Marmur)	2.75
...mal Farm (Orwell)	1.75
...h of Triumph (Remarque)	3.00
...'s Daughter (Marquand)	2.75
...ack Rose (Costain)	1.00
...ionnia Mews (Sharp)	2.75
...mmand Decision (Haines)	2.50
...ell Is a Lonely Man (Wood)	3.00
...ldimer Street (Collins)	3.00
...ata At Anderson's House (Williamson)	2.75
Holdfast Gaines (Shepard)	3.00
Golden Egg (Pollak)	3.00
Hucksters (Wakeman)	2.50
Idols of the Cave (Prokosch)	2.75
The King's General (du Maurier)	2.75
Lord Hornblower (Forester)	2.50
Lydia Bailey (Roberts)	3.00
Miracle Of The Bells (Janney)	3.00
Mr. Adam (Frank)	2.50
Mr. Roberts (Heggen)	2.50
Night and the City (Kersh)	2.75
Peacock Sheds His Tail (Hobart)	2.75
Rhubarb (Smith)	2.00
Saigon Singer (Mason)	2.50
The Salem Frigate (Jennings)	3.00
The Snake Pit (Ward)	2.50
Tales of The South Pacific (Michener)	3.00
Then and Now (Maugham)	2.50
Too Early To Tell (Weidman)	3.00
Weak and the Strong (Kersh)	2.50

Non-Fiction

As He Saw It (Roosevelt)	3.00
Age of Jackson (Schlesinger)	5.00
The American (Fast)	3.00
Arsenal of Democracy (Nelson)	4.00
Dear Fatherland, Rest Quietly (Bourke-White)	3.00
The Egg and I (MacDonald)	2.75
I Chose Freedom (Kravchenko)	3.50
Not So Wild a Dream (Sevareid)	3.50
Our Share of Night (Middleton)	3.75
The Plotters (Carlson)	3.50
Reconquest (Abend)	2.75
The Roosevelt I Knew (Perkins)	3.75
Running The Country (American Politics In Action)	3.95
Shore Dimly Seen (Ellis Arnall)	3.00
Soldier's Album	5.00
The Strange Alliance (Deane)	3.75
The Strength We Need (Eliot)	3.00
Stricken Land (Tugwell)	4.50
Surreptitious Entry (George)	2.75
Thank You, Mr. President (Smith)	2.50
This is My Story (Budenz)	3.00
Together (Marshall)	3.50
Tour of Duty (Dos Passos)	3.00
22 Cells in Nuremberg (Kelley)	3.00
Where Are We Heading? (Welles)	3.00

WORLD WAR II

The Big Picture

Brereton Diaries	4.00
Cloak and Dagger (MacBain and Ford)	2.50
Doctors at War (Fishbein)	5.00
Fighting Divisions (Kahn & McLemore)	2.50
Global Warfare (Mowrer & Rajchman)	1.00
Industry—Ordnance Team (Campbell)	5.00
Iron Out of Calvary (Hall)	4.00
The Lost War (Kato)	2.75
The Mightiest Army (Detzer)	.35
New Ways of War (Wintringham)	.25
Nurses in Action (Flikke)	2.50
Paper Bullets (Margolin)	2.50
1939 to 1943—Report on the Army (Gen. Marshall)	
Cloth edition	1.50
Fighting Forces edition	.25
1943 to 1945—General Marshall's Report	
Paper edition	1.00
Fighting Forces edition	.25
Map supplement	1.25
Secret Missions (Zacharias)	3.75
Secret Session Speeches of Winston Churchill	2.00
Selected Speeches and Statements of General of the Army George C. Marshall	
Cloth edition	2.75
Fighting Forces edition	.25
Sub Rosa (Alsop and Braden)	2.50
12 Months That Changed the World (Lesueur)	3.00
U. S. at War (G.P.O.)	1.00
The War Reports (Marshall, King, Arnold)	7.50
We Caught Spies (Schwarzwalder)	3.00
World War II (Shugg and DeWeerd)	3.75
Years of Wrath (Low)	3.75

Air Forces in Action

Air Forces Reader (Carlisle)	3.75
Air Gunner (Hutton & Rooney)	2.50
Air Offensive Against Germany (Michie)	2.00
America's Fighting Planes in Action (Kinert)	1.00
Malta Spitfire (Buerling)	2.50
Our Fighting Planes (Kinert)	3.75
Target Germany (VIII Bomber Command)	1.00
Thirty Seconds Over Tokyo (Lawson)	.25
War in the Air, 1939-41 (Barnett)	3.50

To ORDER ANY BOOK

listed in this book list or reviewed in this issue—or any other book--

HANDY ORDER FORM

CUT OUT AND MAIL

WHEN FIGURING ACTUAL COST OF BOOKS TO YOU, DEDUCT 15% ON ORDERS OF $2.00 OR MORE

THE COAST ARTILLERY JOURNAL
631 Pennsylvania Ave., N.W.
Washington 4, D. C.

Please send the following books:

☐ I enclose $----------

☐ Send bill to Company Fund, ----------
Name (Please print)

☐ Please charge to my account.

Name (Please print)

(Address or box number)

(Town or APO) (Postal zone) (State)

(2-47)

CBI Theater

Burma Surgeon (Seagrave)
Cloth edition 3.00
★Fighting Forces edition ..... .25
Retreat With Stilwell (Belden) 3.00
Merrill's Marauders (Official) ..... .40
Thunder Out of China (White & Jacoby) 3.50
Wrath in Burma (Eldridge) 3.00

European Theater

Armies on Wheels (Marshall) 2.50
Bastogne: The First Eight Days (Marshall) 3.00
Blitzkrieg: Armies on Wheels (Marshall) ..... .25
Blitzkrieg: Its History (Marshall) 2.00
Brave Men (Pyle) 3.00
Dress Rehearsal (Reynolds) 2.00
Eisenhower's Report (6 June 44–8 May 45) 1.00
Engineers in Battle (Thompson) 2.00
48 Million Tons to Eisenhower (Leigh) 2.00
From the Volturno to the Winter Line (Official) ..... .25
I Knew Your Soldier (Stevenson & Martin) ..... .25
Invasion (Wertenbaker) 2.50
Invasion Diary (Tregaskis) 2.75
Invasion in the Snow (London-Davies) 2.50
Modern Battle (Thompson) ..... .25
The Monastery (Majdalany) 2.00
My Three Years With Eisenhower (Butcher) 5.00
Omaha Beachhead (WD Historical) 1.50
Paratroops (Miksche) 2.50
Patton and His Third Army (Wallace) 3.00
Purple Heart Valley (Bourke-White) 3.00
Saint Lo (G.P.O.) 1.25
Salerno (Official) ..... .55
The Last Phase (Millis) 2.50
The Six Weeks War (Draper) 3.00
Tank Fighter Team (Gerard) 1.25
Top Secret (Ingersoll) 3.00
Up Front (Mauldin) 1.00
Volturno ..... .35
War in the West (Villefroy) 2.50

North African Theater

Artist at War (Biddle) 3.50
The Battle is the Pay-Off (Ingersoll)
Cloth edition 2.00
Fighting Forces edition ..... .25
Conquest of North Africa (Clifford) 3.00
Don't Blame the Generals (Morehead) 3.50
Here is Your War (Pyle) 3.00
One Continent Redeemed (Ramsey) 2.50
One Damn Thing After the Other (Treanor) 2.50
Pipeline to Battle (Rainier)
Cloth edition 2.50
Fighting Forces edition ..... .25

Pacific Theater

Admiralties ..... .40
Bridge to Victory (Handleman) 2.00
Campaigns of The Pacific (G.P.O.) 2.25
Capture of Attu By Men Who Fought There
Cloth edition 2.00
Fighting Forces edition ..... .25
★The Fight at Pearl Harbor (Clark) ..... .25
General Wainwright's Story (Wainwright & Considine) 3.00
Green Armor (White) 3.00
Guadalcanal Diary (Tregaskis)
Cloth edition 2.50
Fighting Forces edition ..... .25
Guam ..... .35
Interrogation of Japanese Officials (G.P.O.)
Vol. I 1.50
Vol. II 1.50
Island Victory (Marshall)
Cloth edition 2.00
Fighting Forces edition ..... .25
I Saw the Fall of the Philippines (Romulo) 3.00
The Last Chapter (Pyle) 2.50
Leyte Calling (St. John) 2.00
Men on Bataan (Hersey) 2.50
Papuan Campaign ..... .50

Marines in Action

And A Few Marines (Thomason) 3.00
Betio Beachhead (Holcomb & Vandegrift) 2.50
The Island (Merrillat) 3.00
The Long and the Short and the Tall (Josephy) 3.00
Marines At War (Crane) 3.00
On To Westward (Sherrod) 3.00
A Ribbon and A Star (Monks & Falter) 2.75
Tarawa (Sherrod) 2.00
U. S. Marines on Iwo Jima (Five Marine Combat Fighters) ..... .25
Uncommon Valor (Six Marine Combat Correspondents) 3.00

Navy in Action

★America's Navy in World War II ..... .25
Battle Report—Pearl Harbor to the Coral Sea (Karig & Kelly) 3.50
Battle for Leyte Gulf (Woodward) 3.75
British Navy's Air Arm (Rutter) ..... .25
Carrier War (Jensen) 2.50
The Navy's Air War (Ed. by Buchanan) 3.50
The Navy's War (Pratt) 2.75
Queen of the Flat-tops (Johnston) 3.00
Robinson Crusoe, USN (Clark) 2.75
They Were Expendable (White)
Cloth edition 2.00
Fighting Forces edition ..... .25
This is the Navy (Cant) ..... .25

War Fiction

Adventures of Wesley Jackson (Saroyan) 2.75
A Walk in the Sun (Brown) 1.00
Beach Red (Bowman) 2.50
The Brick Foxhole (Brooks) 2.50
Night Climb (Skiing 10th Div.) 2.50
Spearhead (Abzug) 2.50
Word 20 (Bellah) 2.00

Unit Histories

Battle of Germany (84th Division) 5.00

EXPERIMENT IN REBELLION
By Clifford Dowdey

A behind-the-scenes story of the personalities, famous and otherwise, who figured in the Confederacy, during the American Civil War, and after it. $4.00.

Children of Yesterday (24th Division) 3.00
History of 2d Engineer Special Brigade 6.00
Marsmen In Burma (Randolph) 6.50
One Damned Island After Another (7th Air Force) 3.50
Report After Action (103d Infantry Division) 3.00
347th Infantry Pictorial Review 4.00
Thunderbolt Across Europe (83d Div.) 3.50
Timberwolf (104th Division) 4.00

BACKGROUND OF THE WAR AND PEACE

One World

Balance of Tomorrow (Strausz-Hupé) 3.50
The Ciano Diaries (Ciano) 4.00
Freedom: Its Meaning (Anshen) 4.00
Future of American Secret Intelligence (Pettee) 2.00
Geography of the Peace (Spykman) 2.75
Geopolitics (Strausz-Hupé) 2.75
The Great Globe Itself (Bullitt) 2.75
History of the World Since 1914 ..... 1.00
Human Nature and Enduring Peace (Murphy) 3.50
One World (Willkie) 2.00
Outline History of Europe, 1815 to 1944 ..... .75
Pillars of Peace (Army Information School) 1.00
Signposts of Experience (Snow) 2.75
Time for Decision (Welles) 3.00

America

America's Foreign Policies (Bailey) ..... .25
America's Strategy in World Politics (Spykman) 3.75
Under Cover (Carlson) 1.49
U. S. Foreign Policy (Lippmann) ..... .25
U. S. and Its Place in World Affairs (Nevins & Hacker) 3.25
U. S. War Aims (Lippmann) 1.50

Asia and the Pacific

East and West of Suez (Badeau) ..... [illegible]
Filipinos and Their Country (Porter) ..... [illegible]
Introduction to India (Moraes and Stimson) ..... [illegible]
Korea Looks Ahead (Grajdanzev) ..... [illegible]
The Making of Modern China (Lattimore)
Cloth edition ..... [illegible]
★Fighting Forces edition ..... [illegible]
Pacific Islands in War and Peace (Keesing) ..... [illegible]
Solution in Asia (Lattimore) ..... [illegible]
Wartime China (Stewart) ..... [illegible]

British Empire

A Roving Commission (Churchill) ..... [illegible]
East of Malta—West of Suez (Bartlmeus) ..... [illegible]
Empire in the Changing World (Hancock) ..... [illegible]
The English People (Brogan) ..... [illegible]
Introducing Australia (Grattan) ..... [illegible]
The Making of Modern Britain (Brebner) ..... [illegible]
New Zealand (Nash) ..... [illegible]
Pacific Partner (Johnston) ..... [illegible]
Report on India (Raman)
Cloth edition ..... [illegible]
★Fighting Forces edition ..... [illegible]

Europe

Balkan Background (Newman) ..... [illegible]
Europe: An Atlas of Human Geography (Rajchman) ..... [illegible]
Grave Diggers of France (Pertinax) ..... [illegible]
The Middle East (Ben-Horin) ..... [illegible]
The Netherlands (Edited by Bartholomew Landheer) ..... [illegible]
We Cannot Escape History (Whitaker)
Cloth edition ..... [illegible]
★Fighting Forces edition ..... [illegible]

Germany

Berlin Diary (Shirer) ..... [illegible]
The German Army (Rosinski) ..... [illegible]
The German Soldier (Goodfriend) ..... [illegible]
Guilt of the German Army (Fried) ..... [illegible]
Hitler's Second Army (Vagts)
Cloth edition ..... [illegible]
Fighting Forces edition ..... [illegible]
Last Days of Hitler (Trevor-Roper) ..... [illegible]
The Nazi State (Ebenstein)
Cloth edition ..... [illegible]
★Fighting Forces edition ..... [illegible]
Next Germany ..... [illegible]
Pattern of Conquest (Harsch) ..... [illegible]

Japan

History of Japan (Latourette) ..... [illegible]
Japan and the Japanese (from Fortune) ..... [illegible]
Japanese Handbook (Lee) ..... [illegible]
Japan's Islands of Mystery (Price) ..... [illegible]
Japan's Military Masters (Lory)
Cloth edition ..... [illegible]
★Fighting Forces edition ..... [illegible]
The Jap Soldier (Goodfriend) ..... [illegible]
Our Enemy Japan (Fleisher)
Cloth edition ..... [illegible]
★Fighting Forces edition ..... [illegible]
Through Japanese Eyes (Tolischus)
Cloth edition ..... [illegible]
★Fighting Forces edition ..... [illegible]
Traveler From Tokyo (Morris) ..... [illegible]
With Japan's Leaders (Moore) ..... [illegible]

USSR

Guide to the Soviet Union (Mandel) ..... [illegible]
Russia (Pares) ..... [illegible]
The Russian Army (Kerr)
Cloth edition ..... [illegible]
★Fighting Forces edition ..... [illegible]
Scared Men of the Kremlin (Fisher) ..... [illegible]
The Soviet Far East (Mandel) ..... [illegible]
Through the Russian Back Door (Lauderback) ..... [illegible]

Guidebooks and Atlases

Atlas of Global Geography (Raisz) ..... [illegible]
Atlas of World Affairs (1946) (paper) ..... [illegible]
Encyclopedia Britannica World Atlas ..... [illegible]
Latin America in Maps ..... [illegible]
Look at America ..... [illegible]
Look of the World (Harrison) ..... [illegible]
A War Atlas for Americans ..... [illegible]
Webster's Collegiate Dictionary ..... [illegible]

THE ARMY

The Mightiest Army

Pearl Report	.25
Our Armed Forces	.35
Soldier Poem (Lanham)	1.00
Story of West Point (Dupuy)	.25
West Point (Baumer)	3.00
West Point Today (Banning)	2.50

Air Forces

Army Flyer (Arnold & Eaker)	2.50
Flying Health (Kafka)	2.00

ALL BUT ME AND THEE
By Brig. Gen. Elliot D. Cooke

Here, reduced to terms the layman can understand, is the story of the problems presented by psychoneurosis in the Army. $2.75.

Guide to A.A.F.	
Cloth edition	2.50
Paper edition	.25
How Our Army Grew Wings (Chandler & Lahm)	3.75
100,000 Flyers (Wiener)	2.75
Winged Mars (Cuneo)	2.50
Winged Warfare (Arnold and Eaker)	3.00

Ground Forces

Army Ground Forces (What You Should Know About) (Greene)	2.50
We's in the Paratroops Now (Rathmore)	2.75
War on Wheels (Kutz)	2.00
We Jumped to Fight (Raff)	2.50

Service Forces

16-205: The Army Chaplain	.20
Signal Corps (What You Should Know About) (Davis & Fassett)	2.50
Wartime Medicine (What You Should Know About) (Darnall & Cooper)	2.50

THE NAVY

American Sea Power Since 1775 (Ed. by Allan Wescott)	5.00
Annapolis Today (Banning)	2.75
Book of the Navy (Roberts & Brentano)	3.00
Command at Sea (Cope)	2.75
Naval Officer's Guide (Forster & Cody)	3.50
Naval Reserve Guide (Forster & Cody)	2.50
Navy Has Wings (Pratt)	2.75
Secret Missions (Zacharias)	3.75
Toward a New Order of Sea Power (Sprout)	3.75

THE MARINE CORPS

Guidebook for Marines (Official)	1.00
History of the U.S.M.C. (Metcalf)	5.50
Our Marine Corps in World War II (Leatherneck)	4.50

MILITARY THOUGHT AND STRATEGY

Air Power and Total War (Caldwell)	2.50
Amphibious Warfare and Combined Operations (Keyes)	1.50
Arms and Policy (Nickerson)	3.50
Army of the Future (de Gaulle)	2.00
Art of War (Sun-Tzu)	1.50
Basic Grand Strategy (Compiled by Farago)	3.50
Defense (Von Leeb)	1.50
Blitzkrieg and Aerial Warfare (Sigaud)	1.75
Framework of Battle (Burr)	3.00
Frederick the Great (Phillips)	1.50
Fundamentals of Naval Warfare (Levert)	5.00
Future of Infantry (Hart)	1.00
Generals and Generalship (Wavell)	1.00
Guide to Naval Strategy (Brodie)	2.75
Impact of War (Herring)	2.50
Landing Operations (Vagts)	5.00
The Living Thoughts of Clausewitz	
★Fighting Forces edition	.25
MacArthur on War (MacArthur)	3.00
Makers of Modern Strategy (Earle)	3.75
Maneuver in War (Willoughby)	3.00
Military Staff: Its History and Development (Hittle)	2.50
Napoleon and Modern War (Lanza)	1.50
National Security and the General Staff (Nelson)	5.00
Nature of Modern Warfare (Falls)	1.25
On War (Clausewitz)	1.95
Principles of War (Clausewitz)	1.50
Reveries on the Art of War (De Saxe)	1.50
Roots of Strategy (Phillips)	3.00
Studies on War (Infantry Journal)	.25
Surprise in War (Erfurth)	1.50
There Will Be No Time (Borden)	2.50
Use of Air Power (Blunt)	2.00
War and National Policy (A syllabus)	1.00

MILITARY TRAINING

General

21-26: Advanced Map and Aerial Photo Reading	.25
21-510: Army Arithmetic	.20
Army Officer's Notebook (Morgan)	1.00
Cadence System of Close Order Drill (Lentz)	.75
27-250: Cases on Military Government	.20
Combat Communications (Allen)	.35
Combat First Aid	.25
Combat Intelligence (Schwien)	2.00
Combined FSR and SOFM (from 100-5, 100-10, and 100-15)	1.50
100-20: Command and Employment of Air Power	.20
Control of Venereal Disease (Vonderlehr and Heller)	2.75
21-30: Conventional Signs, Symbols, and Abbreviations (Military)	.25
21-40: Defense Against Chemical Attack	.35
Defense Against Chemical Warfare (Restricted)	.25
Drill and Evolutions of the Band (Reynolds)	1.50
Driver Training (McCloskey)	.25
21-25: Elementary Map and Aerial Photo Reading	.20
21-11: First Aid for Soldiers	.15
Front-Line Intelligence (Chandler and Robb)	2.50
Gas Warfare (Waitt)	
Cloth edition	2.75
★Fighting Forces edition	.25

THE MONASTERY
By Frederick Majdalany

The Infantryman's view of the taking of Cassino. $2.00.

Guerrilla Warfare (Levy)	.25
How to Abandon Ship (Banigan)	
Cloth edition	1.00
★Fighting Forces edition	.25
Identification (Insignia of all Armies)	2.50
21-15: Individual Clothing and Equipment	.20
New I. D. R., 1946	
Cloth edition	1.25
Paper edition	1.00
Insignia of the Services (Brown)	1.50
26-5: Interior Guard Duty	.10
Keep 'Em Rolling (McCloskey)	.50
Kill or Get Killed (Applegate)	2.50
Map and Aerial Photo Reading Complete	1.50
Map Reading for the Soldier (Goodfriend)	1.00
Medical Soldier's Handbook	1.00
27-5: Military Government	.15
Military Medical Manual	4.50
Military and Naval Recognition Book (Bunkley)	2.50
Military Preventive Medicine (Durham)	3.25
21-10: Military Sanitation and First Aid	.40
21-5: Military Training	.15
Officers' Guide	2.50
Officers' Manual (Moss)	2.50
100-5: Operations	.50
1-705: Physical Fitness for Flying	.25
35-20: Physical Training	.50
21-20: Physical Training	.30
Platoon Record Book	.50
Preventive Maintenance	1.00
Quartermaster Emergency Handbook	1.00
Riot Control (Wood)	2.00
Secret and Urgent (Pratt)	1.00
Sergeant Terry Bull	.25
21-35: Sketching	.20
101-5: SOFM Staff and Combat Orders	.25
Spies and Saboteurs (What the Citizen Should Know About) Irwin & Johnson)	2.50
Squad Record Book	.25
State Defense Force Manual	1.00
20-15: Tents and Tent Pitching	.20
21-22: Watermanship	.15

Infantry

Combat Problems for Small Units	1.00
Essentials of Infantry Training	
Cloth edition	2.00
Paper edition	1.50
7-25: Hq. Co., Intel., & Sig. Comm.	.15
Heavy Weapons Manual	2.50
Infantry Attacks (Rommel)	3.00
Infantry in Battle	3.00
72-20: Jungle Warfare	.25
Military Ski Manual (Harper)	2.00
3-375: Portable Flame Throwers M1 and M1A1	.20
Scouting and Patrolling	.25
21-75: Scouting, Patrolling and Sniping	.30
9-1535: Sights, M4 and M3 (For 60mm. and 81mm. Mortar Matériels) Sights M2A3, M2A1, M2 (81mm. Mortar)	.10
11-431: Target Range Communication Systems	.10

Air Forces

Roger Wilco: ABC of Radio for Flyers	2.50
5-240: Aerial Photography	.30
Aircraft Mathematics (Walling and Hill)	1.75
Aircraft Navigation (Sewart, Nichols, Walling, Hill)	2.00
Aircraft Recognition (Saville-Sneath)	.25
Air Navigation (Zim)	3.00
Attitude (Lederer)	.25
Basic Math for Aviation (Ayres)	3.25
Bombardment Aviation (Ayling)	2.50
Celestial Navigation (A.W.T.I.)	1.00
Codes and Ciphers (Morgan)	.60
Combat Aviation (Ayling)	2.50
Electrical Principles (Stone)	1.25
Electrical Shop (Stone)	.40
Elements of Aeronautics (Pope & Ellis)	3.75
Engine Principles (Etchison)	1.75
Flight Crew Training Program (A.W.T.I.)	.25
Flight Principles (Crites)	.60
Hydraulic Principles (Etchison)	1.00
Instructor's Manual (Morgan)	.25
Jordanoff's Illustrated Aviation Dictionary	3.50
Loading and Cruising (Ford)	1.00
1-900: Mathematics for Air Crew Trainees	.25
Mechanical Principles (Crites)	.60
Mechanics Handbook (A.W.T.I.)	.60
Navigation Principles (Blackburn)	1.75
Northern Routes (A.W.T.I.)	.25
Of Instruments and Things (Straith)	.25
Pilot's T.M. (Speas)	1.50
Radio Operating (Stone)	.60
Radio Principles (Stone)	1.00
Refueling the Airplane (Thomas)	.25
Stock Clerk's Manual (Brock)	1.00

ATLAS OF WORLD AFFAIRS
By Clifford MacFadden, Henry Madison Kendall and George F. Deasy

An up-to-the-minute study of world affairs in maps and pictographs, covering the economic, military, and political potentialities of every country in the world. Two of the authors served with the Army Map Service during the war. (paper) 2.75.

Take 'er Up Alone, Mister (Tibbits)	2.50
Use of Numbers (Morgan)	.60
Weather Principles (Kraght)	1.00

Armored Forces

17-5: Armored Force Drill	.15
17-27: Armored 81mm. Mortar Squad and Plat.	.20
17-42: Armored Infantry Battalion	.25
17-40: Armored Infantry Company	.30
Armored Warfare (Lectures on FSR III) (Fuller)	1.50
2-7: Cavalry Drill Regulations, Mechanized	.15
2-20: Cavalry Recon. Troop, Mechanized	.25

2-15: Employment of Cavalry ..... .30
17-50: Logistics ..... .20
Machine Warfare (Fuller)
Cloth edition 2.50
★Fighting Forces edition ..... .25
Modern Reconnaissance (Cavalry Journal) 1.50
9-1250: Ord. Maint.: 37mm. Gun Matériel (Tank) M5 and M6 ..... .10
2-30: Recon. Squadron, Mechanized ..... .20
18-20: Tact. Employment of T.D. Plat. Self-Prop. .15
18-5: Tact. Employ. Tank Destroyer Unit ..... .25

FRONT-LINE INTELLIGENCE
By Chandler and Robb

The complete and compendious handbook on the collection, evaluation, dissemination of combat intelligence. $2.50.

18-24: TD Pioneer Platoon ..... .15
18-22: TD Recon. Platoon ..... .15
Tank Fighter Team (Gerard) ..... .25
Tanks (Icks) 4.75

Artillery

9-1580: Battery Commander's Telescope M1917 A1 ..... .10
Drills and Ceremonies of F.A. (Official) 1.00
4-119: Examination for Gunners ..... .10
Field Artillery Basic (Official) 5.00
6-5: FAFM: Org. and Drill ..... .15
6-56: FAFM Serv. of Piece 75mm. Gun M2A3 .. .15
6-220: F.A. Fire Control Instruments ..... .15
6-605: F.A. Individual and Unit Training Standards ..... .20
6-225: F.A. Trainer ..... .10
6-135: Forward Observation ..... .15
Hard Pounding (Court) 2.50
20-230: Log. Trig. and Math Tables for Arty. . .25
44-225: Orientation for Artillery ..... .40
6-110: Pack Artillery ..... .30
9-1570: Plotting Boards for C.A. ..... .20
9-1569: Plotting Boards for F.A. ..... .10
4-245: Pres. and Care of Seacoast Defense Matériel ..... .10
Seacoast Artillery 3.00
6-91: Serv. of Piece, 8" Howitzer, M1 ..... .15
6-70: Serv. of Piece: 75mm. Howitzer, Horse and Truck-Drawn ..... .10
6-60: Serv. of Piece, 75mm. Gun, M1916 Horse and Truck Drawn ..... .15
6-90: Service of 155mm. Gun M1 ..... .15
6-85: Serv. of Piece, 155mm. Gun, M1918 ..... .15
6-80: Serv. of Piece, 155mm. Howitzer, M-1918A1, truck-drawn ..... .10
6-20: Tactical Employment of F.A. ..... .30
6-100: T & T of Div. Arty and Higher Arty Ech .15

Engineers

5-10: Engr. FM Construction and Routes of Communication ..... .75
5-25: Engr. FM Explosives and Demolitions ..... .30
5-15: Engr. FM Field Fortifications ..... .35
5-6: Engr. FM Oper. of Engr. Field Units ..... .20
5-35: Engr. FM Reference Data ..... .25
5-5: Engr. FM Troops and Operations ..... .45
21-105: Engr. Soldiers Handbook ..... .20
Engineer Training Notebook (Official) ..... .50
5-315: Fire Protection by Troop Org. in T/O ... .30
5-296: Ground Water Supply for Mil. Oper. .. .15
5-271: Light Stream-Crossing Equipage ..... .20
8-220: Medical Dept. Soldiers Handbook ..... .75
5-475: Military Diving ..... .15
5-350: Military Pipeline System ..... .40
5-310: Military Protective Constr. Against Air Attack ..... .20
5-275: Pneumatic Pontoon Bridge M3 ..... .15
5-274: Portable Steel Highway Bridges H-10 and H-20 ..... .15
5-272: Steel Treadway Bridge Equipage M2 ..... .15
5-236: Surveying Tables ..... .40
5-230: Topographic Drafting 1.00
8-285: Treatment of Casualties from Chemical Agents ..... .15
5-273: 25-ton Pontoon Bridge Model 1940 ..... .30
5-295: Water Supply and Water Purification .... .55
5-297: Well-Drilling ..... .35

Psychology and Leadership

All But Me and Thee (Cooke) 2.75
Educational Psychology (Pintner, Ryan, West, Crow, Smith) ..... .75
Fear in Battle (Dollard) ..... .25
Leadership for American Army Leaders (Munson) .25
Management and Morale (Roethlisberger) 2.50
Peace of Mind (Liebman) 2.50
Psychiatry in War (Mira) 2.75
Psychology for the Armed Services (Edited by Boring) 4.00
Psychology for the Fighting Man
Cloth edition 1.50
Paper edition ..... .25
Psychology for the Returning Serviceman ..... .25
Psychology and the Soldier (Copeland) 2.00
The Second Forty Years (Stieglitz) 2.95

Weapons and Weapon Training

Ammunition (Johnson & Haven) 5.00
9-1900: Ammunition, General ..... .25
Armament and History (Fuller) 2.50
23-35: Auto. Pistol Cal. .45 M1911 and M1911A1 .35
Automatic Weapons of the World 7.50
23-25: Bayonet ..... .10
Book of the Springfield (Rossman) 4.00
23-55: Browning M.G. Cal. 30 ..... .50
9-226: Browning M.G. Caliber .50 M2, Watercooled and mounts ..... .15
23-65: Browning M.G. Cal. 50, Hb, M2 ..... .25
For Permanent Victory (Johnson & Haven) 2.50
Fred Ness's Book of the .22 ..... 4.00
Gun Care and Repair (Chapel) 3.75
How to Shoot the U. S. Army Rifle ..... .25
Machine Gunner's Handbook (Coates) ..... .50

MR. ADAM
By Pat Frank

Satire on the astounding potentialities of the Atomic Age. $2.50.

Mauser Pistols (Smith) 5.00
9-2900: Military Explosives ..... .20
Military Small Arms (Smith) 5.00
Military and Sporting Rifle Shooting (Crossman) 4.50
NRA Book of Small Arms (Smith) 10.00
9-10: Ordnance Field Maintenance ..... .30
Ordnance Field Guide, Vol. I (Restricted) 2.50
Ordnance Field Guide, Vol. II (Restricted) 2.50
Ordnance Field Guide, Vol. III (Restricted) 2.50
9-5: Ordnance Field Manual ..... .15
9-1215: Ord. Maint: Thompson Submachine Gun, Cal. 45, M1928A1 ..... .10
Rifles and Machine Guns of the World's Armies (Johnson)
Cloth edition 5.00
★Fighting Forces edition ..... .25
9-1990: Small Arms Ammunition ..... .15
Story of Weapons and Tactics (Wintringham) . 2.25
23-40: Thompson Submachine Gun, Cal. 45 M1928A1 ..... .15
23-10: U. S. Rifle Caliber 30, M1903 ..... .25
23-6: U. S. Rifle Caliber 30, M1917 ..... .45
Walther Pistols (Smith) 2.00
Weapons for the Future (Johnson & Haven) .... .25

MILITARY ADMINISTRATION

12-250: Administration ..... .50
100-10: Administration ..... .20
Administration of the Army (Official) ..... .10
12-220: Administration: The Division and Larger Installations ..... .20
12-255: Administration Procedure ..... .30
14-904: Accounting for Lost, Damaged, and Stolen Property ..... .30
14-210: Accounting for Public Funds ..... .45
12-252: The Army Clerk ..... .40
Army Food and Messing 3.00
14-509: Army Pay Tables ..... .20
Army Personnel System (Official) ..... .10
Army Writer (Klein) 2.50
Articles of War (Tillotson) 3.00
Battery Duties ..... .25
Company Duties ..... .25
12-250: Correspondence (with supp.) ..... .25
Court-Martial Practical Guide (McCarthy) 1.00
14-502: Enlisted Men's Pay and Allowances ... .25
12-235: Enlisted Pers: Discharge and Release from Active Duty ..... .20
12-238: Enlisted Personnel Retirement ..... .15
Fourth Horseman (Doherty) 1.00
General and Special Staffs (Official) ..... .10
Handbook to A.R. (Scudla) 2.00
Index to A.R. (Official) ..... .60
Lawful Action of State Mil. Forces (Holland)
Cloth edition 3.00
Paper edition 1.50
Manual for Courts-Martial 1.00
Military Correspondence: A Checklist ..... .25
Military Justice for the Field Soldier (Wiener) 1.00
Occupation of Enemy Territory (Public Opinion Quarterly) 1.25
14-501: Officer's Pay and Allowances ..... .25
Orders (Official) ..... .50
Practical Manual of Martial Law (Wiener) 2.50
12-236: Preparation of Separation Forms ..... .15
14-1010: Property Auditing Procedures ..... .15
27-10: Rules of Land Warfare ..... .30
12-230: Service Record ..... .25
The Soldier and His Family 2.00
Soldier and the Law (McCamsey & Edwards) .. 2.50
S.O.P. for A Regimental Adjutant ..... .10
So You're Going Overseas (Barker) ..... .25
14-503: Travel Allowances and W.D. Personnel .25
27-251: Treaties Governing Land Warfare .... .30

MILITARY HISTORY
War Through the Ages

Alexander of Macedon (Lamb) 3.50
Fifteen Decisive Battles (Creasey) 4.00
Genghis Khan (Lamb) ..... .25
Indian-Fighting Army (Downey) 3.50
Masters of Mobile Warfare (Colby) 2.00
Military Institutions of the Romans (Vegetius) 1.50
Modern War (What the Citizen Should Know About) (Pratt) 2.50
175 Battles (Show & Vestal) 2.50
Short History of the Army and Navy (Pratt) .... .35
Warfare (Spaulding, Wright, Nickerson) 5.00
War Through the Ages (Montross) 5.00
World Military History, Outline of (Mitchell) .. 3.50

Early American Wars

America in Arms (Palmer) ..... .25
History of the U. S. Army (Ganoe) 5.00
I Fought With Custer (Hunt) 3.00
Patriot Battles (Azoy) ..... .25
The Perilous Fight (Swanson) 3.50
Soldiers in the Philippines (Sexton) ..... .25
Story of the Little Big Horn (Graham) 2.00
They Were Not Afraid to Die (Azoy) 2.00
U. S. Army in War and Peace (Spaulding) 6.00
War of 1812 (Adams) 3.00

BRERETON DIARIES
By Lt. Gen. Lewis H. Brereton

A top-ranking air commander writes of his experiences in global warfare. $4.00.

Civil War

Abraham Lincoln and the Fifth Column (Milton)
Cloth edition 3.75
Fighting Forces edition ..... .25
Conflict (Milton)
Cloth edition 3.50
★Fighting Forces edition ..... .25
Experiment In Rebellion (Dowdey) 4.00
Lee's Lieutenants (Freeman) 3 volumes, each ... 5.00
Letters From Lee's Army (Blackford) 3.50

...ain the President (Randall), 2 vols. 7.50
...emoirs of a Volunteer (Beatty) 3.50
...ife in Washington (Leech) 3.75
...ennwall Jackson (Henderson) 5.00
...trategy in the Civil War (Deaderick) 2.50
...ouched With Fire (Howe) 3.00
...olunteer's Adventures (DeForest) 3.00
...our Years With Jeb Stewart (Blackford) 3.00

World War I

Americans vs. Germans (By American Soldiers) .25
Fighting Tanks 1916-32 (Jones, Raney, Icks) ... 2.50

LEE'S LIEUTENANTS
By Douglas S. Freeman

The definitive three-volume study of Lee's Army and his officers in the Civil War. $5.00 per volume.

Great Soldiers of the First World War (DeWeerd) .25
The Lost Battalion (Johnson and Pratt) ..... .25
Report on Demobilization (Mock & Thurber) .. 3.00
With Pershing in Mexico (Toulmin) 2.00

BIOGRAPHIES

An American Doctor's Odyssey (Heiser) 3.50
Great Soldiers of the Second World War (DeWeerd) 3.75
John J. Pershing—My Friend and Classmate (Andrews) 2.00
Madame Curie (Eve Curie) 1.00
Mathias: Educator of an Army (Kahn) 2.00
Soldier of Democracy: Eisenhower (Davis) 3.50

AMERICAN HISTORY AND CIVICS

American Constitutional History (Eriksson) 4.25
The Conquest of the Missouri (Hanson) 3.50
Flags of America (Waldron) 1.00
General American Government ..... .75
History as the Story of Liberty (Croce) 3.75
History of Latin America (Wilgus) 1.25
History of the U. S. Since 1865 ..... .75
History of the U. S. to 1865 ..... .75
Look at Latin America (Raushenbush) ..... .25
Mexico: Making of a Nation (Herring) ..... .25
Our American Neighbors 3.00
Pocket History of the U. S. (Commager and Nevin) ..... .25
Short History of American Democracy (Hicks) .. 5.50
Topical Survey of American History (Stockton) . 1.00
Use of Presidential Power (Milton) 3.00

History—General

Ancient History (Hyma) ..... .75
Ancient, Medieval and Modern History (Rickard & Hyma) 1.00
History of England ..... .75
History of Europe 1500-1848 ..... .75
History of the Middle Ages ..... .75

THE ATOMIC AGE

The Absolute Weapon: Atomic Power & World Order (Brodie) 2.00
Atomic Energy (Smyth) 1.25
Down Over Zero (Laurence) 3.00
Must Destruction Be Our Destiny (Brown) 2.00
Mechanics (U. S. Navy) 1.00
One World or None (American Scientists) 1.00
Operation Crossroads (Official Photos) 2.00
Our Atomic World (Los Alamos scientists) ..... .50
Report on International Control of Atomic Energy .35

SCIENCE

★Animals of the Pacific World ..... .25
1-250: Applied Physics for Airplane Mechanics . .15
1-240: Arctic Manual ..... .25
Arctic Manual (Stefansson) 3.00
1-232: Basic Weather for Pilot Trainees ..... .35
Birds of the Philippines 3.75
Cryptography (Smith) 3.00
1-231: Elementary Weather for Pilot Trainees .. .10
First Year College Chemistry (Lewis) 1.00
First Year College Physics ..... .75
Fishes and Shells of the Pacific World (Nichols and Bartsch)
  Cloth edition 2.50
  ★Fighting Forces edition ..... .25
General Forestry (Stockton) 1.00
Handbook of Elementary Physics (Lindsay) 2.40
How to Live in the Tropics (Hunt) 2.00
How to Use Your Eyes at Night ..... .10
Insects of the Pacific World (Curran)
  Cloth edition 3.75
  ★Fighting Forces edition ..... .25
Mammals of the Pacific World 3.00
8-280 Military Roentgenology 2.00
Native Peoples of the Pacific World (Keesing)
  Cloth edition 3.00
  ★Fighting Forces edition ..... .25
Navigation (Kingsland & Seager) 1.00
Navigation for Mariners and Aviators (Falowe) 5.00
Organic Chemistry (Degering) 1.25
Pacific Ocean Handbook (Mears) 1.00
The Pacific World (Osborn)
  Cloth edition 3.50
  ★Fighting Forces edition ..... .50
11-409: Photographic Laboratories ..... .10
Plant Life of the Pacific World (Merrill)
  Cloth edition 3.50
  ★Fighting Forces edition ..... .25
Primer of Celestial Navigation (Favill) 2.00
★Reptiles of the Pacific World (Loveridge) ..... .25
Rockets (Ley) 3.50
Rockets and Jets (Zim) 3.00
Science at War (Gray) 3.00
Survival
  Cloth edition 1.50
  Fighting Forces edition ..... .25
Thermodynamics (Winston) 1.50
Treasury of Science (Edited by H. Shapley) 3.95

WALTHER PISTOLS
By W. H. B. Smith

Pictures, drawings and text on the operation, stripping, and ammunition for every model Walther Pistol. $2.00.

1-230: Weather Manual for Pilots ..... .40
What to Do Aboard a Transport (Group of Scientists)
  Cloth edition 1.50
  Fighting Forces edition ..... .25

LANGUAGE BOOKS

Army Talk (Colby) 2.00
Blitz French (Nicot) ..... .75
Blitz German (Brandt) ..... .75
Civil and Military German (Peffer) 2.50
Current Spanish (Martinez) 1.00
Easy Malay Words and Phrases (Mendlesen) .. 1.00
Elementary Chinese Reader (Chen) 2.25
Elementary Japanese (Sullivan)
  Cloth edition 2.50
  ★Fighting Forces edition 1.00
English for the Armed Forces (Cook & Trevethick) 1.50
French Dictionary for the Soldier (Henius) .... .50
French Grammar (Du Mont) 1.00
German Dictionary for the Soldier (Henius) .... .50
German Grammar (Greenfield) ..... .75
How to Say It in Spanish ..... .75
Invitation to French (Madrigal & Launay) 1.75
Invitation to Spanish (Madrigal & Madrigal) .. 1.75
Italian Dictionary for the Soldier (Henius) .... .50
Italian-English—English-Italian Dictionary (Wessely) 1.25
Italian Sentence Book (Henius) ..... .25
The Loom of Language (Bodmer) 3.75
30-257: Military Dictionary English-Portuguese... .45
30-250: Military Dictionary Spanish-English .... .50
Modern Military Dictionary (Barber & Bond) .. 2.50
Pocket Dictionary ..... .25
Spanish Dictionary (Henius) 1.00
Spanish Dictionary for the Soldier (Henius) .... .50
Spanish Grammar (Greenfield) 1.00
Speech for the Military (Brembeck & Rights) .. 1.20

SPORTS AND RECREATION

Baseball (Jessee) 1.25
Basketball (Murphy) 1.25
Big Game Hunting (Whelen) Boxed Set 8.00
  Vol. I—In Africa & Asia 4.00
  Vol. II—In America 4.00
Boxing (Haislet) 1.25
Fishing Guide (Voigt) 1.00
Fishing: Lake and Stream (Schrenkeisen) 2.00
Football Rules (Official) ..... .30
Fresh Water Fishing (Shoemaker) 3.00
Golf After Forty (Hattstrom) 2.00
How to Hunt American Game (Vale) 4.00
How to Play Golf (Snead) 2.00
21-221: Informal Games for Soldiers ..... .15
Little Red Book of Baseball ..... .75
North American Game Fishes (LaMonte) 3.00
Official Baseball Guide ..... .50
Official Basketball Guide ..... .50
Official Bowling Guide ..... .50
Official Boxing Guide ..... .50
Official Tennis Guide (1946) ..... .50
Official Track and Field Guide (Wilson) ..... .50
Official Volley Ball Guide (Fisher) ..... .50
Oswald Jacoby on Poker 1.50
Scarne on Dice (Revised) 4.00
Softball (Noren) 1.25
28-325: Soldier Handicrafts ..... .45
21-220: Sports and Games ..... .25
Sports as Taught and Played at West Point (Baumer) 2.00
Touch Football (Grombach) 1.25
Volley Ball (Laveaga) 1.25
Why You Lose at Bridge (Simon) 2.00
Wrestling (Gallagher) 1.25
You Must Be Fit
  Cloth edition 1.00
  Paper edition ..... .50

ANTHOLOGIES, READERS AND HUMOR

Army Life (Kahn)
  Cloth edition 1.75
  Fighting Forces edition ..... .25
★As You Were (Woollcott) 1.00
At Ease (Leopold) 1.75
Best From Yank 1.98
The Best of Don Marquis 3.00
Book of War Letters (Maule) 2.00
c/o Postmaster (St. George) 1.00
Cartoons for Fighters (Brandt) ..... .25
Cartoons by George Price ..... .25
Century's Poetry, Volume I ..... .25
Century's Poetry, Volume II ..... .25
Complete Murder Sampler (Nelson) 2.50
Desert Island Decameron (Smith) 2.50
Drawn and Quartered (Adams) ..... .25
Freedom Speaks (Reynolds & Connors)
  Cloth edition 2.00
  ★Fighting Forces edition ..... .25
GI Sketchbook (GI Art) ..... .25
G.I.'ve Been Around 1.50
The Hard-boiled Omnibus (Shaw) 3.00
I Never Left Home (Hope) 1.00
Infantry Journal Reader (Edited by Col. Greene) 3.00
Keep It Crisp (Perelman) 2.50
Life With Father (Day) 1.00
Long Long Ago (Woollcott) ..... .25

ARSENAL OF DEMOCRACY
By Donald Nelson

The story of American production in wartime. $4.00.

Mole Call (Caniff) 1.00
Marine Corps Reader (Metcalf) 3.00
Men at War (Hemingway) 3.00
Men, Women and Dogs (Thurber) ..... .25
Mixture for Men (Feldkamp) 2.50
Modern American Poetry (Untermeyer) 3.75
My Dear Bella (Kober) ..... .25
New Sad Sack (Baker) 2.00
Our Soldiers Speak (Matthews and Wecter) .. 3.50
Patriotic Anthology (American Writings) 3.00
Penguin New Writing No. 2 ..... .25

Penguin New Writing No. 10 ..... .25
Pocket Book of War Humor (Edited by Cerf) .... .25
The Sad Sack (Baker) 2.00
Second Navy Reader 3.75
Situation Normal (Miller) 2.00
So This Is Peace (Hope)
Cloth 2.50
Paper 1.00
Soldier Art ..... .25
Soldier Reader (Macy) 2.95
Sound Off (Dolph) 3.50
Stag's Hornbook (Edited by McClure & Benét) . 2.00

SAIGON SINGER
By Van Wyck Mason

A novel of cloak-and-dagger operations in the Orient. $2.50.

Steinbeck's Anthology 2.00
★Thesaurus of Humor (Meiers & Knapp) ..... .25
Three Smiths in the Wind (Smith) 2.75
A Treasury of American Folklore (Edited by Botkin) 3.00
A Treasury of Laughter (Edited by Untermeyer).. 3.95
Twin Bedside Anthology 5.00
The Wolf (Sansone) 1.00

THE VETERAN

Government Jobs and How to Get Them (Spero) 2.95
Veteran Comes Back (Waller) 2.75
Veteran's Rights and Benefits (Eraña & Symons) 1.00

GUIDES FOR SELF STUDY

Housing and Building

Building Insulation (Close) 4.50
Building Trades Blueprint Reading, Part I (Dalzell) 2.25
Building Trades Blueprint Reading, Part II (Dolzell) 2.25
Answers to Building Trades Blueprint Reading—No Charge with Set.
Carpentry (Townsend) 2.50
Concrete Design and Construction (Gibson & Webb) 5.00
Home Ownership (Deane) 2.50
How to Design and Install Plumbing (Matthias, Jr.) 3.50
How to Estimate for Building Trade (Townsend, Dalzell, McKinney) 5.50
How to Plan a House (Townsend & Dalzell) ... 5.00
How to Remodel a House (Dalzell & Townsend) 5.00
If You Want To Build A House 2.00
Interior Electric Wiring and Estimating (Uhl, Nelson, Dunlap) 2.75
Painting and Decorating (Dalzell & Sabin) 1.50
10-450: Sheet Metal Worker ..... .20
Stair Building (Townsend) 2.50
Steel Construction (Sandberg) 4.25
Steel Squares (Townsend) 1.25
The Story of Architecture in America (Tallmadge) 4.50
Tomorrow's House (Nelson & Wright) 3.00
Use of Tools 3.50

Business

Bookkeeping for Personal and Business Use (Cradit) 2.25
Business Law (Babb & Martin) 1.25
Effective Retail Selling (Baker) 2.50
Everyday Problems in Economics (Wood & Simons) 4.00
Fundamental Business Law (Christ) 3.00
How You Can Get a Better Job (Lasher & Richards) 2.00
How to Write Better Business Letters (Fraley) .. 2.25
Modern Practical Accounting—Elementary (Saliers) 3.50
Production Management (Simons & Dutton) 4.00

Diesel

Diesel Engines—Operation and Maintenance (Morrison) 2.50
Diesel Engines—Theory and Design (Degler) .. 3.00
Diesel Electric Plants (Kates) 3.75
Diesel Locomotive—Electrical Equipment (Droney) 4.00
Diesel Locomotive—Mechanical Equipment (Droney) 4.50
Diesel and Other Internal Combustion Engines (Degler) 2.50
High Speed Diesel Engine (Morrison) 2.50

Drafting

Freehand and Perspective Drawing (Everett & Lawrence) 1.50
1-1050: Fundamentals of Mechanical Drawing .. .15
Mechanical Drawing (Kenison, McKinney, Plumridge) 2.50
Mechanical Drawing Workbook (McKinney, Plumridge, Burke) 2.75

Electrical

1-470: Aircraft Radio Shop Practice ..... .20
Electrical and Radio Dictionary (Gorder, Dunlap, Haan) 1.00
Elements of Radio (Marcus) 4.00
Fundamentals of Electricity (McDougal, Ranson, Dunlap) 3.00
Fundamentals of Electricity (Mott-Smith) ..... .25
Fundamentals of Electricity—Workbook (McDougal, Ranson, Dunlap) ..... .75
Fundamentals of Radio (Gorder, Hathaway, Dunlap) 3.00
Fundamentals of Radio—Workbook (Gorder, Hathoway, Dunlap) ..... .75
11-453: Shop Work ..... .20

Mathematics and Mechanics

Math For All ..... .50
Math for General Chemistry (Frey) ..... .75
Mathematics For the Million (Hogben) 4.50
Mathematics Refresher (Hooper) 2.50

THE SECOND FORTY YEARS
By Dr. Edward J. Stieglitz

First-echelon maintenance for body and mind. $2.95.

Military Application of Mathematics (Hanson).. 3.00
Plane Trig Made Plain (Carson) 3.00
Practical Mathematics (Hobbs, McKinney and Dalzell) 2.75
Slide Rule ..... .50
Slide Rule Simplified With Rule (Harris) 4.00
Wartime Refresher in Fundamental Mathematics (Eddy & Upton) 1.40

Machines and Metal Working

Fundamentals of Machines (Hobbs, Kuns, Morrison) 2.50
Fundamentals of Mechanics (Mott-Smith & Van de Water) ..... .25
1-422: Grinding Machines ..... .15
1-423: Heat Treating and Inspection of Metals .. .10
1-420: Lathes ..... .15
Machine Design (Winston) 3.50
10-445: The Machinist ..... .25
Metallurgy (Johnson) 2.50
1-421: Milling Machines, Shapers, Planers ..... .30
Tool Design (Cole) 4.50
Tool Making (Cole) 4.00
1-430: Welding ..... .30

Miscellaneous

Atlas of Human Anatomy (Frohse, Brodel, Schlossberg) 1.50
Auto Fundamentals—Chassis and Power Transmission (Kuns) 4.75
Auto Ignition and Electrical Equipment (Kuns) 4.25
Automobile Engines (Kuns) 4.75
Automobile Maintenance (Kuns) 4.75
Best Methods of Study (Smith & Littlefield) .... .60
Everyday Law Guide (Ruben) ..... .50
Modern Criminal Investigation (Soderman & O'Connell) 3.50
Knots and Rope 2.00
Plastics (Du Bois) 5.00
Survey of Journalism (Mott & others) 1.00

TWO-BIT BOOKS

Non-Fiction

Birth and Death of the Sun ..... .25
Christianity and the Social Order (Temple) ... .25
Conceived in Liberty (Fast) ..... .25
Dark Invader (Von Rintenlen) ..... .25
The Great Mouthpiece (Fowler) ..... .25
The Last Time I Saw Paris (Paul) ..... .25
Life on the Mississippi (Twain) ..... .25
McSorley's Wonderful Saloon (Mitchell) ..... .25
Meet Me in St. Louis (Benson) ..... .25
Natural History of Selborne ..... .25
Night Flight (St. Exupery) ..... .25
Oil for the Lamps of China (Hobart) ..... .25
One Foot in Heaven (Spence) ..... .25
Physiology of Sex (Walker) ..... .25
Public Opinion (Lippmann) ..... .25
Saki Sampler (Munro) ..... .25
Shipyard Diary of a Woman Welder ..... .25
Citizen Tom Paine (Fast) ..... .25
Wind, Sand and Stars (St. Exupery) ..... .25

Fiction

Appointment in Samarra (O'Hara) ..... .25
April Afternoon (Wylie) ..... .25
Babbitt (Lewis) ..... .25
Bell for Adano (Hersey) ..... .25
Belt of Suspicion (Wakefield) ..... .25
Boomerang (Chambliss) ..... .25
Embarrassment of Riches (Fischer) ..... .25
Family Affair (Schriber) ..... .25
Gift Horse (Gruber) ..... .25
Good Soldier Schwaik (Hasek) ..... .25
Grapes of Wrath (Steinbeck) ..... .25
The Great Gatsby (Fitzgerald) ..... .25
★The Gun (Forester) ..... .25
Home Ranch (Will James) ..... .25
The Three Hostages ..... .25
The Informer (O'Flaherty) ..... .25
The Laughing Fox ..... .25
Laughter of My Father (Bulosan) ..... .25
Lovely Lady ..... .25
Love Nest (Lardner) ..... .25
Maigret Travels South (Simenon) ..... .25
Mighty Blockhead (Gruber) ..... .25
Ministry of Fear (Greene) ..... .25
Mr. and Mrs. Cugat (Rorick) ..... .25
Nevada (Zane Grey) ..... .25
Night in Bombay (Bromfield) ..... .25
Ol' Man Adam and His Chillun (Bradford) .... .25
One More Spring (Nathan) ..... .25
Only Yesterday (Allen) ..... .25
Pal Joey ..... .25
Passage to India ..... .25
Porgy (Heyward) ..... .25
★Rifleman Dodd (Forester) ..... .25
Seventeen (Tarkington) ..... .25
South Moon Under (Rawlings) ..... .25
Storm (Stewart) ..... .25
Trouble in July (Caldwell) ..... .25
Turning Wheels ..... .25
Valiant Is the Word For Carrie (Benefield) ... .25
What Makes Sammy Run (Schulberg) ..... .25
White Magic (Baldwin) ..... .25
Young Man With a Horn (Baker) ..... .25

MODERN LIBRARY

Adventures and Memoirs of Sherlock Holmes (Doyle) 1.10
African Queen (Forester) 1.10
Alice in Wonderland (Carroll) 1.10
Anna Karenina (Tolstoy) 1.10
Anthology of American Negro Literature 1.10
Anthology of Light Verse 1.10
Anthology of Modern Poetry 1.10
Antic Hay (Huxley) 1.10
Aphrodite (Louys) 1.10
Arabian Nights (Burton) 1.10
Arrowsmith (Lewis) 1.10
Autobiography of Benjamin Franklin 1.10
Autobiography of Benvenuto Cellini 1.10
Babbitt (Lewis) 1.10
Barchester Towers (Trollope) 1.10
Barren Ground (Glascow) 1.10
Best American Humorous Short Stories 1.10
Best Ghost Stories 1.10
Best Russian Short Stories 1.10
Best Short Stories of O. Henry 1.10
Best Stories of De Maupassant 1.10

Best Tales of Poe 1.10
Brothers Karamazov (Dostoyevsky) 1.10
Candide (Voltaire) 1.10
Canterbury Tales (Chaucer) 1.10
Casuals of the Sea (McFee) 1.10
Cloister and the Hearth (Reade) 1.10
Collected Poetry of Dorothy Parker 1.10
Collected Stories of Dorothy Parker 1.10
Collected Stories of Ring Lardner 1.10
The Compleat Angler (Walton) 1.10
Complete Anthology of American Verse (Aiken). 1.10
Counterfeiters (Gide) 1.10
Crime and Punishment (Dostoyevsky) 1.10
Cyrano de Bergerac (Rostand) 1.10
Dance of Life (Ellis) 1.10
Daring Young Man on Flying Trapeze (Saroyan) 1.10
David Copperfield (Dickens) 1.10
Dead Souls (Gogol) 1.10
Decameron (Boccacio) 1.10
Deepening Stream (Canfield) 1.10
Disraeli (Maurois) 1.10
Divine Comedy (Dante) 1.10
Dorian Gray (Wilde) 1.10
Dracula (Stoker) 1.10
Droll Stories (Balzac) 1.10
Dubliners (Joyce) 1.10
Education of Henry Adams (Adams) 1.10
Emperor Jones (O'Neill) 1.10
The Enormous Room (Cummings) 1.10
Farewell to Arms (Hemingway) 1.10
Fathers and Sons (Turgenev) 1.10
Faust (Goethe) 1.10
Five Great Modern Irish Plays 1.10
Flowering Judas (Porter) 1.10
Four Famous Greek Plays 1.10
Four Plays of Lillian Hellman 1.10
Garden Party (Mansfield) 1.10
God's Little Acre (Caldwell) 1.10
Golden Treasury (Palgrave) 1.10
The Good Earth (Buck) 1.10
Grapes of Wrath (Steinbeck) 1.10
Great Modern Short Stories 1.10
Great Tales of the American West 1.10
Green Mansions (Hudson) 1.10
Growth of the Soil (Hamsun) 1.10
Gulliver's Travels (Swift) 1.10
Henry Esmond (Thackeray) 1.10
High Wind in Jamaica (Hughes) 1.10
Homer's Odyssey 1.10
Hunchback of Notre Dame (Hugo) 1.10
I, Claudius (Graves) 1.10
The Iliad (Homer) 1.10
In Dubious Battle (Steinbeck) 1.10
Jane Eyre (Brontë) 1.10
Jude the Obscure (Hardy) 1.10
Late George Apley (Marquand) 1.10
Leaves of Grass (Whitman) 1.10
Life and Death of a Spanish Town (Paul) 1.10
Life With Father (Day) 1.10
Life and Writings of Jefferson 1.10
Long Voyage Home (O'Neill) 1.10
Looking Backward (Bellamy) 1.10
Lord Jim (Conrad) 1.10
Lust For Life (Stone) 1.10
Madame Bovary (Flaubert) 1.10
Making of Man: Outline of Anthropology 1.10
Making of Society 1.10
Maltese Falcon (Hammett) 1.10
Man's Fate (Malraux) 1.10
Mayor of Casterbridge (Hardy) 1.10
Memoirs of Casanova 1.10
Messer Marco Polo (Byrne) 1.10
Moby Dick (Melville) 1.10
Moll Flanders (Defoe) 1.10
Moon and Sixpence (Maugham) 1.10
Mrs. Dalloway (Woolf) 1.10
My War With the U. S. (Bemelmans) 1.10
Nana (Zola) 1.10
Napoleon (Ludwig) 1.10
Native Son (Wright) 1.10
Of Human Bondage (Maugham) 1.10
Of Mice and Men (Steinbeck) 1.10
Old Wives' Tale (Bennett) 1.10
Oracles of Nostradamus 1.10
Outline of Psychoanalysis 1.10
Penguin Island (France) 1.10
Philosophy of Plato 1.10
Philosophy of Schopenhauer 1.10
Pickwick Papers (Dickens) 1.10
Plato's Republic (Plato) 1.10
Poems of Longfellow 1.10
Point Counter Point (Huxley) 1.10
Politics (Aristotle) 1.10
Portrait of the Artist As a Young Man (Joyce).. 1.10
Portrait of a Lady (James) 1.10
The Possessed (Dostoyevsky) 1.10
Precious Bane (Webb) 1.10
The Prince, and Discourses (Machiavelli) 1.10
Progress and Poverty (George) 1.10
Purple Land (Hudson) 1.10
The Rainbow (Lawrence) 1.10
Rebecca (Du Maurier) 1.10
Red Badge of Courage (Crane) 1.10
Red and the Black (Stendhal) 1.10
Red Star Over China (Snow) 1.10
Return of the Native (Hardy) 1.10
Roan Stallion (Jeffers) 1.10
Romance of Leonardo da Vinci (Merejkowski).. 1.10
Samuel Pepys' Diary 1.10
Sanctuary (Faulkner) 1.10
Sapho (Daudet) 1.10
Scarlet Letter (Hawthorne) 1.10
Sea and the Jungle (Tomlinson) 1.10
The Selected Verse of Ogden Nash 1.10
Seven Gothic Tales (Dinesen) 1.10
Shakespeare's Comedies 1.10
Shakespeare's Histories and Poems 1.10
Shakespeare's Tragedies 1.10
Short Bible (Goodspeed & Smith) 1.10
Short Stories of Tchekov 1.10
Sister Carrie (Dreiser) 1.10
Six Plays by Kaufmann and Hart 1.10
Sons and Lovers (Lawrence) 1.10
Studies in Murder (Pearson) 1.10
Sun Also Rises (Hemingway) 1.10
Tale of Two Cities (Dickens) 1.10
Ten Days That Shook the World (Read) 1.10
Tess of the D'Urbervilles (Hardy) 1.10
Theory of the Leisure Class (Veblen) 1.10
Three Musketeers (Dumas) 1.10
Thus Spake Zarathustra (Nietzsche) 1.10
Tom Jones (Fielding) 1.10

ALL THY CONQUESTS
By Alfred Hayes
A story of Rome and its liberators. $2.75.

Tono Bungay (Wells) 1.10
Tortilla Flat (Steinbeck) 1.10
Travels of Marco Polo (Byrne) 1.10
Tristram Shandy (Sterne) 1.10
Turn of the Screw (James) 1.10
Twentieth Century American Poetry 1.10
Two Years Before the Mast (Dana) 1.10
Vanity Fair (Thackeray) 1.10
Victory (Conrad) 1.10
Virgil's Works 1.10
Walden (Thoreau) 1.10
Way of All Flesh (Butler) 1.10
Winesburg, Ohio (Anderson) 1.10
Wuthering Heights (Brontë) 1.10

Giants

Complete Works of Homer 1.95
Complete Keats and Shelley 1.95
Complete Poe 1.95
Conquest of Mexico & Peru (Prescott) 1.95
Three Complete Novels of Sir Walter Scott 1.95
Flowering of New England (Brooks) 1.95
Forty Days of Musa Dagh (Werfel) 1.95
Great Ghost Stories 1.95
Guide to Great Orchestral Music (Spaeth) 1.95
History of the Great American Fortunes (Myers) 1.95
Jean Christophe (Rolland) 1.95
Les Misérables (Hugo) 1.95
Moby Dick (Melville) 1.95
Mythology (Bulfinch) 1.95
On War (Clausewitz) 1.95
Origin of Species (Darwin) 1.95
Poems and Prose of Pushkin 1.95
Short Stories of Ernest Hemingway 1.95
Sixteen Famous American Plays 1.95
Sixteen Famous British Plays 1.95
Tristram Shandy (Sterne) 1.95
War & Peace (Tolstoy) 1.95

Illustrated

Autobiography of Benjamin Franklin 2.00
Crime and Punishment (Dostoyevsky) 2.00
Divine Comedy (Dante) 2.00
Emerson's Essays 2.00
Green Mansions (Hudson) 2.00
Holy Bible 2.00
Jane Eyre (Brontë) 2.00
Leaves of Grass (Whitman) 2.00
Pickwick Papers (Dickens) 2.00
Poems of Longfellow 2.00
Shakespeare's Comedies 2.00
Tom Jones (Fielding) 2.00
Wisdom of Confucius 2.00

MYSTERY AND ADVENTURE

Anything For A Quiet Life (Avery) ..... .25
Billy the Kid ..... .25
Black Cripple (Keverne) ..... .25
Bluewater Landing (Reid) ..... .25
Buffalo Box (Gruber) ..... .25
Bugles in the Afternoon (Haycox) ..... .25
Captain From Connecticut (Forester) ..... .25
Case in the Clinic (Lorac) ..... .25
The Cask ..... .25
Danger Zone (Walsh) ..... .25
Darkness Falls From the Air (Balchin) ..... .25
Dark Square (Meynell) ..... .25
Date With a Spy (Maddock) ..... .25
Death Down East (Blake) ..... .25
Death of a Saboteur ..... .25
Dr. Toby Finds Murder (Schley) ..... .25
Escape the Night (Eberhart) ..... .25
Evidence of Things Seen (Daly) ..... .25
Fighting Buckaroo (Curran) ..... .25
The Fog Comes (Collins) ..... .25
Goodnight Sheriff (Steeves) ..... .25
Heads You Live (Hume) ..... .25
House Without a Door (Daly) ..... .25
Inquest (Wilde) ..... .25
Ironsides Smashes Through (Gunn) ..... .25
The Knife (Adams) ..... .25
Man From Peace River (Reid) ..... .25
Mr. Angel Comes Aboard (Booth) ..... .25
Mr. Mortimer Gets the Jitters (Gray) ..... .25
Murder by Marriage (Dean) ..... .25
Murder in Fiji (Vandercook) ..... .25
Murder in Mink (Dean) ..... .25
Navy Colt (Gruber) ..... .25
Net of Cobwebs (Holding) ..... .25
Nine Times Nine (Holmes) ..... .25
Nineteenth Hole Mystery (Adams) ..... .25
No Hands on the Clock (Homes) ..... .25
Nothing Can Rescue Me (Daly) ..... .25
O'Halloran's Luck (Benet) ..... .25
On Ice (Dean) ..... .25
Patience for Maigret (Simenon) ..... .25
Policeman's Holiday (Penny) ..... .25
The Prisoner of Zenda (Hope) ..... .25
Rogue Male (Household) ..... .25
The Rynox Murder Mystery (McDonald) ..... .25
Say Yes to Murder (Ballard) ..... .25
Scaramouche (Sabatini) ..... .25
Simon Lash (Gruber) ..... .25
Six Feet of Dynamite (Gray) ..... .25
Spades at Midnight (Maddock) ..... .25
Step in the Dark (White) ..... .25
Strange Case of Miss Annie Spragg (Bromfield) .25
Tales of Piracy (Defoe) ..... .25
Then There Were Three (Homes) ..... .25
This Gun for Hire (Greene) ..... .25
The Town Cried Murder (Ford) ..... .25
Trail Boss (Dawson) ..... .25
Unexpected Night (Daly) ..... .25
Vanishing Corpse (Gilbert) ..... .25
Wanted for Murder (Holt) ..... .25
Was It Murder? (Hilton) ..... .25
Whispering Man (Holt) ..... .25

OFFICIAL MANUALS, GENERAL

10-410: Army Baker ..... .25
10-405: Army Cook ..... .25
10-406: Cooking Dehydrated Foods ..... .15
10-407: Cutting of Beef ..... .20
10-408: Cutting and Preparing Lamb ..... .10
10-550: Fuels and Carburetion ..... .15
10-205: Mess Management and Training ..... .25
10-515: The Motorcycle ..... .20

The Newest Military Classics

JOMINI'S ART OF WAR

Edited by Lieutenant Colonel J. D. Hittle, USMC

The brilliant contributions Jomini made to analyzing and codifying the art of war have been largely eclipsed by the fame of Clausewitz. Until after the Civil War, Jomini was considered the premier military writer (Stonewall Jackson died with a copy of this book in his saddle-bags), and Clausewitz a cloudy theoretician.

Colonel Hittle here refurbishes an unjustly tarnished reputation. His introduction and notes are by themselves a brilliant contribution to military writing. 161 pages, illustrations. $2.50.

CAESAR'S GALLIC CAMPAIGNS

Edited by Lieutenant Colonel S. G. Brady

Here is the first readable version, in modern English, of this military classic. Caesar was a surpassing military genius. This stirring record of his nine years' struggle against the Gallic tribes is probably the most famous military book in the world. The maps, illustrations and interpretative notes help illuminate the lucid text. The foreword gives a comprehensive record of Caesar's life, with fascinating personal details. 230 pages. $2.50.

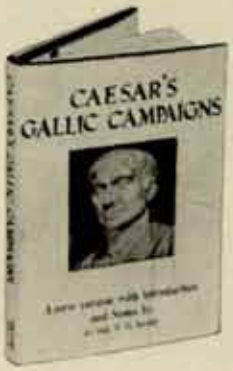

DU PICQ'S BATTLE STUDIES

Edited by Colonel John Greely and Major Robert Cotton

This famous book on the psychology of battle was written almost three-quarters of a century ago by an obscure French Colonel. It is a luminous statement of the principles of battle. Nowhere is there a better analysis of the human element in war. 273 pages. $2.00.

Order from

The Coast Artillery Journal

631 Pennsylvania Avenue, N.W. **WASHINGTON 4, D. C.**