JULY 2002

SL-3-10269A

PCN 123 102690 00

TAMCN E10357G

MARINE CORPS STOCKLIST

COMPONENTS LIST FOR

METEOROLOGICAL STATION GROUP

AN/TMQ-49

NSN 6660-01-428-9218

THIS PUBLICATION IS REQUIRED FOR OFFICIAL USE OR FOR ADMINISTRATIVE OR OPERATIONAL PURPOSES ONLY. DISTRIBUTION IS LIMITED TO US GOVERNMENT AGENCIES. OTHER REQUESTS FOR THIS DOCUMENT MUST BE REFERRED TO: COMMANDANT OF THE MARINE CORPS (ARD), WASHINGTON, D.C. 20380-0001

DEPARTMENT OF THE NAVY
Headquarters, U.S. Marine Corps
Washington, DC 20380-0001

31 July 2002

Marine Corps Stocklist, SL-3-10269A, TAMCN E10357G, is effective upon receipt.

This publication supersedes Marine Corps Stocklist, SL-3-10269A, dated March 2002, PCN 123 102690 00.

BY DIRECTION OF THE COMMANDANT OF THE MARINE CORPS

OFFICIAL

R P Shockey

R. P. SHOCKEY
Director, Program Support
Marine Corps Systems Command

DISTRIBUTION: PCN 123 102690 00

PREFACE

SCOPE

1. This publication lists all components and accessories for collection-type supply items, such as major combinations, systems, groups, outfits, kits, sets or assortments. The components to be issued with the end item are identified under the heading of "SUPPLY SYSTEM RESPONSIBILITY" and when required, under the heading "COLLATERAL MATERIEL." End items requiring collateral materiel are governed by whether the end item is initial or replacement issue. The Assistant Commander Acquisition and Logistics, Code ACAL (PSD-M3), 814 Radford Boulevard, Albany, STE 20343, Albany, Georgia 31704-0343, will direct whether the issue of the end item is with collateral materiel or without collateral materiel. Those items listed under "USING UNIT RESPONSIBILITY" heading are to be requisitioned separately through the supply system when applicable. Using Units are also responsible for requisitioning the required publications to support the end item identified by the ID number shown on the cover of this SL-3. The end item will be complete when the total quantity of items, as applicable, shown in the SL-3 is on hand.

LIST OF COMPONENTS

2. This listing comprises the major portion of this publication. The data, arranged in columnar form, presents the information needed to identify the item and determine its type of issue.

3. Item Number (Column 1). This column specifies a number assigned to each item as it appears in the list. Numbers are assigned in sequence and are for reference purposes only.

4. Stock Number (Column 2). This column furnishes the National Stock Number (NSN) assigned to the item.

5. Reference Designator/Figure-Key (Column 3). This column contains alphabetical and/or numerical designators for referencing individual component or item to an illustration. The absence of a reference designator indicates there is no illustration for the item.

6. Model (Column 4). This column indicates in alphabetical code the specific application of components, or assemblies when more than one model of the end item is contained in this publication.

7. Item Identification (Column 5). This column provides the item name and description listed under the heading of either "SUPPLY SYSTEM RESPONSIBILITY," "COLLATERAL MATERIEL" or "USING UNIT RESPONSIBILITY." (See paragraphs 10, 11, and 12.)

8. Unit of Measure (Column 6). This column gives the measurement standard of each item. It may or may not be the same as the unit of issue. For example, the unit of issue of a certain wire is coil but only 4 feet are required for the end item. Therefore, the unit of measure shown will not be used for requisitioning purposes. For the proper unit of issue and other required management data, refer to the applicable Management Data List (ML) when requisitioning.

9. Quantity Used in Unit (Column 7). This column lists the total quantity of an item, according to the unit of measure, required for full functional operation of the end item.

SUPPLY SUPPORT CATEGORIES

10. Supply System Responsibility. A list, in alphabetical sequence, of items that are furnished with and must be turned in with the end item. Any item requiring replacement is the responsibility of the holding organization or using unit.

11. Collateral Materiel. A list, in alphabetical sequence, of items that are supplied with the initial issue of the end item and are retained by the unit. The "9999-00-000-0000" NSN shown under the heading of "COLLATERAL MATERIEL" is for control within the distribution system only, and is not authorized for requisitioning purposes.

12. Using Unit Responsibility. A list, in alphabetical sequence, of items that will not be issued with the end item. They must be requisitioned, as required, through the supply system by the using unit or holding organization.

5TH ECHELON REHABILITATION PROGRAM

13. Major items returned under this program will be evacuated under the provision(s) of the applicable Marine Corps Order(s) with the items listed under Supply System Responsibility. Rebuild and replacement under a 5th Echelon rehabilitation program will be

limited to these items only. Those items under the heading "COLLATERAL MATERIEL" and using unit items shall be held by using organizations for application to the replacement end items.

CHANGES

14. Changes to this publication will be kept current by and issued as Page Inserts and/or Replacement Pages.

REQUISITIONING OF PUBLICATIONS

15. Publications stocked by the Marine Corps shall be requisitioned as set forth in the current editions of MCO P5600.31, Marine Corps Publications and Printing Regulations and MCO P4400.150, Marine Corps Consumer-Level Supply Policy Manual. Failure to comply with these instructions may result in return of the requisition or delay in processing.

PUBLICATIONS FEEDBACK

16. Technical publications play a critical role in achieving system and equipment readiness. Because of this factor, the currency and accuracy of the data published in these documents are essential. Form NAVMC 10772, Recommended Changes to Publications/ Logistics-Maintenance Data Coding provides a medium for accelerating information feedback to effect the necessary corrections, changes, and/or revisions, as appropriate. Typographical errors need not be reported. Using units shall requisition Form NAVMC 10772 through the normal Marine Corps supply channel. If this form is not adequate to cover a particular situation or recommendation, a letter should be directed to the Assistant Commander Acqusition and Logistics, Code ACAL (PSD-M3), 814 Radford Boulevard, STE 20343, Albany, Georgia 31704-0343.

MISCELLANEOUS

17. For full information concerning the Marine Corps Stocklist publications, see the current edition of MCO P5215.17, The Marine Corps Technical Publications System.

INVENTORY SHEET

18. Inventory Sheet is to be used for monthly inspection and may be reproduced locally by the user as required. The user may indicate in the first column the month of the first inventory.

SPECIAL NOTES

19. Items without NSN assigned should be requisitioned by Part Number and/or drawing number. When NSNs are assigned, changes to this SL-3 will be published.

20. Units may substitute Truck, Utility, M1097 (NSN 2320-01-346-9317) or Truck, Utility, M1097A1 (NSN 2320-01-371-9583) for this requirement.

6660-01-428-9218	METEOROLOGICAL STATION GROUP, AN/TMQ-49	EA

TECHNICAL DATA

FUNCTIONAL DESCRIPTION:

The Meteorological Station Group (MSG) contains the vehicles to support the Meteorological Measuring Set (MMS), which is a non radiating electronic, fully automated meteorological system for artillery support.

6660-01-428-9218	METEOROLOGICAL STATION GROUP, AN/TMQ-49	EA

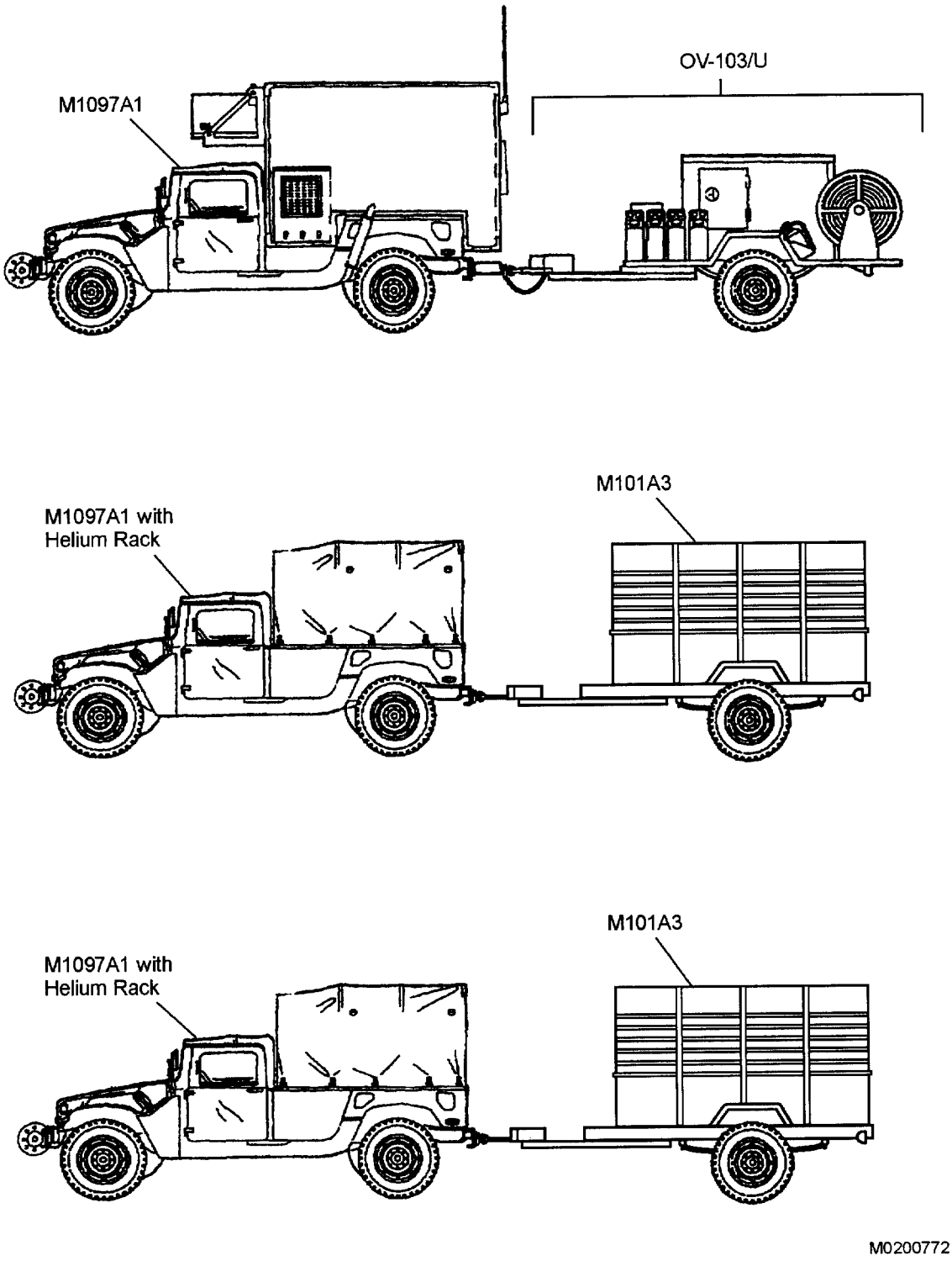

FIGURE 1. METEOROLOGICAL STATION GROUP

LIST OF COMPONENTS

1 ITEM NO	2 STOCK NUMBER	3 REF DESIG FIG-KEY	4 MODEL	5 ITEM IDENTIFICATION	6 UNIT OF MEAS	7 QTY USED IN UNIT
				SUPPLY SYSTEM RESPONSIBILITY		
1				COMPUTER SYSTEM, DIGITAL: (HP-200LX HSC); PN F1061A CAGE OFXH3	EA	1
				or		
2	7010-01-188-8051			COMPUTER SYSTEM, DIGITAL: (HP-71); (Components List Item, see SL-3-08989A); PN 9360132 CAGE 19200	EA	1
3	6115-01-449-6554			GENERATOR TRAILER GROUP: (Components List Item, see SL-3-10441A); PN OV-103/U CAGE 80058	EA	1
4	5895-01-416-2885	002-001		INSTALLATION KIT, ELECTRONIC EQUIPMENT: (inside shelter); (MK-2790/VRC); PN A3157976 CAGE 80063; c/o	EA	2
5	5985-01-297-2971	002-002		2 - ANTENNA: (vehicle); (AS-3900/VRC); PN A3017899-1 CAGE 80063	EA	
6	5995-01-428-6749	002-003		1 - CABLE ASSEMBLY, SPECIAL PURPOSE, ELECTRICAL: (CX13501/VRC (11 FT. 6 IN.)); PN A3249863-1 CAGE 80063	EA	
7	5995-01-219-4703	002-004		1 - CABLE ASSEMBLY, SPECIAL PURPOSE, ELECTRICAL: (CX-13292/VRC (4FT,0IN)); PN A3014038-2 CAGE 80063	EA	
8	5995-01-300-9291	002-005		1 - CABLE ASSEMBLY, SPECIAL PURPOSE, ELECTRICAL: (CX-13292/VRC (5FT.0IN.)); PN A3014038-7 CAGE 80063	EA	
9	5995-01-225-1659	002-006		1 - CABLE ASSEMBLY, RADIO FREQUENCY: (CG-3855/VRC (2FT,0IN)); PN A3014031-9 CAGE 80063	EA	
10	5995-01-219-7030	002-007		1 - CABLE ASSEMBLY, RADIO FREQUENCY: (CG-3855/VRC (7FT,0IN)); PN A3014031-3 CAGE 80063	EA	
11	5995-01-226-2442	002-008		2 - CABLE ASSEMBLY, RADIO FREQUENCY: (CG-3855/VRC (11FT,0IN)); PN A3014031-16 CAGE 80063	EA	
12	5995-01-300-9324	002-009		1 - CABLE ASSEMBLY, POWER, ELECTRICAL: (CX-13303/VRC (4FT.6IN.)); PN A3014040-9 CAGE 80063	EA	
13	5995-01-222-4209	002-010		1 - CABLE ASSEMBLY, SPECIAL PURPOSE, ELECTRICAL: (CX-13291/VRC (3FT,0IN)); PN A3014037-1 CAGE 80063	EA	
14	5995-01-219-7025	002-011		1 - CABLE ASSEMBLY, RADIO FREQUENCY: (CG-3856/VRC (5FT,0IN)); PN A3014032-3 CAGE 80063	EA	
15	4020-01-341-8795	002-012		2 - FIBER ROPE ASSEMBLY, SINGLE LEG: PN A3167672-1 CAGE 80063	EA	

LIST OF COMPONENTS

1 ITEM NO	2 STOCK NUMBER	3 REF DESIG FIG-KEY	4 MODEL	5 ITEM IDENTIFICATION	6 UNIT OF MEAS	7 QTY USED IN UNIT
16	5965-00-043-3463			2 - HANDSET: 1000 kohm; PN H250A/U CAGE 80058	EA	
17	5965-01-222-1420			2 - LOUDSPEAKER, PERMANENT MAGNET: (LS-671/VRC); PN A3014065-1 CAGE 80063	EA	
18	5975-01-188-8873	002-013		1 - MOUNTING BASE, ELECTRICAL EQUIPMENT: (MT-6352/VRC); PN A3013367-1 CAGE 80063	EA	
19	5975-01-235-1962	002-014		1 - MOUNTING BASE, ELECTRICAL EQUIPMENT: (MT-6353/VRC); PN A3014053-1 CAGE 80063	EA	
20	5340-01-391-2740	002-015		2 - PLATE, MOUNTING: PN A3014550-1 CAGE 80063	EA	
21	6660-01-443-2302	003-001		METEOROLOGICAL STATION, SEMIAUTOMATIC: (AN/TMQ-50); PN A3197474 CAGE 23667; c/o	EA	2
22	5995-01-485-9264	003-002		1 - CABLE ASSEMBLY, SPECIAL PURPOSE, ELECTRICAL: (W201); PN A3197747-20 CAGE 80063	EA	
23	8115-01-487-8964			1 - CASE SET, TRANSPORT AND STORAGE: PN 27-5962 CAGE 97200	EA	
24	6350-01-486-0019	003-003		1 - KEYPAD, CONTROL-COMMUNICATOR, PROGRAMMING: PN A3197451 CAGE 80063	EA	
25	6660-01-485-9262	003-004		1 - METEOROLOGICAL STATION GROUP: (SURFACE SUITE ASSY); PN A3197452 CAGE 80063	EA	
26	5985-01-395-5508	003-005		1 - TRIPOD, ANTENNA: PN GPT1200-4S-31 CAGE 09DP2	EA	
27	5975-01-197-5505			MOUNTING BASE, ELECTRICAL EQUIPMENT: PN 12340167 CAGE 19207	EA	1
28	5825-01-395-3513			NAVIGATION SET, SATELLITE SIGNALS: (AN/PSN 11(V)(1)); (Components List Item, see SL-3-09880A); PN 822-0077-103 CAGE 13499	EA	2
29	5820-01-268-5105			RADIO SET: (AN/VRC-90A); (Components List Item, see SL-3-09671A); PN A3080230-1 CAGE 80063	EA	2
30	6660-01-445-4594			THEODOLITE, METEOROLOGICAL: (AN/PMN-1); PN 20-9128 CAGE 63848	EA	1
31	2330-01-372-5641			TRAILER, CARGO: (M10143); 0.75 tons cap; box/lattice side extensions; PN 8750261 CAGE 19207	EA	2
32	2320-01-146-7187			TRUCK, UTILITY: (HMMWV M1097 Variant); 4 wheels; 2 wheel dr; hydraulic brakes; (Components List Item, see TM-2320-10); PN 8750124 CAGE 19207	EA	3
				METEOROLOGICAL MEASURING SET (AN/TMQ-41)		
33	6660-01-386-3906			METEOROLOGICAL MEASURING SET: (AN/TMQ-41); PN A3197800 CAGE 23667; c/o	EA	1
34	4120-00-916-9404			1 - AIR CONDITIONER: floor or wall mounted; 115v; 9000 BTU; PN B060074 CAGE 97403	EA	

LIST OF COMPONENTS

1 ITEM NO	2 STOCK NUMBER	3 REF DESIG FIG-KEY	4 MODEL	5 ITEM IDENTIFICATION	6 UNIT OF MEAS	7 QTY USED IN UNIT
35	5963-01-391-2714			1 - AMPLIFIER SUBASSEMBLY: (UHF preamp); (shelter rear); PN A3197568 CAGE 80063	EA	
36	5985-01-308-8988			2 - ANTENNA: (AS-3900A/VRC); (SINCGARS); PN A3017899-2 CAGE 80063	EA	
37	5985-01-374-1650			1 - ANTENNA: (VLF preamplifier); (rear curb side); PN 15633 CAGE 63653	EA	
38	5985-01-375-4660			1 - ANTENNA: (GPS); single; 1575.420 MHz; 0.840 in. h, 2.200 in. dia; PN AT575-030 CAGE 0UVG2	EA	
39	5985-01-390-8684			1 - ANTENNA: PN A3197569 CAGE 80063	EA	
40	5895-00-985-9024			2 - ANTENNA: single whip; 30.000 - 75.950 MHz; -25.0 to 70.0 deg Celsius; 50 ohm impd; PN SM-D-542001 CAGE 80063	EA	
41	5985-01-414-2372			1 - ANTENNA: (rear of shelter); UHF; omni directional; whip sgl element; fixed beam; socket connector; 395 to 410 MHz; 50 ohm impd; 20.520 in. oa lg, 3.000 in. dia; PN A3197566 CAGE 80063	EA	
42	5985-00-733-6042			1 - ANTENNA ELEMENT: (AT-1039/U); (rear curb side); vlf; tapered sgl element; 4.333 ft lg, 0.482 in. oa dia; PN 120-26 CAGE 23657	EA	
43	5985-01-063-1574			2 - ANTENNA ELEVATOR GROUP: (Components List Item, see TM 11-5985-357-13); PN 0E-254/GRC CAGE 80058	EA	
44	5340-01-390-8687			1 - BRACKET, MOUNTING: (Antenna Boom Assy); PN A3197565 CAGE 80063	EA	
45	5995-01-491-3081			2 - CABLE ASSEMBLY, POWER, ELECTRICAL: (W401); (curb side cable reel); ac; power cable shelter to generator; PN A3197754 CAGE 80063	EA	
46	5995-01-390-8700			1 - CABLE ASSEMBLY, POWER, ELECTRICAL: (W104); (inside tunnel); PN A3197729 CAGE 80063	EA	
47	5995-01-491-3080			1 - CABLE ASSEMBLY, POWER, ELECTRICAL: (W405); PN A3197753 CAGE 80063	EA	
48	5995-01-391-2716			1 - CABLE ASSEMBLY, POWER, ELECTRICAL: (W111); (VLF remote); PN A3197732 CAGE 80063	EA	
49	5995-01-392-0044			1 - CABLE ASSEMBLY, RADIO FREQUENCY: (W103); (shelter to RDF); PN 16957ZZ CAGE 63653	EA	
50	5995-01-392-0034			1 - CABLE ASSEMBLY, RADIO FREQUENCY: (W112); (Loran Remote); PN 16193 CAGE 63653	EA	
51				2 - CABLE REEL: (left and right); PN A3197595 CAGE 23667	EA	

LIST OF COMPONENTS

1 ITEM NO	2 STOCK NUMBER	3 REF DESIG FIG-KEY	4 MODEL	5 ITEM IDENTIFICATION	6 UNIT OF MEAS	7 QTY USED IN UNIT
52	6660-01-428-6751			1 - COMPUTER, METEOROLOGICAL DATA: (LCU); PN 56553 CAGE 08YX1; c/o	EA	
53	6130-01-380-5101			1 - CONTROL, POWER SUPPLY: PN A3197530 CAGE 23667	EA	
54	7025-01-428-6750			2 - DISK DRIVE UNIT: removable; 1275 MB intl HDD; PN 56606 CAGE 08YX1	EA	
55	7025-01-393-2453			2 - DISK DRIVE UNIT: (CD ROM); PN 50274 CAGE 08YX1	EA	
56	6110-01-391-2710			1 - DISTRIBUTION BOX: (Power Entry Assy); PN A3197540 CAGE 80063	EA	
57	4140-01-418-5519			1 - FAN, CENTRIFUGAL: PN R3G280-AD19-01 CAGE 23667	EA	
58	5915-01-380-3934			1 - FILTER ASSEMBLY, ELECTRICAL: PN A3197535 CAGE 23667	EA	
59	5820-01-263-1760			1 - GROUNDING KIT: PN MK-2551A/U CAGE 80058	EA	
60	5895-01-225-0510			1 - INSTALLATION KIT, ELECTRONIC EQUIPMENT: (MK-2325/VRC-92, inside shelter and vehicle); PN PPL-18225 CAGE 80063; c/o	EA	
61	5985-01-297-2971			1 - ANTENNA: (AS-3900/VRC); PN A3017899-1 CAGE 80063	EA	
62	5995-01-274-5084	004-001		1 - CABLE ASSEMBLY, POWER, ELECTRICAL: (CX-13302/VRC (6FT.0IN.)); PN A3014039-5 CAGE 80063	EA	
63	5995-01-219-7035	004-002		1 - CABLE ASSEMBLY, RADIO FREQUENCY: (CG-3855/VRC (18FT,0IN)); PN A3014031-8 CAGE 80063	EA	
64	5995-01-219-4704	004-003		1 - CABLE ASSEMBLY, SPECIAL PURPOSE, ELECTRICAL: (CX-13292/VRC (6FT,0IN)); PN A3014038-3 CAGE 80063	EA	
65	4020-01-341-8795	004-004		1 - FIBER ROPE ASSEMBLY, SINGLE LEG: PN A3167672-1 CAGE 80063	EA	
66	5965-00-043-3463			1 - HANDSET: 1000 kohm; 150 ohm impd; PN H250A/U CAGE 80058	EA	
67	5995-01-466-0693			1 - LEAD ASSEMBLY, ELECTRICAL: (0 ft 5 in.); PN A3013552-10 CAGE 80063	EA	
68	5965-01-222-1420			1 - LOUDSPEAKER, PERMANENT MAGNET: (LS-671/VRC); (control unit); PN A3014065-1 CAGE 80063	EA	
69	5965-00-876-2375			1 - LOUDSPEAKER, PERMANENT MAGNET: 2w; 300 - 7000 Hz; 8 ohm impd; 7.031 in. lg, 5.656 in. w, 3.312 in. dia; PN MIL-L-12632/4 CAGE 81349	EA	

LIST OF COMPONENTS

1 ITEM NO	2 STOCK NUMBER	3 REF DESIG FIG-KEY	4 MODEL	5 ITEM IDENTIFICATION	6 UNIT OF MEAS	7 QTY USED IN UNIT
70	5975-01-188-8873			1 - MOUNTING BASE, ELECTRICAL EQUIPMENT: (MT-6352/VRC); PN A3013367-1 CAGE 80063	EA	
71	5340-01-391-2740	004-005		1 - PLATE, MOUNTING: PN A3014550-1 CAGE 80063	EA	
72	5975-01-413-1547			1 - SHELF, ELECTRICAL EQUIPMENT: PN A3050664-1 CAGE 80063	EA	
73	5440-01-449-6776			1 - LADDER, EXTENSION: PN 17-1-3619-1 CAGE 81337	EA	
74	7025-01-390-8682			1 - PRINTER, AUTOMATIC DATA PROCESSING: PN A3197520 CAGE 80063	EA	
75	5985-01-381-5668	005-001		1 - RADIO, DIRECTION FINDING (RDF) ANTENNA: (AS-4335/TMQ-41); PN A3197780 CAGE 63653; c/o	EA	
76	5985-01-390-8708	005-002		4 - ANTENNA ELEMENT: (RDF); PN A3197585 CAGE 80063	EA	
77	5825-01-392-2215	005-003		1 - CONTROL, DIRECTION FINDER: (hand terminal & cable); PN RTH20 CAGE 63653	EA	
78	5895-01-381-5106			1 - CONVERTER, SIGNAL DATA: (CV-4256/TMQ-41); PN A3197525 CAGE 23667	EA	
79	5985-01-390-8704	005-004		1 - DRIVE, ANTENNA: (RDF ELEVATION UNIT); PN A3197584 CAGE 80063	EA	
80		005-005		1 - H-FRAME: (RDF); PN A3197586 CAGE 23667	EA	
81	5985-01-391-2720	005-006		3 - PEDESTAL, ANTENNA: (RDF Leg); adjustable feet; PN A3197582 CAGE 80063	EA	
82	5985-01-390-8703	005-007		1 - PEDESTAL, ANTENNA: (RDF AZIMUTH UNIT); PN A3197583 CAGE 80063	EA	
83	6650-01-392-2204	005-008		1 - TELESCOPE, STRAIGHT: PN 17066RT CAGE 63653	EA	
84	5820-01-421-2605			1 - RADIO SET: (AN/VRC-92D); (Components List Item, see SL-3-09471B); PN A3251626-2 CAGE 80063	EA	
85	6660-01-380-3932			1 - RECEIVING SET, RADIOSONDE: (AN/UMQ-16); PN A3197500 CAGE 63653	EA	
86	5411-01-380-3936			1 - SHELTER, NONEXPANDABLE, INTEGRATED: (S-794/TMQ-41); PN A3197450 CAGE 23667	EA	
87	5805-01-318-8421			1 - TELEPHONE SET: plstc; battery operated; non-secure voice terminal; full duplex; secure light/audio ind; auto dial; 20-56 vdc; 1.5w oper req; 9.750 in. lg, 7.000 in. w, 4.250 in. h; PN 5285000-001 CAGE 17981	EA	
88	5950-01-390-8709			1 - TRANSFORMER, POWER: PN A3197480 CAGE 80063	EA	
89	5985-01-395-5508			1 - TRIPOD, ANTENNA: PN GPT1200-4S-31 CAGE 09DP2	EA	

LIST OF COMPONENTS

1 ITEM NO	2 STOCK NUMBER	3 REF DESIG FIG-KEY	4 MODEL	5 ITEM IDENTIFICATION	6 UNIT OF MEAS	7 QTY USED IN UNIT
				ELECTRONIC METEOROLOGICAL THEODOLITE (EMT) KIT		
90	6660-01-464-1555			METEOROLOGICAL MEASURING SET: (EMT); PN 95008A3000 CAGE 01365; c/o	EA	1
91	4730-00-831-4011			1 - ADAPTER, STRAIGHT, PIPE TO BOSS: cop aly; 2.5 in. lg; PN SCB36246 CAGE 80063	EA	
92	4730-00-408-4628			1 - ADAPTER, STRAIGHT, TUBE TO HOSE: cop aly; 1.812 in. lg; PN ML49 CAGE 80063	EA	
93	6660-00-663-8090			1 - ANEMOMETER: (ML-443A/PM); atmospheric opn method; 11.344 in. lg, 3.500 in. w, 2.625 in. dia; PN SM-D-183458 CAGE 80063	EA	
94	6660-00-151-7772			50 - BALLOON, METEOROLOGICAL: red; 100 g; 10/bx; PN ML161A CAGE 80063	EA	
95	6660-00-151-7773			50 - BALLOON, METEOROLOGICAL: black; 100 g; 10/bx; PN ML160A CAGE 81349	EA	
96	6660-00-663-8154			50 - BALLOON, METEOROLOGICAL: natural; 100 g; 10/bx; PN ML159A CAGE 81349	EA	
97	6660-00-663-8159			60 - BALLOON, METEOROLOGICAL: red; 30 g; 20/bx; PN MILB10743TYPEML64A CAGE 81349	EA	
98	6660-00-663-8158			50 - BALLOON, METEOROLOGICAL: natural; 30 g; PN ML50A CAGE 80063	EA	
99	6660-00-526-6041			30 - BALLOON, METEOROLOGICAL: dark blue; 30 g; PN ML51A CAGE 80063	EA	
100	6660-01-316-3652			1 - BAROMETER, ANEROID: digital hand held; PN HB-1A CAGE 55977	EA	
101	6660-00-663-4629			1 - CASE, ANEMOMETER: wood and metal; 11.000 in. lg, 6.500 in. w, 6.000 in. h; PN 1397PM CAGE 81349	EA	
102	6660-00-498-9631			1 - CASE, METEOROLOGICAL, EQUIPMENT: (ML-373); plywood; 31.750 in. lg, 25.750 in. w, 16.125 in. h; 4 hdl; PN SC-D-14781 CAGE 80063	EA	
103	6660-00-238-3044			2 - NOZZLE, METEOROLOGICAL BALLOON INFLATION: (ML-373); PN SCD15182 CAGE 80063	EA	
104	6685-01-136-2137			1 - PSYCHROMETER: PN 622-0011-1 CAGE 57560	EA	
105	6660-00-223-5084			1 - PSYCHROMETER: hand sling; -37 to 46 deg Celsius opr rng; 11.937 in. lg, 0.937 in. w, 0.485 in. h; PN SC-C-20626 CAGE 80063	EA	
106	6660-00-640-9162			1 - PSYCHROMETER: sling; -12 to 63 deg Celsius; 11.938 in. lg, 0.938 in. w, 0.485 in. h; PN ML224 CAGE 049X3	EA	

LIST OF COMPONENTS

1 ITEM NO	2 STOCK NUMBER	3 REF DESIG FIG-KEY	4 MODEL	5 ITEM IDENTIFICATION	6 UNIT OF MEAS	7 QTY USED IN UNIT
107	6685-00-515-4817			2 - THERMOMETER, SELF-INDICATING: -12.000 to 63.000 deg Celsius; mercury; fluctuating; 9.250 in. min and 9.500 in. max lg; PN SCC20627 CAGE 80063	EA	
108	6685-00-533-5971			2 - THERMOMETER, SELF-INDICATING, LIQUID IN GLASS: PN SCC20627M37T0P46C CAGE 80063	EA	
109	5180-00-408-1859			1 - TOOL KIT, ELECTRICIAN'S: (TE-33(TL's)); PN TE33 CAGE 80063	EA	
110	6675-00-301-1317			1 - TRIPOD, SURVEYING: (GST20); hardwood, ext legs; w/holding strap; (Note: Qty to 2 when MMS); PN 296632 CAGE 35643	EA	
111	4720-00-263-3306			12 - TUBING, NONMETALLIC: natural rbr; 2400 psi; rnd xsect; 180.000 in. lg, 0.500 in. id, 0.650 in. od; PN ZZ-T-831 CAGE 81348	EA	
				METEOROLOGICAL MEASURING SET SUPPORT KIT		
112	6660-01-464-2159			METEOROLOGICAL MEASURING SET SUPPORT KIT: PN 95008A4000 CAGE 01365; c/o	EA	1
113	4730-00-831-4011			2 - ADAPTER, STRAIGHT, PIPE TO BOSS: cop aly; thd ext pipe 1st end; thd ext boss 2nd end; 0.812 in. npt thd 1st end, 0.968 in. uns thd 2nd end; PN SCB36246 CAGE 80063	EA	
114	4730-00-408-4628			1 - ADAPTER, STRAIGHT, TUBE TO HOSE: cop aly; thd int tub 1st end; unthd int hose 2nd end; 0.531 in. id hose 1st end; 0.719 in. od hose 2nd end; 0.719 in. od tube; 0.750 in. 2B unf thd 1st end; PN ML49 CAGE 80063	EA	
115	6660-00-663-8090			1 - ANEMOMETER: (ML-443A/PM); 11.344 in. lg, 3.500 in. w, 2.625 in. dia; PN SM-D-183458 CAGE 80063	EA	
116	6660-00-515-4214			30 - BALLOON, METEOROLOGICAL: (ML-519/UM, 300 g); PN ML519UM CAGE 80058	EA	
117	6660-00-914-2545			30 - BALLOON, METEOROLOGICAL: (ML-537, 1200 g); natural; PN J350-4A CAGE 82187	EA	
118	6660-00-936-8927			380 - BALLOON, METEOROLOGICAL: (ML-635, 150 g); PN ML635UM CAGE 80058	EA	
119	6660-01-316-3652			1 - BAROMETER, ANEROID: digital hand held; PN HB-1A CAGE 55977	EA	
120	6660-00-663-4629			1 - CASE, ANEMOMETER: wood and metal; 11.000 in. lg, 6.500 in. w, 6.000 in. h; PN 1397PM CAGE 81349	EA	
121	6660-00-498-9631			2 - CASE, METEOROLOGICAL EQUIPMENT: plywood; enamel surf; 4 hdl frt and rear; 31.750 in. lg, 25.750 in. w, 16.125 in. h; PN SC-D-14781 CAGE 80063	EA	
122	6660-00-999-2663			1 - INFLATION LAUNCHING: (ML594U); PN SM-E-2000501 CAGE 80063	EA	

LIST OF COMPONENTS

1 ITEM NO	2 STOCK NUMBER	3 REF DESIG FIG-KEY	4 MODEL	5 ITEM IDENTIFICATION	6 UNIT OF MEAS	7 QTY USED IN UNIT
123	6660-00-663-7924			1 - NOZZLE, METEOROLOGICAL BALLOON INFLATION: 0.625 in. od; PN ML196 CAGE 80063	EA	
124	6660-00-238-3044			1 - NOZZLE, METEOROLOGICAL BALLOON INFLATION: (ML-373); PN SCD15182 CAGE 80063	EA	
125	6660-01-369-3187			370 - PARACHUTE, METEOROLOGICAL: plstc; 34.000 in. lg, 13.000 in. h, 31.800 in. dia; PN J390-SP001 CAGE 82187	EA	
126	6675-00-514-5575			1 - POLE, RANGE: stl; sectional; rnd; 6.500 ft lg; 12.000 in. band lg; PN FAC01026 CAGE 34871	EA	
127	6660-00-223-5084			1 - PSYCHROMETER: hand sling; -37 to 46 deg Celsius; 11.937 in. lg, 0.937 in. w, 0.485 in. h; PN SC-C-20626 CAGE 80063	EA	
128	6685-01-136-2137			1 - PSYCHROMETER: PN 622-0011-1 CAGE 57560	EA	
129	6660-01-425-2624			100 - RADIOSONDE SET: (GPS); PN RS80-15G CAGE 63653	EA	
130	6660-01-340-7906			100 - RADIOSONDE SET: (Vaisala, LORAN ML-662, 10/BX); PN RS80-15L CAGE 63653	EA	
131	6660-01-353-8793			170 - RADIOSONDE SET: (Vaisala, RDF ML-664, 10/BX); PN RS80-67 CAGE 63653	EA	
132	6660-00-356-5196			1 - SHROUD, BALLOON: PN MILB10742SIGC CAGE 81349	EA	
133	6685-00-515-4817			2 - THERMOMETER, SELF-INDICATING: -12.000 to 63.000 deg Celsius; 9.250 in. min and 9.500 in. max lg; PN SCC20627 CAGE 80063	EA	
134	6685-00-533-5971			2 - THERMOMETER, SELF-INDICATING, LIQUID IN GLASS: PN SCC20627M37TOP46C CAGE 80063	EA	
135	5180-00-408-1859			1 - TOOL KIT, ELECTRICIAN'S: (TL'S); PN TE33 CAGE 80063	EA	
136	6675-00-240-1881			1 - TRIPOD, SURVEYING: met; fixed legs; 39.00 in. leg lg; w/holding strap; PN A-A-52049 CAGE 58536	EA	
137	4720-00-242-6308			12 - TUBING, NONMETALLIC: natural rbr; rnd xsect; 1700 psi; 144.000 in. lg, 0.750 in. id, 1.000 in. od; PN ZZ-T-831 CAGE 81348	EA	
138	4720-00-263-3306			12 - TUBING, NONMETALLIC: natural rbr; 2400 psi; rnd xsect; 180.000 in. lg, 0.500 in. id, 0.650 in. od; PN ZZ-T-831 CAGE 81348	EA	
139	4820-00-620-6725			1 - VALVE, REGULATING, FLUID PRESSURE: brass; hydrogen; 2.500 in. od; PN ML528GM CAGE 80049	EA	

LIST OF COMPONENTS

1 ITEM NO	2 STOCK NUMBER	3 REF DESIG FIG-KEY	4 MODEL	5 ITEM IDENTIFICATION	6 UNIT OF MEAS	7 QTY USED IN UNIT
				USING UNIT RESPONSIBILITY		
				NOTE: Using units should refer to the SL-1-2 and requisition the required publications to support the item identified by the ID number shown on the cover of this SL-3.		
				METEOROLOGICAL MEASURING SET (AN/TMQ-41)		
140	6145-00-910-8847			CABLE, TELEPHONE: (WF-16U); coil; 5280 ft per coil; PN WF-16U(1 MILE) CAGE 80063	EA	AR
141	6145-01-259-9203			CABLE, TELEPHONE: (MX-10891/G); PN WF16U(1000 FT.) CAGE 80063	EA	AR
142	1080-01-266-1827			CAMOUFLAGE SCREENING SYSTEM: woodland; light-weight; radar scattering; w/o support system; PN 13228E5932 CAGE 97403	EA	AR
143	1290-00-930-4260			COMPASS, MAGNETIC, UNMOUNTED: al case; top read; u/m im mils; 0.0 to 6400.0 and 0.0 to 1200.0 grad mg; w/mirror and carrying case; 2.781 in. lg, 2.781 in. w, 1.234 in. h; PN 10547166 CAGE 19206	EA	1
144	4120-00-270-4512			EXTINGUISHER, FIRE: carbon dioxide; hand type with squeeze grip; standard charge; 5 lb cap; w/wall bracket; PN F5COV CAGE 02788	EA	AR
145	6545-00-922-1200			FIRST AID KIT, GENERAL PURPOSE: disposable; nonsterile; 12 qty; (Components List Item, see SL-3-00678); PN SC C-6545-IL VOL 2 CAGE 64616	EA	AR
146	5975-00-224-5260			ROD, GROUND: stl; 72.000 in. lg, 0.750 in. dia; PN 148X CAGE 21530	EA	AR
147	1080-00-108-1173			SUPPORT, CAMOUFLAGE SCREENING SYSTEM: wood-land/desert; w/case; PN 170212 CAGE 53119	EA	AR
				ELECTRONIC METEOROLOGICAL THEODOLITE KIT		
148	6135-00-985-7845			BATTERY, NONRECHARGEABLE: AA; 1.5v; alkaline; 24/pg; PN 20-0571-1988 NEDA 15A CAGE 80204	EA	AR
149	6135-00-826-4798			BATTERY, NONRECHARGEABLE: AAA; 1.5v; alkaline; 12/pg; PN E92 CAGE 83740	EA	1
150	6135-01-168-2944			BATTERY, NONRECHARGEABLE: (BA-5600); PN BA-5600/PSC-2 CAGE 80058	EA	AR
151	6135-00-900-2139			BATTERY, NONRECHARGEABLE: alkaline; 9v; PN MN1604 CAGE 90303	EA	AR
152	8120-00-244-6981			CYLINDER, COMPRESSED GAS, HELIUM, TECHNICAL: (min req 16); 2491 psi; 216 cu ft cap rating; PN RR-C-901/1 CAGE 81348	EA	AR

LIST OF COMPONENTS

1 ITEM NO	2 STOCK NUMBER	3 REF DESIG FIG-KEY	4 MODEL	5 ITEM IDENTIFICATION	6 UNIT OF MEAS	7 QTY USED IN UNIT
153	5120-00-251-4489			HAMMER, HAND: sledge; blacksmith's double-faced; 8 lb; PN 11103 CAGE 94536	EA	1
154	6830-00-660-0027			HELIUM, TECHNICAL: (NONFLAMMABLE); PN BB-H-1168 CAGE 81348	CF	AR
155	6260-01-074-4229			LIGHT, CHEMILUMINESCENT: grn; std; self-contained, waterproof; general purpose; 12.0 hr life rating; 6.000 in. lg; PN A-A-55134-B CAGE 58536	EA	1
156	6260-01-074-4230			LIGHT, CHEMILUMINESCENT: yellow; std, self-contained, compact, heatless; hi intensity; 0.30 hr life rating; 5.626 in. min and 6.043 in. max lg; PN A-A-55132-F CAGE 58536	EA	1
157	6645-01-106-4302			STOPWATCH: min and sec scale; crown or push-piece and moving side slide control; PN 390 CAGE 38776	EA	AR
158	4020-00-498-9565			TWINE, FIBROUS: natural; 6 twisted strd; 48 psi; 450 yd lg; PN MILT713 CAGE 81349	LB	AR
159	9390-00-264-6158			WICK: (30/BX); 3.000 in. lg, 0.156 in. od, 0.125 in. id; PN SCD21272-3MODIFIED CAGE 80063	EA	1
160	5120-00-449-8083			WRENCH, ADJUSTABLE: stl; 215 open end sgl hd rack and worm adjustment; 9.500 in. min and 10.500 in. max lg, 0.625 in. hd thk, 1.133 in. wr surf; PN D710 CAGE 96508	EA	AR
				METEOROLOGICAL MEASURING SET SUPPORT KIT		
161	6135-00-835-7210			BATTERY, NONRECHARGEABLE: alkaline; D cell; 1.5v; (BA-3030/U); (12/pg); PN BA-3030/U CAGE 81349	EA	AR
162	6135-00-985-7845			BATTERY, NONRECHARGEABLE: alkaline; AA; 1.5v; 24/pk; PN 20-0571-1988 NEDA 15A CAGE 80204	EA	1
163	6135-00-826-4798			BATTERY, NONRECHARGEABLE: alkaline; AAA; 1.5v; 12/pk; PN E92 CAGE 83740	EA	AR
164	6135-00-900-2139			BATTERY, NONRECHARGEABLE: alkaline; 9v; PN MN1604 CAGE 90303	EA	AR
165	8120-00-244-6981			CYLINDER, COMPRESSED GAS, HELIUM, TECHNICAL: (min req 16); PN RR-C-901/1 CAGE 81348	EA	AR
166	5120-00-251-4489			HAMMER, HAND: nonmagnetic; sledge, blacksmith's double faced; 8 lb; PN 11103 CAGE 94536	EA	AR
167	6830-00-660-0027			HELIUM, TECHNICAL: nonflammable; PN BB-H-1168 CAGE 81348	CF	AR
168	7510-01-199-8706			INK, PRINTING CARTRIDGE: PN 104-001-114 CAGE 64556	EA	1
169	6260-01-074-4229			LIGHT, CHEMILUMINESCENT: grn; std; 12.0 hr life rating; self-contained; waterproof; general purpose; 6.000 in. lg; PN A-A-55134-B CAGE 58536	EA	AR
170	6260-01-074-4230			LIGHT, CHEMILUMINESCENT: yellow; std; 0.30 hr life rating; hi-intensity; 5.625 in. min and 6.043 in. max lg; PN A-A-55132-F CAGE 58536	EA	AR

LIST OF COMPONENTS

1 ITEM NO	2 STOCK NUMBER	3 REF DESIG FIG-KEY	4 MODEL	5 ITEM IDENTIFICATION	6 UNIT OF MEAS	7 QTY USED IN UNIT
171	7530-00-800-0996			PAPER, TABULATING MACHINE, CONTINUOUS: white; sgl sheet; flat fold; 11.00 in. lg, 9.500 in. w; 2500 sh/bx; PN 56093-1 CAGE 34631	EA	2
172	5120-01-013-1676			SLIDE HAMMER, GROUND ROD: stl; 36 in. lg, 5/8 in. dia; PN P74-144 CAGE 45225	EA	AR
173	4020-00-498-9565			TWINE, FIBROUS: natural; 6 twisted str; mildew resistant; 1350 ft lg; PN MILT713 CAGE 81349	LB	AR
174	9390-00-264-6158			WICK: cot; tubular; 30/bx; PN SCD21272-3MODIFIED CAGE 80063	EA	AR
175	5120-00-449-8083			WRENCH, ADJUSTABLE: stl; 215 open end sgl hd rack and worm adjustment; 9.500 in. min and 10.500 in. max lg, 0.625 in. hd thk; 1.133 in. surf size; PN B107.8 CAGE 80204	EA	AR

6660-01-428-9218	METEOROLOGICAL STATION GROUP, AN/TMQ-49	EA

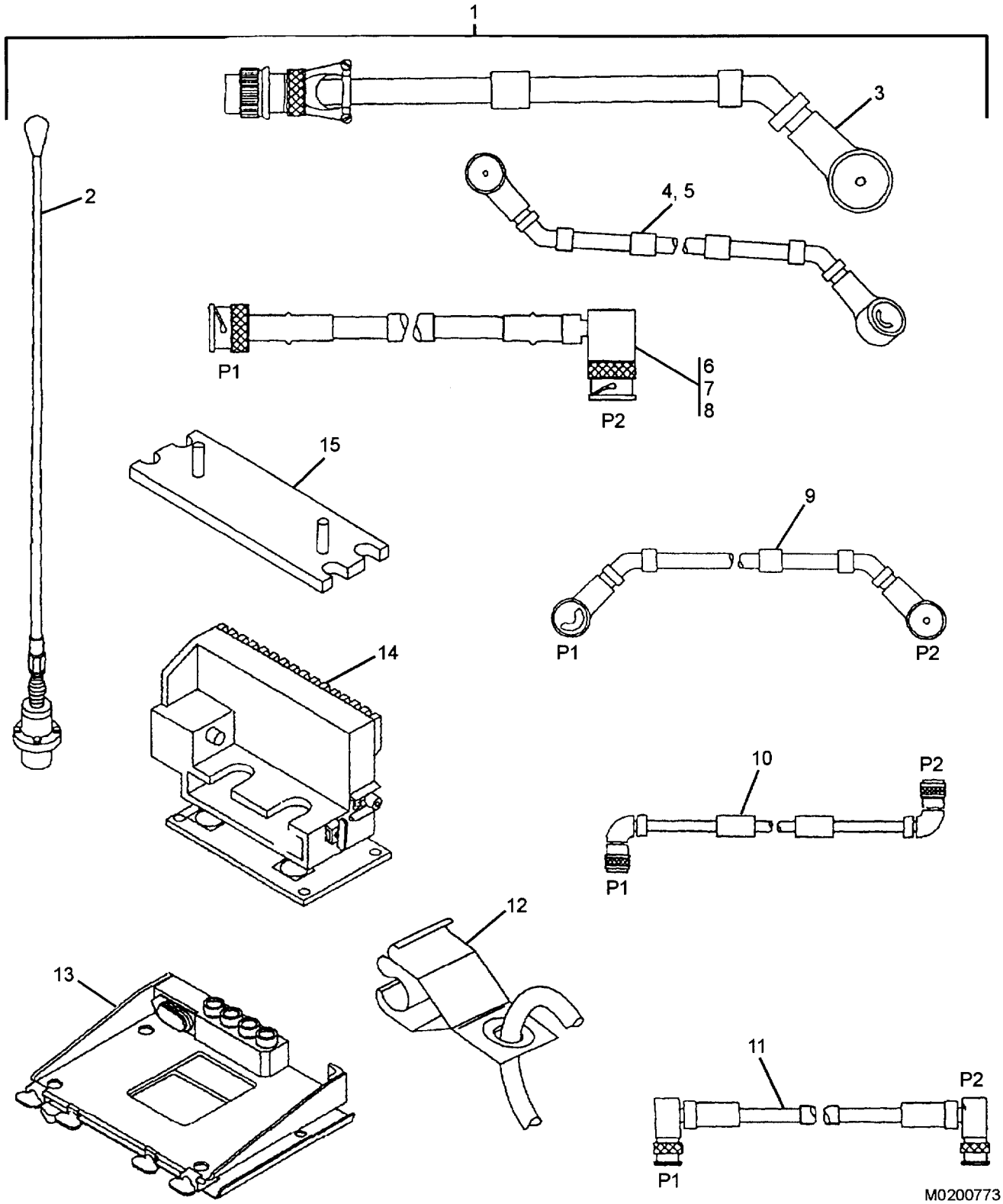

FIGURE 2. INSTALLATION KIT

6660-01-428-9218	METEOROLOGICAL STATION GROUP, AN/TMQ-49	EA

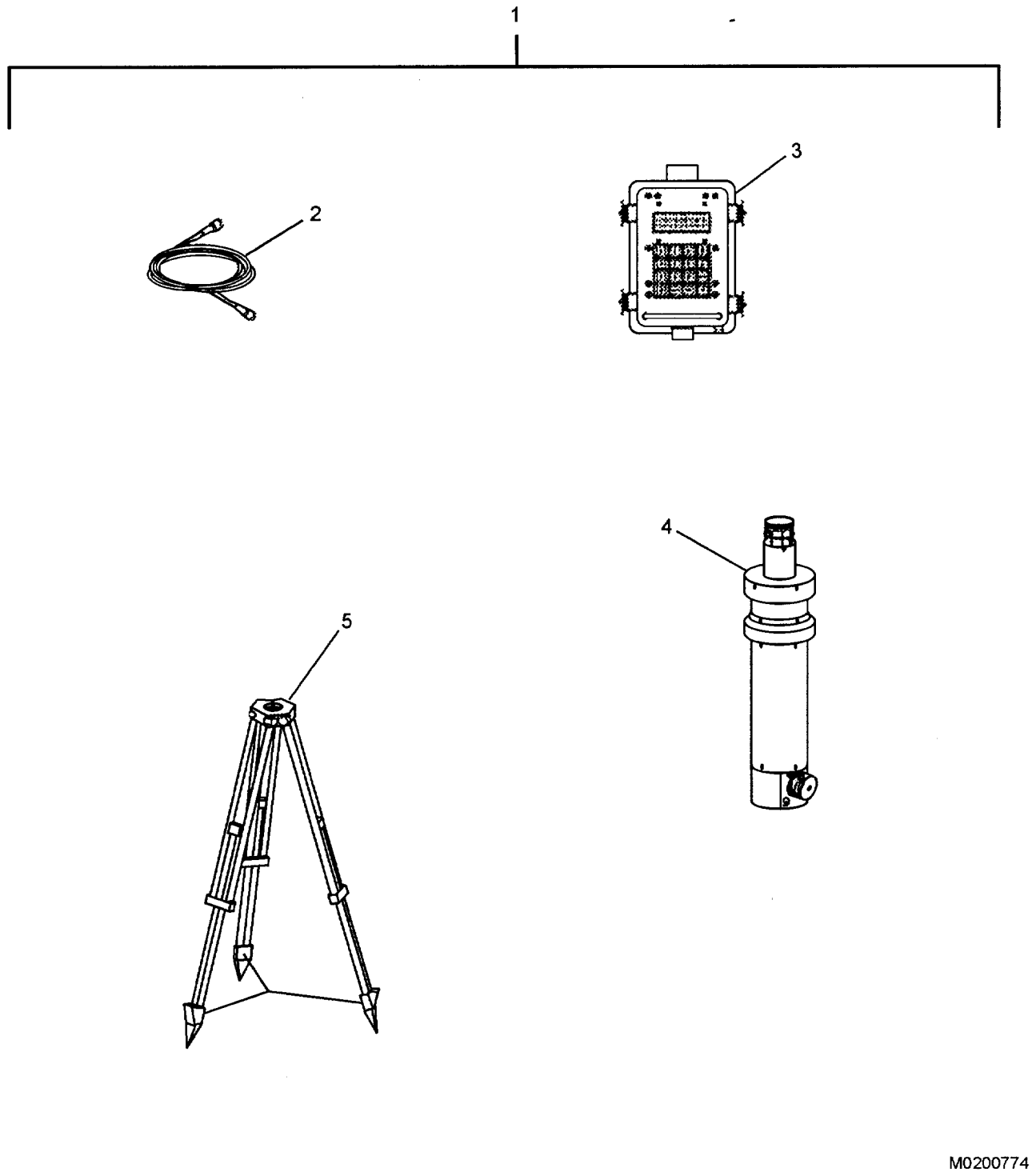

FIGURE 3. SEMIAUTOMATIC METEOROLOGICAL STATION

6660-01-428-9218	METEOROLOGICAL STATION GROUP, AN/TMQ-49	EA

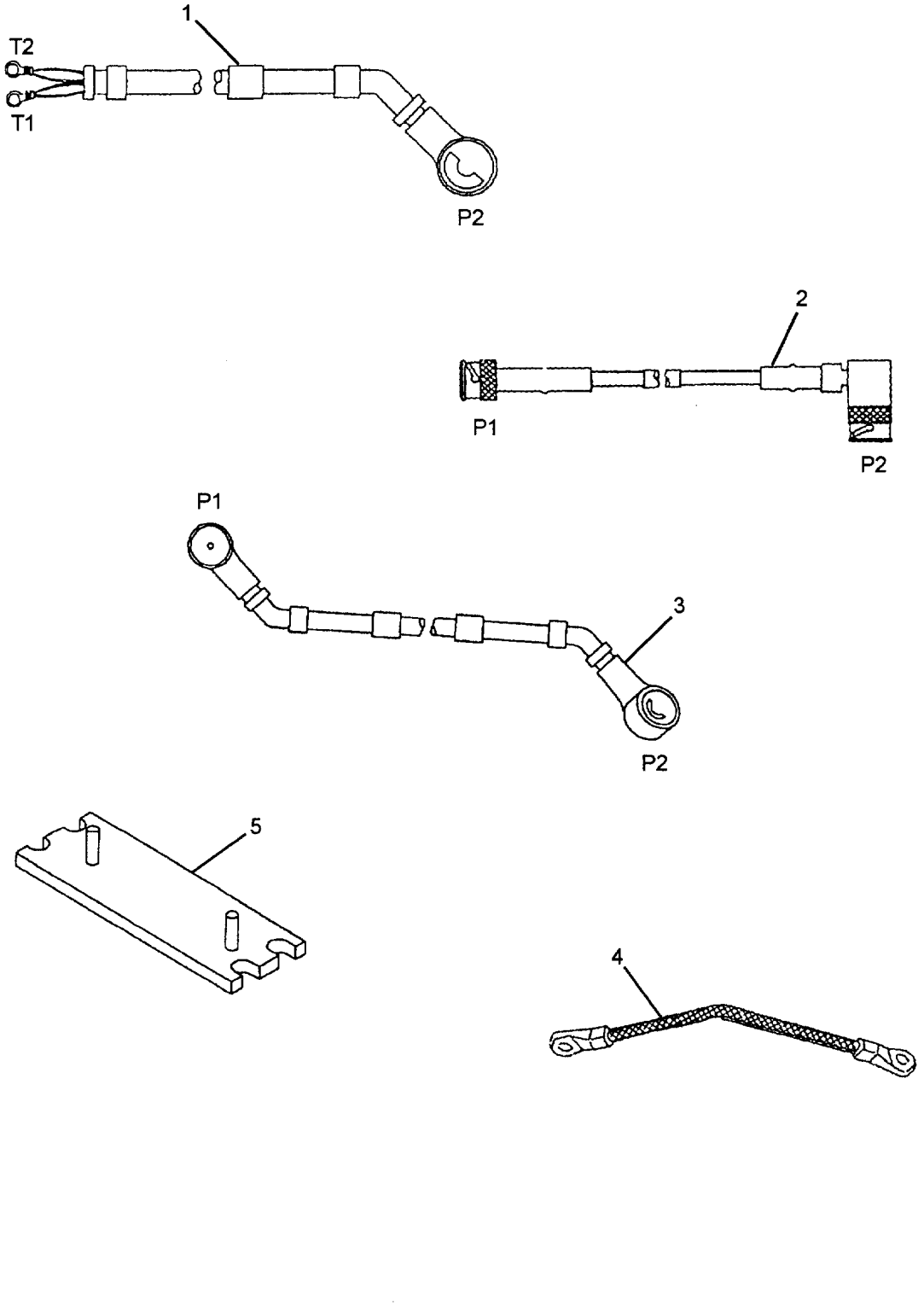

FIGURE 4. SPECIAL CABLES AND ACCESSORIES

6660-01-428-9218	METEOROLOGICAL STATION GROUP, AN/TMQ-49	EA

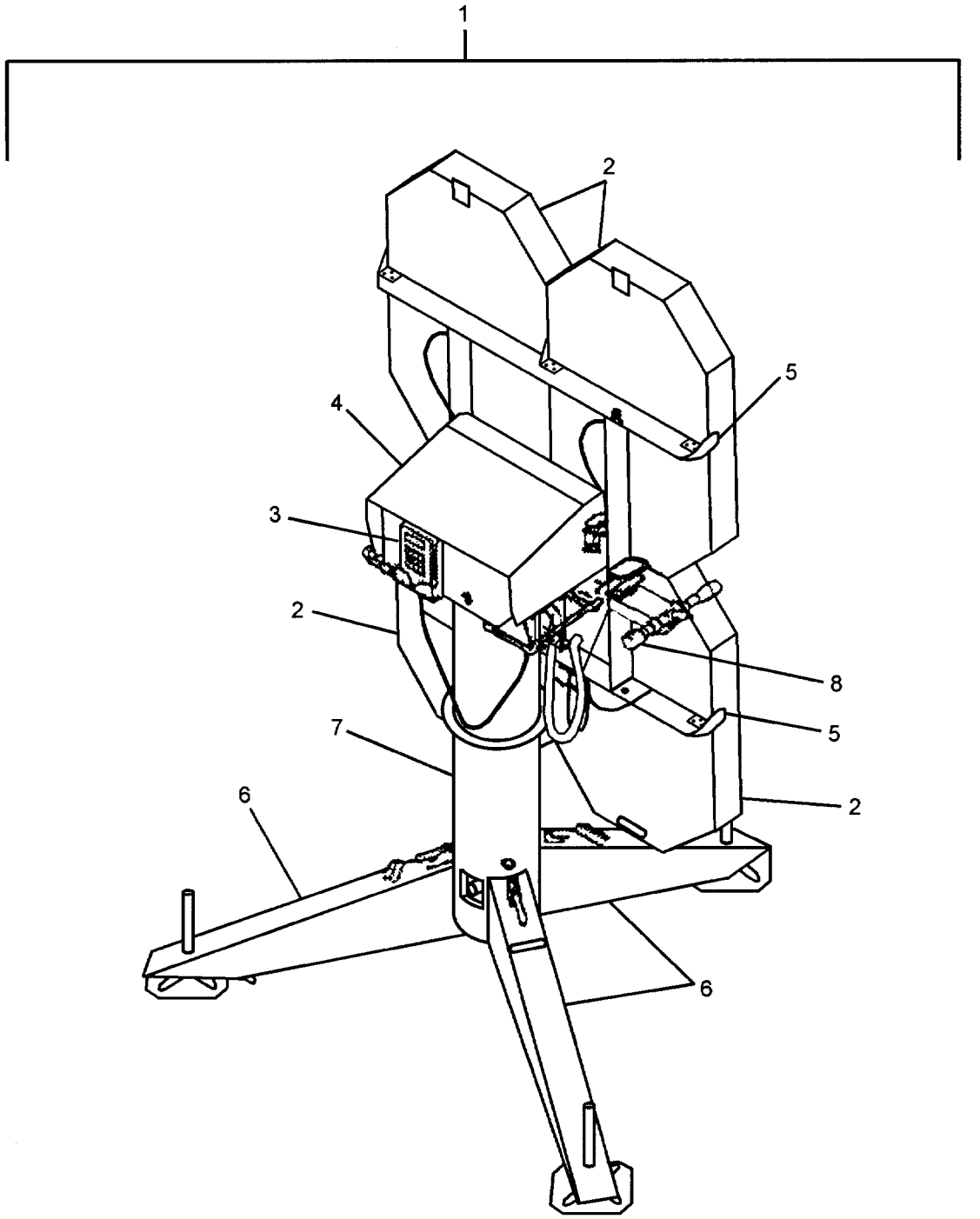

FIGURE 5. ANTENNA

INVENTORY SHEET

NAME OF EQUIPMENT METEOROLOGICAL STATION GROUP, AN/TMQ-49

ITEM NO	STOCK NUMBER	ITEM IDENTIFICATION	UNIT OF MEAS	QTY USED IN UNIT	MONTH												REMARKS
1		COMPUTER SYSTEM	EA	1													
		or															
2	7010-01-188-8051	COMPUTER SYSTEM	EA	1													
3	6115-01-449-6554	GENERATOR TRAILER	EA	1													
4	5895-01-416-2885	INSTALLATION KIT	EA	2													
5	5985-01-297-2971	2-ANTENNA	EA														
6	5995-01-428-6749	1-CABLE ASSEMBLY	EA														
7	5995-01-219-4703	1-CABLE ASSEMBLY	EA														
8	5995-01-300-9291	1-CABLE ASSEMBLY	EA														
9	5995-01-225-1659	1-CABLE ASSEMBLY	EA														
10	5995-01-219-7030	1-CABLE ASSEMBLY	EA														
11	5995-01-226-2442	2-CABLE ASSEMBLY	EA														
12	5995-01-300-9324	1-CABLE ASSEMBLY	EA														
13	5995-01-222-4209	1-CABLE ASSEMBLY	EA														
14	5995-01-219-7025	1-CABLE ASSEMBLY	EA														
15	4020-01-341-8795	2-FIBER ROPE	EA														
16	5965-00-043-3463	2-HANDSET	EA														
17	5965-01-222-1420	2-LOUDSPEAKER	EA														
18	5975-01-188-8873	1-MOUNTING BASE	EA														
19	5975-01-235-1962	1-MOUNTING BASE	EA														
20	5340-01-391-2740	2-PLATE	EA														
21	6660-01-443-2302	METEOROLOGICAL	EA	2													
22	5995-01-485-9264	1-CABLE ASSEMBLY	EA														
23	8115-01-487-8964	1-CASE SET	EA														
24	6350-01-486-0019	1-KEYPAD	EA														
25	6660-01-485-9262	1-METEOROLOGICAL	EA														
26	5985-01-395-5508	1-TRIPOD	EA														
27	5975-01-197-5505	MOUNTING BASE	EA	1													
28	5825-01-395-3513	NAVIGATION SET	EA	2													
29	5820-01-268-5105	RADIO SET	EA	2													
30	6660-01-445-4594	THEODOLITE	EA	1													
31	2330-01-372-5641	TRAILER	EA	2													
32	2320-01-146-7187	TRUCK	EA	3													

INVENTORY SHEET

NAME OF EQUIPMENT METEOROLOGICAL STATION GROUP, AN/TMQ-49

ITEM NO	STOCK NUMBER	ITEM IDENTIFICATION	UNIT OF MEAS	QTY USED IN UNIT	MONTH												REMARKS
33	6660-01-386-3906	METEOROLOGICAL	EA	1													
34	4120-00-916-9404	1-AIR CONDITIONER	EA														
35	5963-01-391-2714	1-AMPLIFIER	EA														
36	5985-01-308-8988	2-ANTENNA	EA														
37	5985-01-374-1650	1-ANTENNA	EA														
38	5985-01-375-4660	1-ANTENNA	EA														
39	5985-01-390-8684	1-ANTENNA	EA														
40	5895-00-985-9024	2-ANTENNA	EA														
41	5985-01-414-2372	1-ANTENNA	EA														
42	5985-00-733-6042	1-ANTENNA ELEMENT	EA														
43	5985-01-063-1574	2-ANTENNA ELEVATOR	EA														
44	5340-01-390-8687	1-BRACKET	EA														
45	5995-01-491-3081	2-CABLE ASSEMBLY	EA														
46	5995-01-390-8700	1-CABLE ASSEMBLY	EA														
47	5995-01-491-3080	1-CABLE ASSEMBLY	EA														
48	5995-01-391-2716	1-CABLE ASSEMBLY	EA														
49	5995-01-392-0044	1-CABLE ASSEMBLY	EA														
50	5995-01-392-0034	1-CABLE ASSEMBLY	EA														
51		2-CABLE REEL	EA														
52	6660-01-428-6751	1-COMPUTER	EA														
53	6130-01-380-5101	1-CONTROL	EA														
54	7025-01-428-6750	2-DISK DRIVE UNIT	EA														
55	7025-01-393-2453	2-DISK DRIVE UNIT	EA														
56	6110-01-391-2710	1-DISTRIBUTION BOX	EA														
57	4140-01-418-5519	1-FAN	EA														
58	5915-01-380-3934	1-FILTER ASSEMBLY	EA														
59	5820-01-263-1760	1-GROUNDING KIT	EA														
60	5895-01-225-0510	1-INSTALLATION KIT	EA														
61	5985-01-297-2971	1-ANTENNA	EA														
62	5995-01-274-5084	1-CABLE ASSEMBLY	EA														
63	5995-01-219-7035	1-CABLE ASSEMBLY	EA														
64	5995-01-219-4704	1-CABLE ASSEMBLY	EA														
65	4020-01-341-8795	1-FIBER ROPE	EA														
66	5965-00-043-3463	1-HANDSET	EA														

INVENTORY SHEET

NAME OF EQUIPMENT METEOROLOGICAL STATION GROUP, AN/TMQ-49

ITEM NO	STOCK NUMBER	ITEM IDENTIFICATION	UNIT OF MEAS	QTY USED IN UNIT	MONTH												REMARKS
67	5995-01-466-0693	1-LEAD ASSEMBLY	EA														
68	5965-01-222-1420	1-LOUDSPEAKER	EA														
69	5965-00-876-2375	1-LOUDSPEAKER	EA														
70	5975-01-188-8873	1-MOUNTING BASE	EA														
71	5340-01-391-2740	1-PLATE	EA														
72	5975-01-413-1547	1-SHELF	EA														
73	5440-01-449-6776	1-LADDER	EA														
74	7025-01-390-8682	1-PRINTER	EA														
75	5985-01-381-5668	1-RADIO	EA														
76	5985-01-390-8708	4-ANTENNA ELEMENT	EA														
77	5825-01-392-2215	1-CONTROL	EA														
78	5895-01-381-5106	1-CONVERTER	EA														
79	5985-01-390-8704	1-DRIVE	EA														
80		1-H-FRAME	EA														
81	5985-01-391-2720	3-PEDESTAL	EA														
82	5985-01-390-8703	1-PEDESTAL	EA														
83	6650-01-392-2204	1-TELESCOPE	EA														
84	5820-01-421-2605	1-RADIO SET	EA														
85	6660-01-380-3932	1-RECEIVING SET	EA														
86	5411-01-380-3936	1-SHELTER	EA														
87	5805-01-318-8421	1-TELEPHONE SET	EA														
88	5950-01-390-8709	1-TRANSFORMER	EA														
89	5985-01-395-5508	1-TRIPOD	EA														
90	6660-01-464-1555	METEOROLOGICAL	EA	1													
91	4730-00-831-4011	1-ADAPTER	EA														
92	4730-00-408-4628	1-ADAPTER	EA														
93	6660-00-663-8090	1-ANEMOMETER	EA														
94	6660-00-151-7772	50-BALLOON	EA														
95	6660-00-151-7773	50-BALLOON	EA														
96	6660-00-663-8154	50-BALLOON	EA														
97	6660-00-663-8159	60-BALLOON	EA														
98	6660-00-663-8158	50-BALLOON	EA														
99	6660-00-526-6041	30-BALLOON	EA														
100	6660-01-316-3652	1-BAROMETER	EA														

INVENTORY SHEET

NAME OF EQUIPMENT METEOROLOGICAL STATION GROUP, AN/TMQ-49

ITEM NO	STOCK NUMBER	ITEM IDENTIFICATION	UNIT OF MEAS	QTY USED IN UNIT	MONTH												REMARKS
101	6660-00-663-4629	1-CASE	EA														
102	6660-00-498-9631	1-CASE	EA														
103	6660-00-238-3044	2-NOZZLE	EA														
104	6685-01-136-2137	1-PSYCHROMETER	EA														
105	6660-00-223-5084	1-PSYCHROMETER	EA														
106	6660-00-640-9162	1-PSYCHROMETER	EA														
107	6685-00-515-4817	2-THERMOMETER	EA														
108	6685-00-533-5971	2-THERMOMETER	EA														
109	5180-00-408-1859	1-TOOL KIT	EA														
110	6675-00-301-1317	1-TRIPOD	EA														
111	4720-00-263-3306	12-TUBING	EA														
112	6660-01-464-2159	METEOROLOGICAL	EA	1													
113	4730-00-831-4011	2-ADAPTER	EA														
114	4730-00-408-4628	1-ADAPTER	EA														
115	6660-00-663-8090	1-ANEMOMETER	EA														
116	6660-00-515-4214	30-BALLOON	EA														
117	6660-00-914-2545	30-BALLOON	EA														
118	6660-00-936-8927	380-BALLOON	EA														
119	6660-01-316-3652	1-BAROMETER	EA														
120	6660-00-663-4629	1-CASE	EA														
121	6660-00-498-9631	2-CASE	EA														
122	6660-00-999-2663	1-INFLATION	EA														
123	6660-00-663-7924	1-NOZZLE	EA														
124	6660-00-238-3044	1-NOZZLE	EA														
125	6660-01-369-3187	370-PARACHUTE	EA														
126	6675-00-514-5575	1-POLE	EA														
127	6660-00-223-5084	1-PSYCHROMETER	EA														
128	6685-01-136-2137	1-PSYCHROMETER	EA														
129	6660-01-425-2624	100-RADIOSONDE SET	EA														
130	6660-01-340-7906	100-RADIOSONDE SET	EA														
131	6660-01-353-8793	170-RADIOSONDE SET	EA														
132	6660-00-356-5196	1-SHROUD	EA														
133	6685-00-515-4817	2-THERMOMETER	EA														

INVENTORY SHEET

NAME OF EQUIPMENT METEOROLOGICAL STATION GROUP, AN/TMQ-49

ITEM NO	STOCK NUMBER	ITEM IDENTIFICATION	UNIT OF MEAS	QTY USED IN UNIT	MONTH												REMARKS
134	6685-00-533-5971	2-THERMOMETER	EA														
135	5180-00-408-1859	1-TOOL KIT	EA														
136	6675-00-240-1881	1-TRIPOD	EA														
137	4720-00-242-6308	12-TUBING	EA														
138	4720-00-263-3306	12-TUBING	EA														
139	4820-00-620-6725	1-VALVE	EA														
140	6145-00-910-8847	CABLE	EA	AR													
141	6145-01-259-9203	CABLE	EA	AR													
142	1080-01-266-1827	CAMOUFLAGE	EA	AR													
143	1290-00-930-4260	COMPASS	EA	1													
144	4120-00-270-4512	EXTINGUISHER	EA	AR													
145	6545-00-922-1200	FIRST AID KIT	EA	AR													
146	5975-00-224-5260	ROD	EA	AR													
147	1080-00-108-1173	SUPPORT	EA	AR													
148	6135-00-985-7845	BATTERY	EA	AR													
149	6135-00-826-4798	BATTERY	EA	1													
150	6135-01-168-2944	BATTERY	EA	AR													
151	6135-00-900-2139	BATTERY	EA	AR													
152	8120-00-244-6981	CYLINDER	EA	AR													
153	5120-00-251-4489	HAMMER	EA	1													
154	6830-00-660-0027	HELIUM	CF	AR													
155	6260-01-074-4229	LIGHT	EA	1													
156	6260-01-074-4230	LIGHT	EA	1													
157	6645-01-106-4302	STOPWATCH	EA	AR													
158	4020-00-498-9565	TWINE	LB	AR													
159	9390-00-264-6158	WICK	EA	1													
160	5120-00-449-8083	WRENCH	EA	AR													
161	6135-00-835-7210	BATTERY	EA	AR													
162	6135-00-985-7845	BATTERY	EA	1													
163	6135-00-826-4798	BATTERY	EA	AR													
164	6135-00-900-2139	BATTERY	EA	AR													
165	8120-00-244-6981	CYLINDER	EA	AR													
166	5120-00-251-4489	HAMMER	EA	AR													
167	6830-00-660-0027	HELIUM	CF	AR													

INVENTORY SHEET

NAME OF EQUIPMENT METEOROLOGICAL STATION GROUP, AN/TMQ-49

ITEM NO	STOCK NUMBER	ITEM IDENTIFICATION	UNIT OF MEAS	QTY USED IN UNIT	MONTH												REMARKS
168	7510-01-199-8706	INK	EA	1													
169	6260-01-074-4229	LIGHT	EA	AR													
170	6260-01-074-4230	LIGHT	EA	AR													
171	7530-00-800-0996	PAPER	EA	2													
172	5120-01-013-1676	SLIDE HAMMER	EA	AR													
173	4020-00-498-9565	TWINE	LB	AR													
174	9390-00-264-6158	WICK	EA	AR													
175	5120-00-449-8083	WRENCH	EA	AR													